EIKI

Model No. LC-X800

U.S.A., Canada,
Europe, H.K

SERVICE MANUAL Multimedia Projector

ORIGINAL VERSION

Chassis No. KE8-X80000

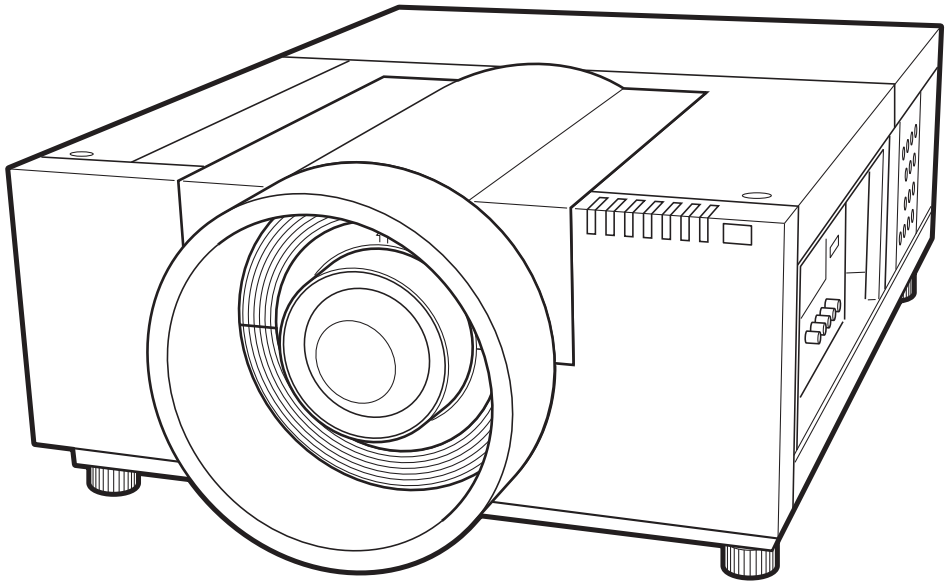

** Projection lens is optional.*

Give complete "Chassis No." for parts order or servicing, it is shown on the rating sheet on the cabinet on the projector.

FOREWORD

For your convenience, all service parts, identified in this manual are available through Eiki's normal distribution channels. In addition to service part number, the generic descriptions have been given, where possible, to allow your service technicians to substitute equivalent components which might be available from other sources.

All orders for service parts will be honored. However, in instances where generic components are considered to be available from several common sources, as would be the case with an industry standard fuse, resistor, or semiconductor, it may be more economical and expeditious to purchase the part locally.

PRODUCT CODE

1 122 506 01 (KE8B)
1 122 507 01 (LE8B)
1 122 507 06 (LE8G)

REFERENCE NO. SM5111208-00

Contents

SERVICE MANUAL 1
Contents 2
Safety Instructions 3
Safety Precautions 3
Product Safety Notice 3
Service Personnel Warning 3
Specifications 4
Circuit Protections 5
Fuse 5
Thermostats (SW903, SW904) 5
Mechanical sensor switches (SW902, SW6581) 6
Temperature sensors, wind sensors and thermistor 7
Power failure and fan lock detection 8
Maintenance 9
Filter Instructions 9
Replacing the Filter Cartridge 10
Resetting the Filter Counter 11
Resetting the Scroll Counter 11
Lamp Management 12
Lamp Replacement 13
Resetting the Lamp Counter 14
Checking the projector used time and lamp used time 14
Quick Maintenance 15
Cleaning the optical parts 16
Cleaning the Projection Lens 16
Cleaning the Projector Cabinet 16
Security Function Notice 17
Lens Mounting 18
Mechanical Disassembly 22
Mechanical disassembly flow chart 22
Mechanical disassembly 23
Optical Parts Disassembly 39
Adjustments 50
Adjustments after Parts Replacement 50
Note on Main Board Replacement 50
Optical Adjustments 51
Optical adjustment location 51
Before Adjustment 52
1. Optical Center adjustment 54
2. PBS adjustment 58
3. Contrast adjustment 59
4. Back focus adjustment 60
5. Convergence adjustment 61
Adjustment 64
Electrical Adjustments 65
Service Adjustment Menu Operation 65
Circuit Adjustments 66
Test Points and Locations 70
Service Adjustment Data Table 71
Chassis Description 111
Chassis over view 111
Boards Connection 112
Troubleshooting 113
No Picture 113
No Power 118
Power Supply and Power Fail Detection 119
Power failure detection tree (1/2) 120
Power failure detection tree (2/2) 121
Power (DC) power supply system 122
Fan Control System 123
Temperature Abnormality 124
Power Lens and Shutter System and Abnormality 125
Lamp Abnormality 126
Power failure detection system 127
Error information table 127
Error History Log 128
Diagnosis of Power Failure with RS-232C port 129
Diagnosis procedure 129
Indicators and Projector Condition 130
Serial Control 133
Serial Control Interface 133
Control Port Functions 135
Waveform 141
IC Block Diagrams 142
Parts Location Diagrams 147
Mechanical Parts List 161
Electrical Parts List 163

Diagrams & Drawings A1
Parts description and reading in schematic diagram A2
Schematic Diagrams A3
Printed Wiring Board Diagrams A13
Pin description of diode, transistor and IC A23
Note on Soldering A24

Safety Instructions

Safety Precautions

WARNING:
The chassis of this projector is isolated (COLD) from AC line by using the converter transformer. Primary side of the converter and lamp power supply unit circuit is connected to the AC line and it is hot, which hot circuit is identified with the line (⚡) in the schematic diagram. For continued product safety and protection of personnel injury, servicing should be made with qualified personnel.

The following precautions must be observed.

1: An isolation transformer should be connected in the power line between the projector and the AC line before any service is performed on the projector.

2: Comply with all caution and safety-related notes provided on the cabinet back, cabinet bottom, inside the cabinet or on the chassis.

3: When replacing a chassis in the cabinet, always be certain that all the protective devices are installed properly, such as, control knobs, adjustment covers or shields, barriers, etc.

DO NOT OPERATE THIS PROJECTOR WITHOUT THE PROTECTIVE SHIELD IN POSITION AND PROPERLY SECURED.

4: Before replacing the cabinet cover, thoroughly inspect the inside of the cabinet to see that no stray parts or tools have been left inside.

Before returning any projector to the customer, the service personnel must be sure it is completely safe to operate without danger of electric shock.

Product Safety Notice

Product safety should be considered when a component replacement is made in any area of the projector. Components indicated by mark ⚠ in the parts list and the schematic diagram designate components in which safety can be of special significance. It is, therefore, particularly recommended that the replacement of there parts must be made by exactly the same parts.

Service Personnel Warning

Eye damage may result from directly viewing the light produced by the Lamp used in this equipment. Always turn off Lamp before opening cover. The Ultraviolet radiation eye protection required during this servicing.
Never turn the power on without the lamp to avoid electric-shock or damage of the devices since the stabilizer generates high voltages (15kV - 25kV) at its starts.
Since the lamp is very high temperature during units operation replacement of the lamp should be done at least 45 minutes after the power has been turned off, to allow the lamp cool-off.

Specifications

Mechanical Information

Projector Type	Multi-media Projector
Dimensions (W x H x D)	20.87" x 10.55" x 29.8" (530 mm x 268.1 mm x 757 mm) (Not including projections)
Net Weight	60.85 lbs (27.6 kg)
Feet Adjustment	0˚ to 2.8˚

Panel Resolution

LCD Panel System	1.8" TFT Active Matrix type, 3 panels
Panel Resolution	1,024 x 768 dots
Number of Pixels	2,359,296 (1,024 x 768 x 3 panels)

Signal Compatibility

Color System	PAL, SECAM, NTSC, NTSC4.43, PAL-M, and PAL-N
High Definition TV Signal	480i, 480p, 575i, 575p, 720p, 1035i, and 1080i
Scanning Frequency	H-sync. 15 kHz–120 kHz, V-sync. 48 Hz–120 Hz

Optical Information

Projection Lamp	330 W NSHA lamp x 2

Interface

Input 1	DVI-D Terminal (Digital), Mini D-Sub 15-pin Terminal (Analog)
Input 2	BNC Type x 5 (VIDEO/Y/G, B/Pb/Cb, R/Pr/Cr, H/HV and V), S-Video
Other Jacks	Serial port in (D-sub 9), Serial port out (D-sub 9), USB port, and Wired Remote Jack

Power

Voltage and Power Consumption	AC 100–120 V (11.2A Max. Ampere), 50/60 Hz (The U.S.A and Canada)
	AC 200-240 V (5.1A Max. Ampere), 50/60 Hz (Continental Europe and The H.K.)

Operating Environment

Operating Temperature	41˚F–104˚F (5˚C–40˚C)
Storage Temperature	14˚F–140˚F (-10˚C–60˚C)

Remote Control

Battery	AA or LR6 Type x 2
Operating Range	16.4' (5 m/±30˚)
Dimensions	1.97" (W) x 1.06" (H) x 6.61" (D) (50 mm x 27 mm x 168 mm)
Net Weight	4.6 oz (129 g) (including batteries)

- The specifications are subject to change without notice.
- LCD panels are manufactured to the highest possible standards. Even though 99.99% of the pixels are effective, a tiny fraction of the pixels (0.01% or less) may be ineffective by the characteristics of the LCD panels.

C UL US LISTED

This symbol on the nameplate means the product is Listed by Underwriters Laboratories Inc. It is designed and manufactured to meet rigid U.L. safety standards against risk of fire, casualty and electrical hazards.

Circuit Protections

This projector provides the following circuit protections to operate in safety. If the abnormality occurs inside the projector, it will automatically turn off by operating one of the following protection circuits.

Fuse

A fuse is located inside of the projector. When the LAMP/ READY indicators are not lightning, the fuse may be opened. Check the fuse as following steps.
The fuse should be used with the following type;

Fuse Part No. : 323 028 4202
TYPE 15.0A 400V FUSE
SOC CORP. SHV14 15A N4

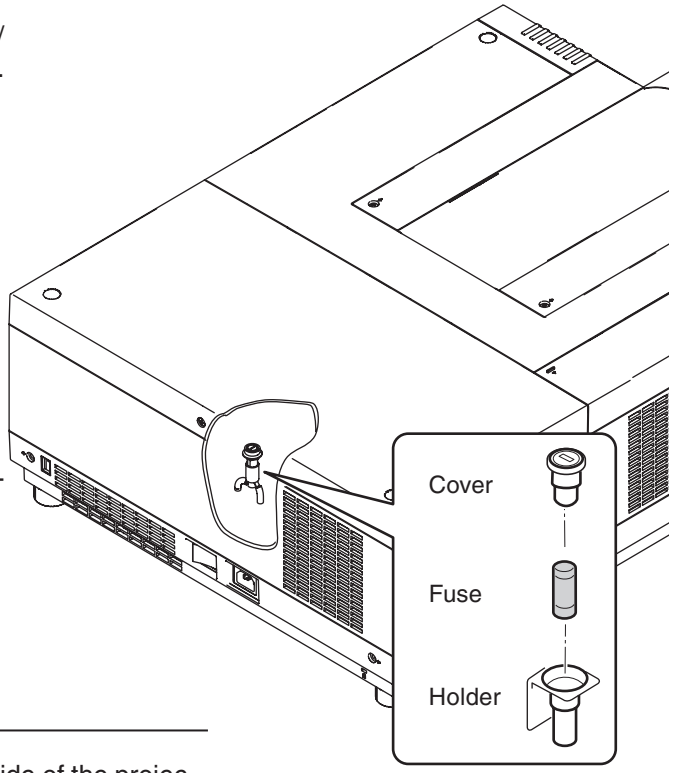

How to replace the fuse

1. Remove the cabinet top following to "Mechanical disassembly".
2. Remove the cover and fuse from fuse holder.

To install the fuse, take reversed step in the above.

Thermostats (SW903, SW904)

There are the thermostat switches (SW903 and SW904) inside of the projector to detect the internal temperature rising abnormally. When the internal temperature reaches near 100˚C, the thermostat opens to stop the operation of the power supply circuit.
The thermostat will automatically return to normal condition when the internal temperature becomes normal.

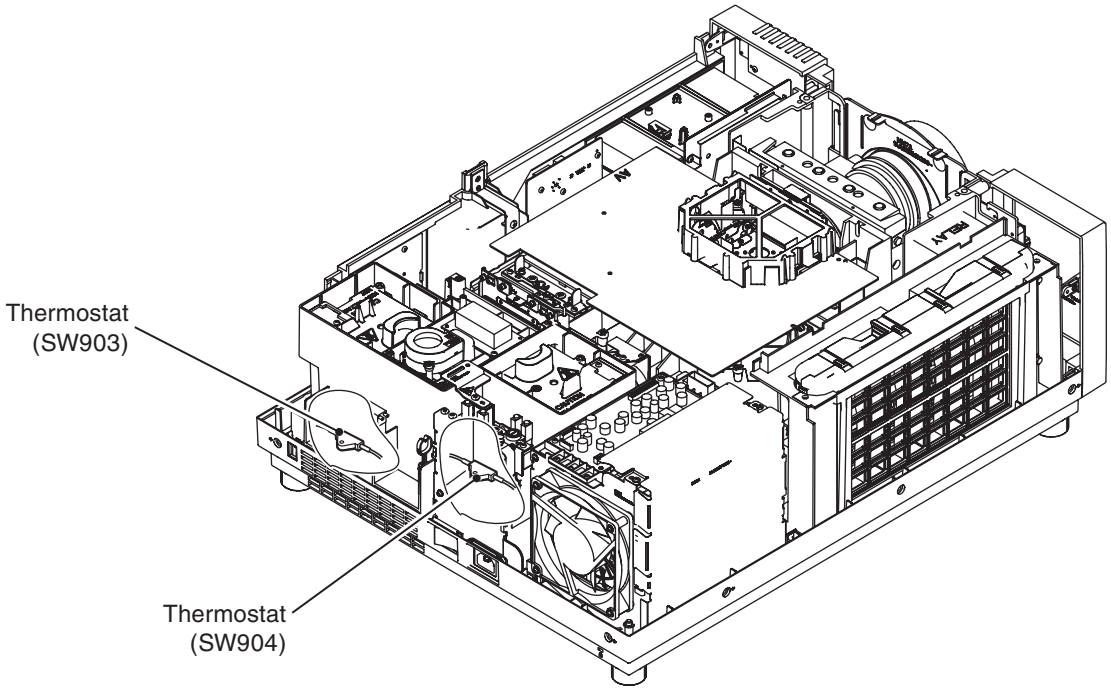

Mechanical sensor switches (SW902, SW6581)

This projector provides 2 mechanical sensor switches, the one is for filter cartridge sensor switch (SW6581) and the other one is for lamp cover sensor switch (SW902). The filter cartridge sensor switch detects whether the filter cartridge is installed correctly. If the filter cartridge is not installed correctly, the projector cannot turn on.
The lamp cover sensor switch detects whether the lamp cover is closed securely. If lamp cover is opened or not closed completely, the drive signal to the lamp circuit is cut off. After opening the lamp cover for replacing the lamp ass'y, place the lamp cover correctly otherwise the projector cannot turn on.

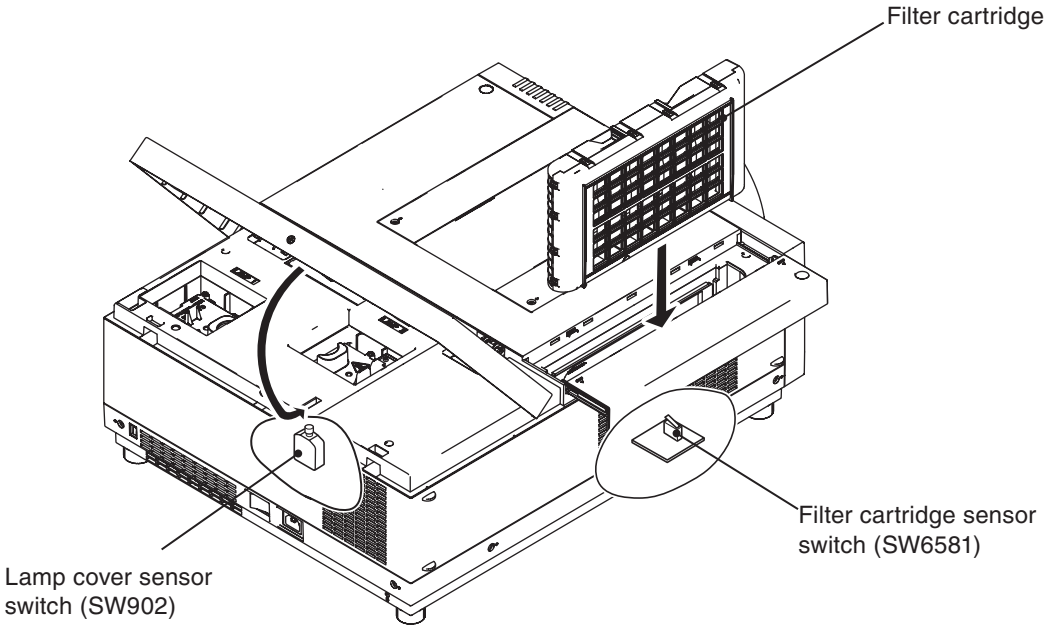

The projector is shut down; and the LAMP indicator is lighting and other indicators are blinking.

When the projector detects an abnormal condition (SW902, SW903, SW904 - opens, or SW6581 - opens), it will be automatically shut down to protect the inside of the projector and the LAMP indicator lights on and other indicators blink. In this case, unplug the AC power cord and check that the filter cartridge and lamp cover are installed securely, and the plug it, and turn on the projector once again to verify operation. If the projector cannot be turned on and these indicators are still lighting and blinking, unplug the AC power cord. See the troubleshooting chapter.

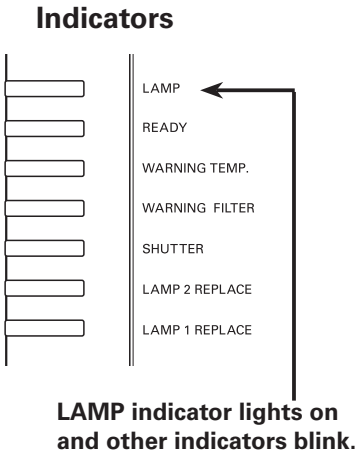

CAUTION
DO NOT LEAVE THE PROJECTOR WITH THE AC POWER CORD CONNECTED UNDER AN ABNORMAL CONDITION. IT MAY RESULT IN FIRE OR ELECTRIC SHOCK.

Temperature sensors, wind sensors and thermistor

The projector provides 2 temperature sensor ICs, 1 sensor on the Main board and 1 sensor on the Sensor board, and 1 wind sensor on the intake duct 1 thermistor on the blue polarized glass unit. The sensor ICs monitor surrounding temperature of the panels/prism, and surrounding temperature of the intake duct, and the wind sensor monitors airflow passed through the air filter in the intake duct.
- Thermistor (TH901) on the blue polarized glass.
- Temperature sensor (IC2541) on the main board for monitoring the surrounding temperature of panels/prism.
- Temperature sensor (IC8811) on the sensor board for monitoring the surrounding temperature of the intake duct.
- Wind sensor (S901) on the filter box.

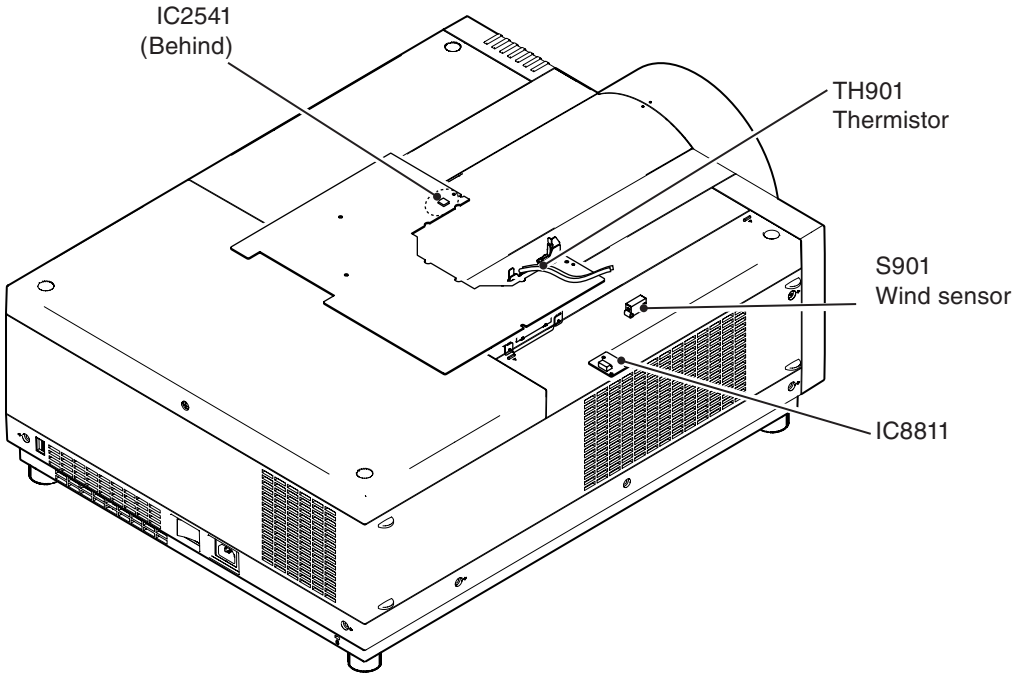

The projector is shut down and the WARNING TEMP. indicator is blinking red.

When the temperature inside the projector reaches a certain level, the projector will be automatically shut down to protect the inside of the projector. The LAMP indicator turns red brighter and the WARNING TEMP indicator blinks while the projector is being cooled down. When the projector has cooled down enough (to its normal operating temperature), it can be turned on again by pressing the ON/STAND-BY button.

Indicators

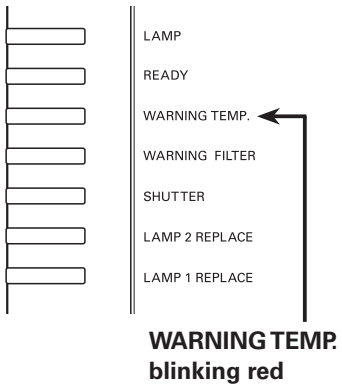

✔Note:
- The WARNING TEMP. indicator continues to blink even after the temperature inside the projector returns to normal. When the projector is turned on again, the WARNING TEMP. indicator stops blinking.

Power failure and fan lock detection

The projector provides the detection circuits of the power failure and the fan lock. When the detection circuit detects an error at the power supply line or at the fan operation circuit, the projector will turn into the standby mode to protect the other circuits defective.

The projector is shut down; and the LAMP indicator is lighting and other indicators are blinking.

When the projector detects an abnormal condition (Power supply lines failure or fans failure), it will be automatically shut down to protect the inside of the projector and the LAMP indicator lights on and other indicators blink. In this case, unplug the AC power cord and plug it, and then turn on the projector once again to verify operation. If the projector cannot be turned on and these indicators are still lighting and blinking, unplug the AC power cord. See the troubleshooting chapter.

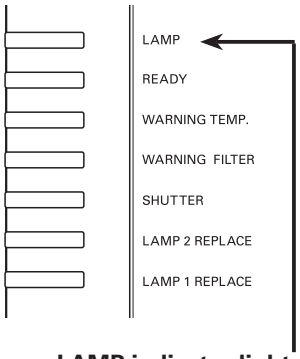

LAMP indicator lights on and other indicators blink.

CAUTION
DO NOT LEAVE THE PROJECTOR WITH THE AC POWER CORD CONNECTED UNDER AN ABNORMAL CONDITION. IT MAY RESULT IN FIRE OR ELECTRIC SHOCK.

Maintenance

Filter Instructions

Filter prevents dust from accumulating on the optical elements inside the projector. Should the filter becomes clogged with dust particles, it will reduce cooling fans' effectiveness and may result in internal heat buildup and adversely affect the life of the projector. This projector has an electrically operated filter which helps you to replace the filter easily. The projector monitors the condition of the filter at all time and replaces a filter with a new one automatically when it detects the clogging.

If the projector reaches a time set in the timer setting (p. 56), a Filter replacement icon (Fig.1) appears on the screen and the WARNING FILTER indicator on the top panel lights up. When you see this icon, replace the filter as soon as possible. If the filter is out of scroll and the projector reaches a time set in the timer setting, Fig. 2 appears on the screen, indicating that the filter cartridge replacement is necessary.

When the filter scroll is counted down to 1, the Last scroll icon (Fig.3) appears on the screen, indicating that there is one scroll left in the filter cartridge.

If the projector detects that the filter is clogged and no scroll is left in the filter cartridge, a Filter cartridge replacement icon (Fig. 4) appears on the screen and the WARNING FILTER indicator on the top panel lights up. When you see this icon, replace the filter cartridge and reset the Filter counter and the Scroll counter.

When the filter is being scrolled by the remote control or the Filter control function in the setting menu, a Filter replacement icon and "Please wait..." message (Fig.5) appear on the screen and the WARNING FILTER indicator blinks slow (approx. 2 seconds ON, 2 seconds OFF).

The WARNING FILTER indicator blinks fast when the projector detects an abnormal condition, the filter cartridge is not installed properly, or the filter scroll is not working properly.

Fig.1 Filter replacement icon

Fig.2

Fig.3 Last scroll icon

Fig.4 Filter cartridge replacement icon

Fig.5 Filter replacement icon and "Please wait..." message.

✔Note:

- Fig.1, Fig.2, Fig.3 or Fig. 4 will not appear when the Display function is set to "Off", or during "Freeze".
- The filter cannot be rewound.
- The filter can be scrolled 9 times since the filter cartridge has 10 scrolls.
- The filter cartridge is disposable. Do not clean and reuse the filter cartridge.
- Do not expose the filter cartridge to water or liquid, or it may cause a breakdown.
- Replace the filter cartridge after all the scroll is used up. If you replace the filter cartridge when there are some scrolls left in the filter cartridge, the filter counter and the scroll counter do not recognize the correct number of remaining scrolls and the reset function cannot work properly. It may cause a breakdown.
- The used part of the filter can be seen on the edge of the Filter cartridge after scrolling the filter, but there is no problem for the use of the projector.
- Do not use the filter cartridge with other projector. The filter counter and the scroll counter do not recognize the correct number of remaining scrolls of the used filter cartridge and the reset function cannot work properly. It may cause a breakdown.
- Make sure that the projection lamps are turned off when you are replacing the filter cartridge. If you replace the filter cartridge when the projection lamps are turned on, the projector will be shut down automatically for safety purposes.
- Do not forget to reset the filter counter and the scroll counter in the setting menu after replacing the filter cartridge. If you forget to reset the filter counter and the scroll counter, the projector cannot recognize the correct number of remaining scrolls and it may cause a breakdown.
- When the projector is kept used for 3 minutes without getting the filter cartridge replaced after the Fig.4 appears on the screen, the projector is turned off automatically to prevent the damage of optical components.

Replacing the Filter Cartridge

1. Turn off the projector, press the Main On/Off Switch to Off and unplug the AC power cord from the AC outlet.
2. First, clean up the dust on the projector and around the air vents.
3. Slide and open the Filter cover. (See the right figure.)
4. Pull out the filter cartridge by holding the finger grip.
5. Put the new one back into the position and close the filter cover. Make sure that the filter cartridge is properly and fully inserted.
6. Connect the AC power cord to the projector and turn on the projector.
7. Reset the filter counter and the scroll counter.

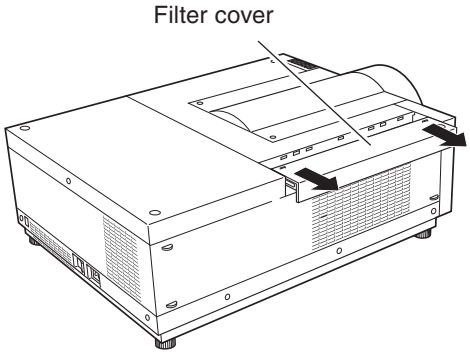

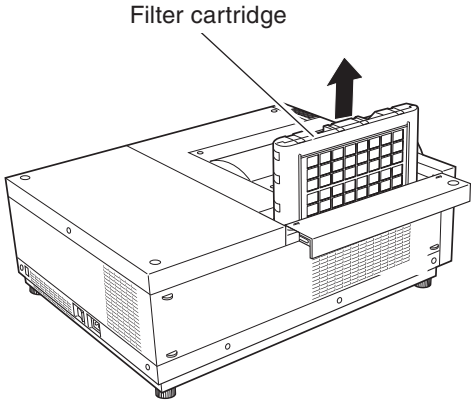

CAUTION
Make sure the filter cartridge is inserted in the projector. If the filter cartridge is not inserted, the projector cannot be turned on.
Do not put anything into the air vents. Doing so may result in malfunction of the projector.

RECOMMENDATION
We recommend avoiding dusty/smoky environments when operating the projector. Usage in these environments may cause a poor image quality.

When using the projector under dusty or smoky conditions, dust may accumulate on a lens, liquid crystal panels, or optical elements inside the projector. Such condition may degrade the quality of the projected image.
When the symptoms above are noticed, contact your authorized dealer or service station for proper cleaning.

ORDER REPLACEMENT FILTER CARTRIDGE

Type No.:	**POA-FIL-180**
Service Parts No. :	**610 335 9830**

Resetting the Filter Counter

Be sure to reset the Filter counter after replacing the filter cartridge.

1 Press the MENU button to display the On-Screen Menu. Use the Point ◀▶ buttons to move the red frame pointer to the Setting Menu icon.

2 Use the Point ▲▼ buttons to move the red frame pointer to Filter counter and then press the SELECT button. A dialog box appears showing the Used time option and the Scrolls remaining option. Use the Point ▲▼ buttons to select Used time.

3 Used time shows the total accumulated time of the filter use, a timer setting option, and the Reset option. Select Reset and the "Filter counter Reset?" appears. Select [Yes] to continue.

4 Another confirmation dialog box appears, select [Yes] to reset the Filter counter.

Filter counter

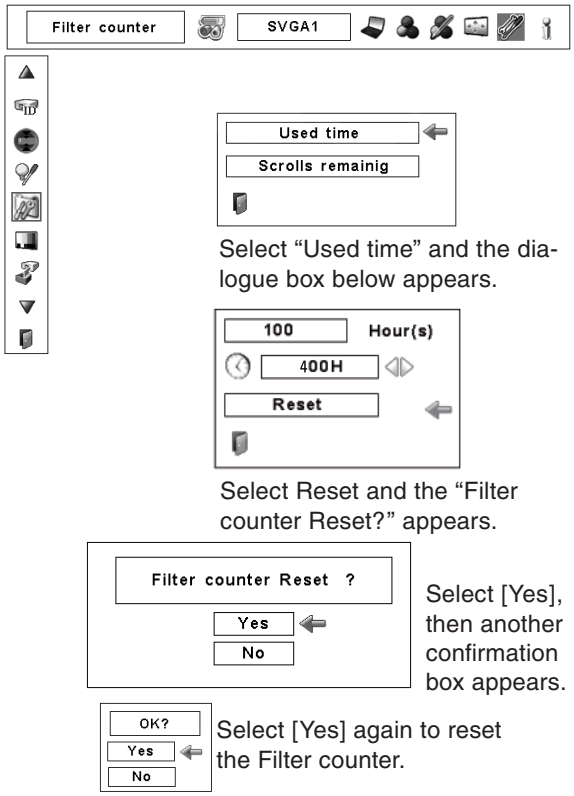

Select "Used time" and the dialogue box below appears.

Select Reset and the "Filter counter Reset?" appears.

Select [Yes], then another confirmation box appears.

Select [Yes] again to reset the Filter counter.

Resetting the Scroll Counter

Be sure to reset the Scroll counter after replacing the filter cartridge.

1 Press the MENU button to display the On-Screen Menu. Use the Point ◀▶ buttons to move the red frame pointer to the Setting Menu icon.

2 Use the Point ▲▼ buttons to move the red frame pointer to Filter counter and then press the SELECT button. A dialog box appears showing the Used time option and the Scrolls remaining option. Use the Point ▲▼ buttons to select Scroll(s) remaining.

3 Scroll(s) remaining shows the number of the remaining scrolls and the Reset option. Select Reset and the "Scroll counter Reset?" appears. Select [Yes] to continue.

4 Another confirmation dialog box appears, select [Yes] to reset the Scroll counter.

Scroll counter

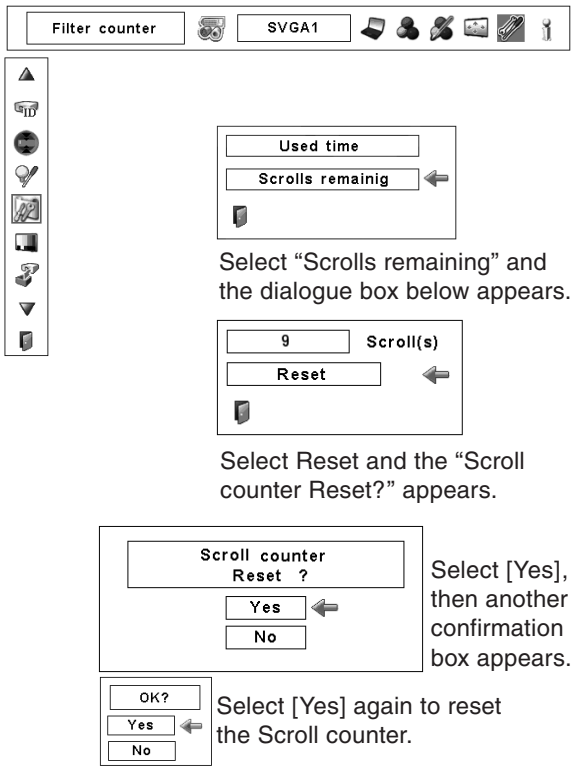

Select "Scrolls remaining" and the dialogue box below appears.

Select Reset and the "Scroll counter Reset?" appears.

Select [Yes], then another confirmation box appears.

Select [Yes] again to reset the Scroll counter.

Note:

- While the scroll counter reset is in progress, "Please wait..." message appears on the screen, the cooling fans operate and the filter cartridge is adjusted.

Lamp Management

This Projector is equipped with 2 Projection Lamps to ensure brighter image and those lamps are controlled by the Lamp Management Function. The Lamp Management Function detects the status of lamps and shows the status on screen or on the LAMP 1/2 REPLACE indicators. This function also automatically controls the Lamp Mode when any of lamps is out for the end of life or malfunctions.

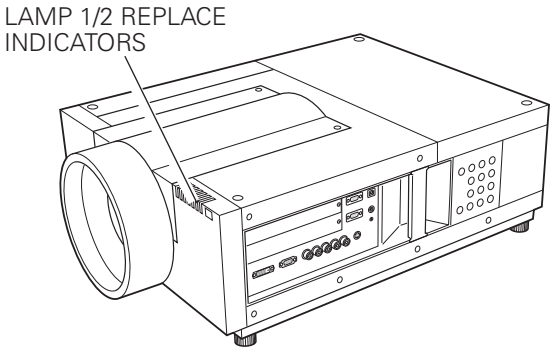

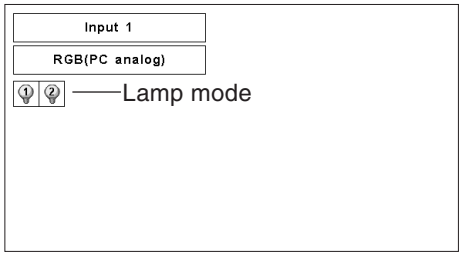

Lamp 1/2 Replace Indicators

The LAMP 1/2 REPLACE indicators light orange when any of Projection Lamps is nearing its end, and flash when any of them becomes out. Check the number of lamp on the Lamp Status Display or the LAMP 1/2 REPLACE indicators and replace the lamp.

Lamp Status Display

The Lamp Status Display appears on screen when the projector is turned on or the input position (input 1, input 2, Input 3 or input 4) is switched. This shows the status of each lamp as; ON, OFF, NEAR END, or OUT. Refer to the following for each status.

LAMP STATUS DISPLAY

Yellow Lamp – – – – – – – Projection Lamp lights normally.

Dim Lamp – – – – – – – – – Projection Lamp is turned off.

Red Lamp – – – – – – – – – Projection Lamp is nearing its end. When the image becomes darker or the color becomes unnatural, replace lamp. (LAMP 1/2 REPLACE indicator lights orange.)

X Mark on Lamp – – – – – (LAMP 1/2 REPLACE indicator flashes orange.) Projection lamp is defective or fails to be turned on. Restart the projector on, and make sure lamp is on. If this mark still appears, replace lamp corresponding with number marked X.

Lamp Mode Changeover

The Lamp Management Function automatically changes the lighting lamp (Lamp Mode) by detecting the status of lamp. When either of the 2 lamps is out, the projector operates with 1 lamp. The Lamp Mode can be switched to 2 lamps or 1 lamp manually. Refer to the SETTING section on page 51.

2 LAMP MODE

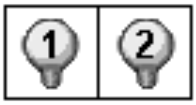

1 LAMP MODE

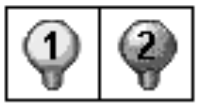

When Lamp 1 is burnt out.

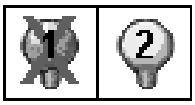

When Lamp 2 is burnt out.

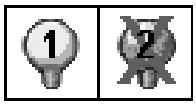

Lamp Replacement

When the projection lamp of the projector reaches its end of life, the Lamp replacement icon appears on the screen and LAMP 1/2 REPLACE indicator lights orange. Replace the lamp with a new one promptly. The timing when the LAMP 1/2 REPLACE indicators should light is depending on the lamp mode.

Indicators

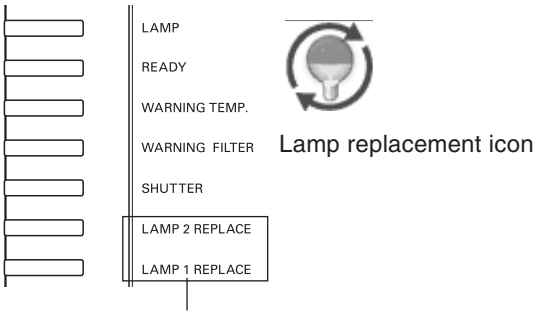

LAMP 1 / 2 REPLACE indicators

✔Note:
•The Lamp replacement icon will not appear when the Display function is set to “Off”, or during “Freeze”.

WARNING:
TURN OFF THE UV LAMP BEFORE OPENING THE LAMP COVER.

Allow the projector to cool, for at least 45 minutes before you open Lamp Cover. The inside of the projector can become very hot.

CAUTION

For continued safety, replace with a lamp assembly of the same type.
Do not drop the lamp assembly or touch a glass bulb! The glass can shatter and may cause injury.

Follow these steps to replace the lamp.

1. Check the number of lamp to be replaced on the Lamp Status Display.
2. Turn off the projector, press the Main On/Off Switch to Off and unplug the AC power cord from the AC outlet. Let the projector cool for at least 45 minutes.
3. Loosen a screw on the Lamp Cover. Slide and open the Lamp Cover until it makes a clicking sound. (See the right figure.)
4. Loosen two screws and pull out the Lamp to be replaced by grasping handle.
5. Replace the Lamp with a new one and tighten two screws. Make sure the Lamp is set properly.
6. Put the Lamp Cover back and tighten a screw.
7. Connect the AC Power Cord to the projector and turn on the projector.
8. Reset the Lamp Replacement Counter. (Refer to section "Resetting the Lamp Counter" on page 62.)

NOTE : Do not reset LAMP REPLACEMENT COUNTER when lamp is not replaced.

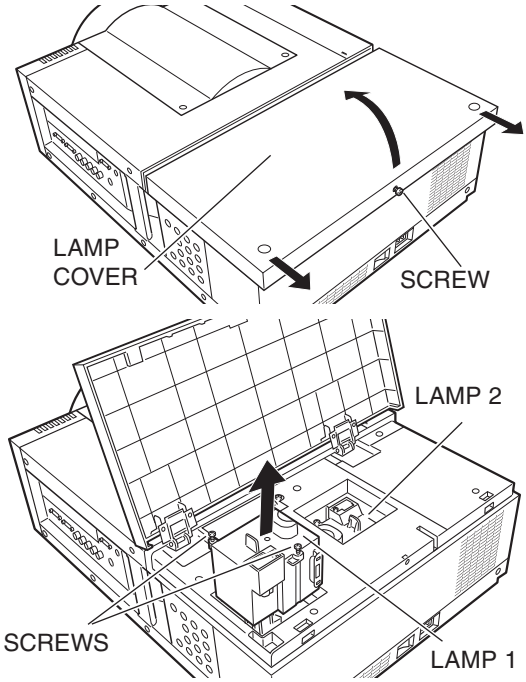

Make sure which number of lamp needs to be replaced on Lamp Status Display.
Figure shows case of replacing LAMP 1.

CAUTION : DO NOT OPERATE THE PROJECTOR WHILE ANY OF LAMPS IS REMOVED. IT MAY RESULT IN MALFUNCTIONS, FIRE HAZARD, OR OTHER ACCIDENTS.

NOTES ON LAMP REPLACEMENT
To maintain quality of picture (better balance of color and brightness in entire screen), we recommend replacing both 2 lamps at a time.

Resetting the Lamp Counter

Be sure to reset the Lamp counter after the lamp is replaced. When the Lamp counter is reset, the LAMP 1/2 REPLACE indicator stops lighting and the Lamp replacement icon disappears.

1 Press the MENU button to display the On-Screen Menu. Use the Point ◀▶ buttons to move the red frame pointer to the Setting Menu icon

2 Use the Point ▲▼ buttons to move the red frame pointer to Lamp counter and then press the **SELECT** button. A dialog box appears. Select a lamp and the "Lamp replacement counter Reset?" appears. Select [Yes] to continue.

3 Another confirmation dialog box appears and select [Yes] to reset the Lamp counter.

✔Note:
•Do not reset the Lamp counter without replacing the lamp. Be sure to reset the Lamp counter only after replacing the lamp.

Lamp counter

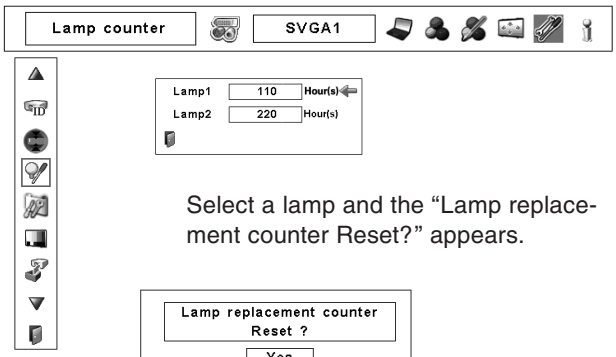

Select a lamp and the "Lamp replacement counter Reset?" appears.

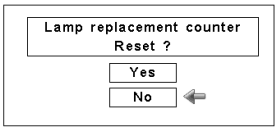

Select [Yes], then another confirmation box appears.

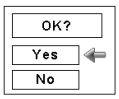

Select [Yes] again to reset the lamp counter.

ORDER REPLACEMENT LAMP

Replacement Lamp Type No.	:	**POA-LMP128**
Service Parts No.	:	**610 341 9497**

Checking the projector used time and lamp used time

The LAMP REPLACE indicator will light yellow when the total lamp used time (Corresponding value) reaches 3,000 hours. This is to indicate that lamp replacement is required.
The total lamp used time is calculated by using the below expression,
Total lamp used time (Corresponding value) = **T***eco* + (**T***normal* x 1.5)

T*eco*: used time in the Eco mode
T*normal* : used time in the Normal mode and Auto mode

You can check the lamp used time following to the below procedure.
1 Press and hold the **ON/STAND-BY** button on the projector or the remote control for more than 20 seconds.
2 The projector used time and lamp used time will be displayed on the screen briefly as follows.

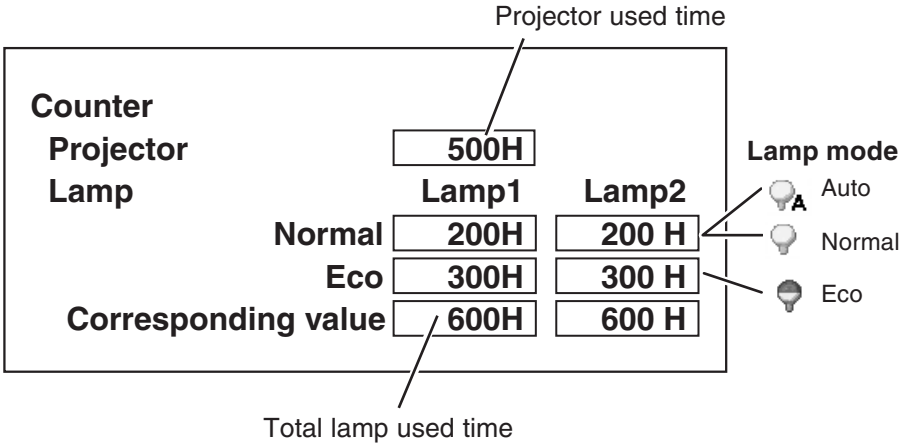

Quick Maintenance

This projector provides a cabinet front cover and lamp cover on the cabinet top to enhance the service maintenance. This enables service personnel to align the optical adjustment or replace the optical parts without disassembly the cabinet top.

Quick access to the Projection lens unit, LCD/Prism ass'y, Polarized glass ass'y.

1 Turn the Cabinet Front Ring anti-clockwise and pull it forward to remove.

2 Remove 2 screws-A and loosen 2 screws-B, and pull the cabinet front cover-A forward.

You can access the projection lens unit, LCD/ Prism ass'y and Polarized glass ass'y quickly.

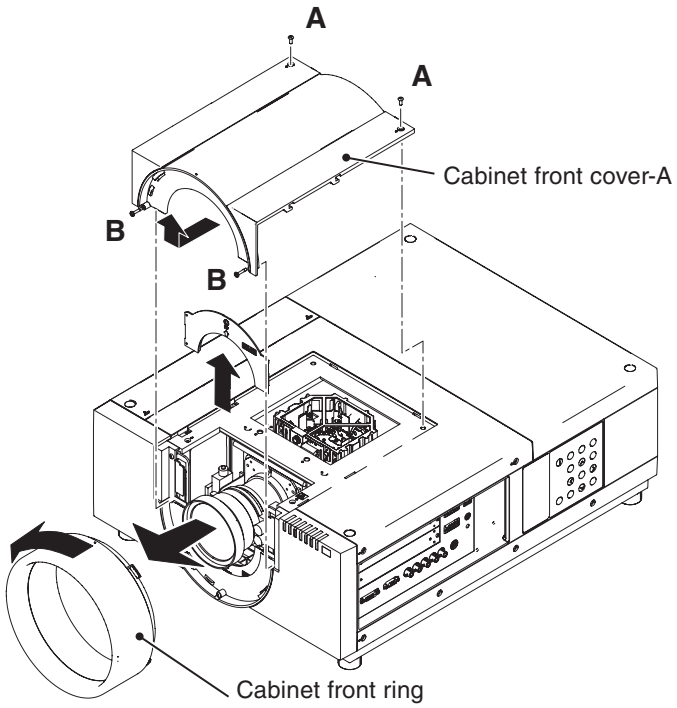

Quick access to the PBS/Integrator lens ass'y

1 Loosen 1 screw-A on the Lamp Cover. Slide and open the Lamp Cover until it makes a clicking sound.

2 Remove 1 screws-B and take the PBS Cover.

You can access the PBS/Integrator lens ass'y quickly.

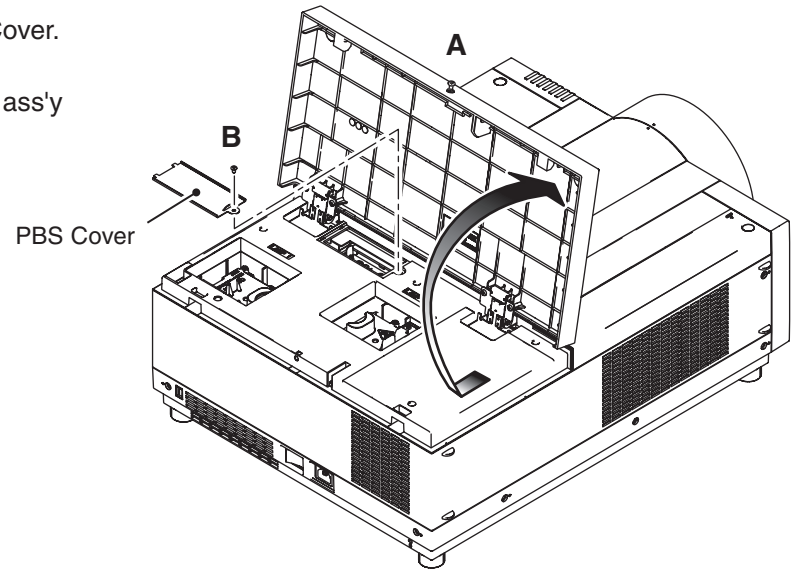

Cleaning the optical parts

After long periods of use, dust and other particles will accumulate on the LCD panel, prism, mirror, polarized glass, lens, etc., causing the picture to darken or color to blur. If this occurs, clean the inside of optical unit.
Remove dust and other particles using air spray. If dirt cannot be removed by air spray, disassemble and clean the optical unit.

Cleaning with air spray

Remove the cabinet top following to “Mechanical Disassembly”. Clean up the LCD panel and polarizing plate by using the air spray from the cabinet top opening.

Caution:
Use a commercial (inert gas) air spray designed for cleaning camera and computer equipment. Use a resin-based nozzle only. Be very careful not to damage optical parts with the nozzle tip. Never use any kind of cleanser on the unit. Also, never use abrasive materials on the unit as this may cause irreparable damage.

Disassembly Cleaning

Disassembly cleaning method should only be performed when the unit is considerable dirty and cannot be sufficiently cleaned by air spraying alone.
Be sure to readjust the optical system after performing disassembly cleaning.

1. Remove the cabinet top and main units following to “Mechanical Disassembly”.
2. Remove the optical base top following to “Optical Unit Disassembly”. If the LCD panel needs cleaning, remove the LCD panel unit following to “LCD panel replacement”.
3. Clean the optical parts with a soft cloth. Clean extremely dirty areas using a cloth moistened with alcohol.

Caution:
The surface of the optical components consists of multiple dielectric layers with varying degrees of refraction. Never use organic solvents (thinner, etc.) or any kind of cleanser on these components.
Since the LCD panel is equipped with an electronic circuit, never use any liquids (water, etc.) to clean the unit. Use of liquid may cause the unit to malfunction.

Cleaning the Projection Lens

Turn off the projector, press the Main On/Off Switch to Off and unplug the AC power cord from the AC outlet before cleaning.

Gently wipe the projection lens with a cleaning cloth that contains a small amount of non-abrasive camera lens cleaner, or use a lens cleaning paper or commercially available air blower to clean the lens.

Avoid using an excessive amount of cleaner. Abrasive cleaners, solvents, or other harsh chemicals might scratch the surface of the lens.

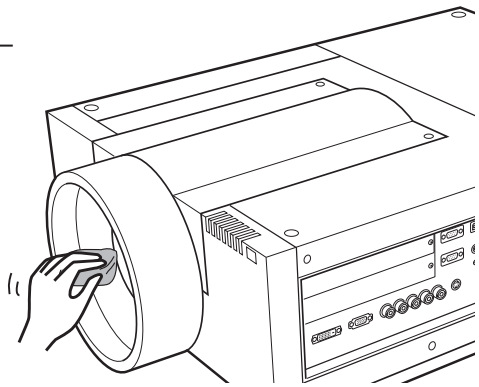

Cleaning the Projector Cabinet

Turn off the projector, press the Main On/Off Switch to Off and unplug the AC power cord from the AC outlet before cleaning.

Gently wipe the projector body with a soft dry cleaning cloth. When the cabinet is heavily soiled, use a small amount of mild detergent and finish with a soft dry cleaning cloth. Avoid using an excessive amount of cleaner. Abrasive cleaners, solvents, or other harsh chemicals might scratch the surface of the cabinet.

When the projector is not in use, put the projector in an appropriate carrying case to protect it from dust and scratches.

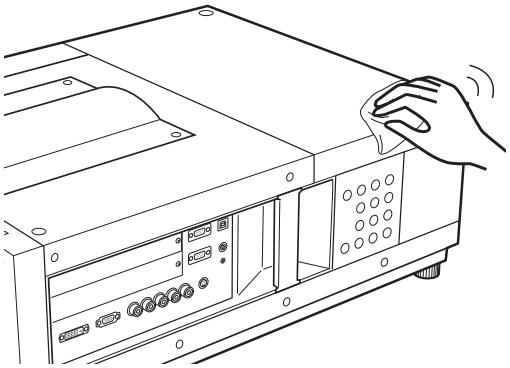

Security Function Notice

This projector provides security functions such as "Key lock", "PIN code lock" and "Logo PIN code lock". When the projector has set these security function on, you are required to enter correct PIN code to use the projector. If you do not know the correct PIN code to the projector, the projector can no longer be operated or started. In this case, you must reset those function first according to the resetting procedure described below and then check up on the projector.

Function	Description
Key lock	Locks operation of the side control or the remote control. If the Key lock is enabled with side control lock, the projector can no longer be started. *Initial setting: Key lock function is disabled*
PIN code lock	Prevents the projector from being operated by an unauthorized person. *Initial code: "1234"*
Logo PIN code lock	Prevents an unauthorized person for changing the start-up logo on the screen. *Initial code: "4321"*

Resetting procedure

1 Turn off the projector with the Mains switch.

2 As pressing the **SELECT** button on the projector, turn on the projector with the Mains switch. Keep pressing the **SELECT** button until the READY indicator lights continuously.

This is complete the resetting of the security function. The PIN code lock and Logo PIN code lock are reset as the initial PIN code at the factory and the Key lock function is disabled.

Please refer to the owner's manual for further information of the security functions.

LCD PROJECTOR Model No. LC-X7/X8/X800 and LC-W5
LENS REPLACEMENT AND INSTALLATION PROCEDURE

Be sure to consult with a qualified service personnel.

When installing or replacing the Projection Lens, refer to this manual. For installation of the lens, use the parts specified in this manual.
Do not use the installation manual and Light-Block Sheets in the optional lens package.
Check the following parts supplied to this projector.

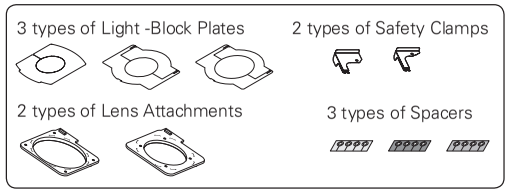

AVAILABLE LENS

The lenses listed below are designed for use with the LC-X7/X8/X800 and LC-W5 (when applicable).

Part No.	Code No.	Type	Zoom	Focus	Projector Model No.	
					LC-X7/X8/X800	LC-W5
AH-21012	LNS-W01Z	Wide Fixed Lens	Fixed	Manual	OK	OK
AH-21202	LNS-W02Z	Wide Zoom Lens	Motor Driven	Motor Driven	OK	OK
AH-32021	LNS-W03	On-Axis Wide Fixed Lens	Fixed	Manual	OK	OK
AH-32401	LNS-W04	Wide Zoom Lens	Motor Driven	Motor Driven	OK	OK
AH-32501	LNS-W05	Wide Zoom Lens	Motor Driven	Motor Driven	N/A	OK
AH-32601	LNS-W06	Wide Zoom Lens	Motor Driven	Motor Driven	OK	OK
AH-32701	LNS-W07	On-Axis Wide Fixed Lens	Fixed	Manual	N/A	OK
AH-21102	LNS-S02Z	Standard Zoom Lens II	Motor Driven	Motor Driven	OK	OK
AH-22051	LNS-S03	Standard Zoom Lens III	Motor Driven	Motor Driven	OK	OK
AH-21022	LNS-M01Z	Semi-Long Throw Zoom Lens	Motor Driven	Motor Driven	OK	OK
AH-21091	LNS-T02	Long Zoom Lens	Motor Driven	Motor Driven	OK	OK
AH-32581	LNS-T03	Ultra-Long Zoom Lens	Manual	Manual	OK	OK

⚠ DO NOT USE THE OPTIONAL LENS BELOW FOR LC-X7/X8/X800 AND LC-W5.
OTHERWISE DAMAGES MAY RESULT.
LENS PART NO. : **AH-21031 (LNS-T01)**

⚠ LENS INSTALLATION PRECAUTIONS

- Lens installation and replacement should be made by a qualified service personnel.
- Be sure to install the lens by following this procedure precisely.
- Do not touch or remove any parts except the lens and related parts. It may result in malfunctions, electrical shock, fire hazard or other accidents.
- Before installing or replacing the lens, check that the Part No. of the Projection Lens matches to the projector.
- When moving or setting up the projector, be sure to replace the Lens Cover to protect the surface. And be careful not to hold or subject the lens to strong forces. Otherwise the lens, cabinet, or mechanical parts may damage.
- For details of the lens and installation, contact the sales dealer where you purchased the projector.

LENS REPLACEMENT AND INSTALLATION PROCEDURE

The installation procedure and needed parts for lens installation varies on Optional Lens. Check the Part No. of the Optional Lens and be sure to install or replace the lens by following the procedure below.

1 Remove the safety lens cap on the rear of the lens (mounting side). Insert the Lens Attachment and secure with the four (4) screws (supplied). (See Fig. 1.)

Connect the Lens Motor Lead to the socket on the top right of the Lens Attachment. (Motor Driven Lens only) (See Fig. 2)

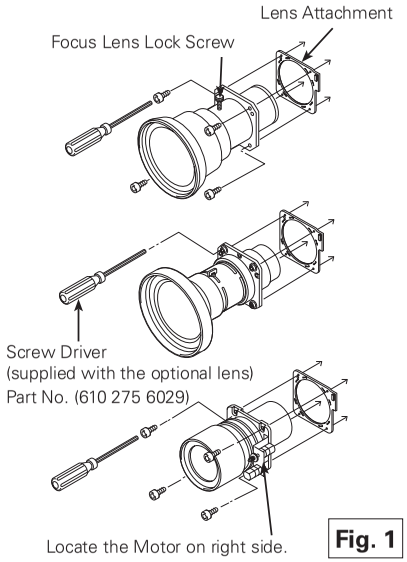

Fig. 1

Lens Attachment for each Lens.

Lens Attachment Type No. (PART No.)	Lens Part No.
Lens Attachment 01 AH-25841 (910 303 8743)	AH-21012, AH-21202, AH-32021, AH-32401, AH-32501, AH-32601, AH-32701, AH-21091, AH-32581, AH-21102, AH-22051, AH-21022
Lens Attachment 02 AH-25871 (910 304 6229)	AH-21201, AH-21021, AH-21041

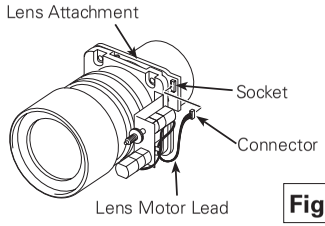

Fig. 2

2 Turn off the projector, press the Main On/Off Switch to Off and unplug the AC power cord from the AC outlet.

3 Turn the Lens Mount Cover counter-clockwise and take it off by pulling forward. (See Fig. 3)

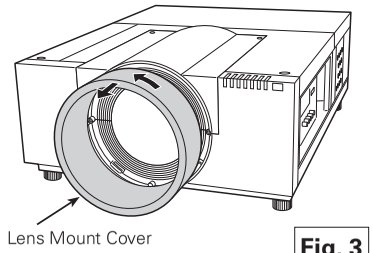

Fig. 3

4 Remove 2 Screws **A** and loosen 2 Screws **B**. Slide the Top Cover forward to take off. (See Fig. 4)

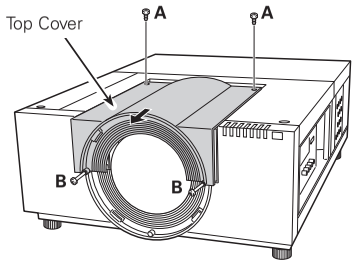

Fig. 4

5 Remove the Cover Plate by lifting upwards. (See Fig. 5)

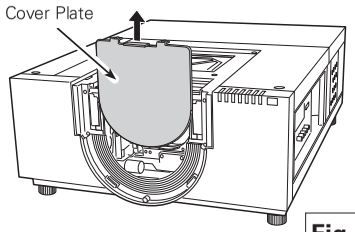

Fig. 5

6 The LC-X7/LC-X8LC-W5 can use three (3) different types of Light-Block Plates, use the Light-Block Plate that corresponds to the appropriate optional lens. (Refer to the list below.)

NOTE:
- Make sure the shape of the Light-Block Plate(s) is correct.
- Make sure the mark (UP/DOWN and FRONT/BACK) on Light-Block Plates are correct and set them properly.
- Use 2 Light-Block Plates for AH-32021.

Light-Block Plate for each Lens

Light-Block Plate Type No. (PART No.)	Lens Part No.
Type FK2A (610 337 0064)	AH-21102, AH-22051, AH-32581, AH-21012, AH-32401, AH-32501, AH-32601
Type FK2B (610 337 0224)	AH-21022, AH-21091, AH-21202, AH-32701, AH-32021
(610 335 4545)	AH-32021

NOTE:
- The Light-Block Plate FK2A and FK2B are separated to the upper and lower plates.

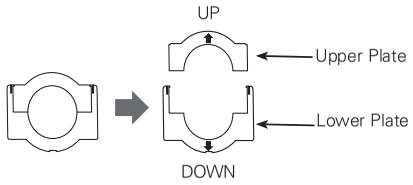

7 Insert the lower Light-Block Plate. (See Fig. 6.)

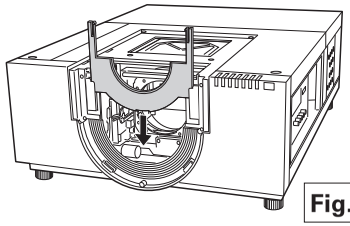

Fig. 6

8 Grasp (release lock) the Lens Lock Lever and turn it fully upward. (See Fig. 7) Install the Lens into the projector. Grasp the Lens Lock Lever and turn the Lever fully downward until lever is Locked (clicked position) properly. (See Fig. 8) When installing the Motor Driven Lens, be sure to mount Lens Motor on right side. (See Fig. 1)
After installing the lens, make sure the Lens is not loose and properly installed.

LENS LOCK RELEASE

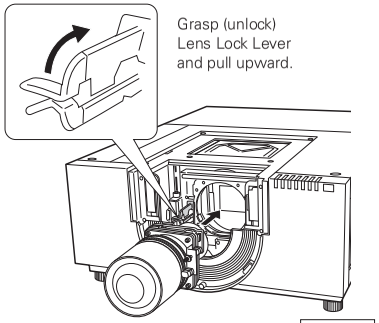

Fig. 7

LENS LOCK

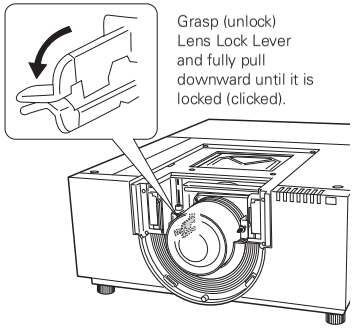

Fig. 8

9 Adjust focus of the Projection Lens. (AH-21012, AH-32021 and AH-32701 only.)

Set up the projector and project image on a screen. Loosen the Focus Lens Lock Screw and rotate the Projection Lens to obtain proper focus. After adjusting focus, be sure to lock the Projection Lens with the Focus Lens Lock Screw securely. (See Fig. 1)

Adjust focus of the Projection Lens Part No. AH-32021 and AH-32701 following the Focus Adjustment on page 6.

10 To ensure that the lens is securely fixed to the projector when mounting, be sure to attach the provided Safety Clamp. There are two different types of Safety Clamps depending on the lens of the projector. Check the Part No. of the lens before attaching the Safety Clamp and use a Safety Clamp that matches to the lens.

1 Remove the screw holding the lens. (See Fig.9-1/10-1)

2 Insert the removed screw to the Safety Clamp.

3 Place the Safety Clamp in the location of the removed screw. Make sure that the Safety Clamp is mounted to hold the Lens Lock Lever in the lock position. Check the placement of the Safety Clamp. (See Fig. 9-2/10-2)

Safety Clamp Type No. (PART No.)	Lens Part No.
Type SC-A (610 332 3759)	AH-21102, AH-22051, AH-21022, AH-21091, AH-32581, AH-21012, AH-21202, AH-32021, AH-32401, AH-32501, AH-32601, AH-32701
Type SC-B (610 322 3742)	AH-21201, AH-21021, AH-21041

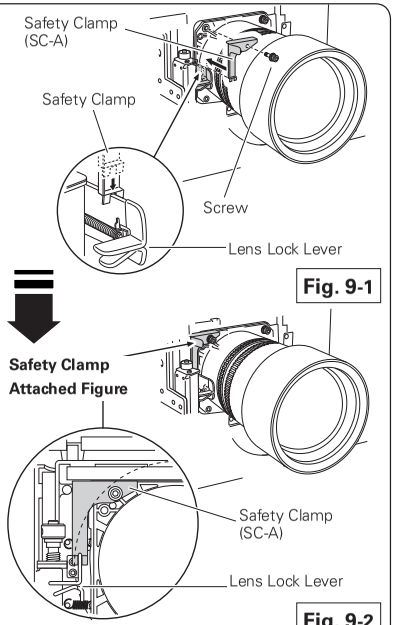

Fig. 9-1

Fig. 9-2

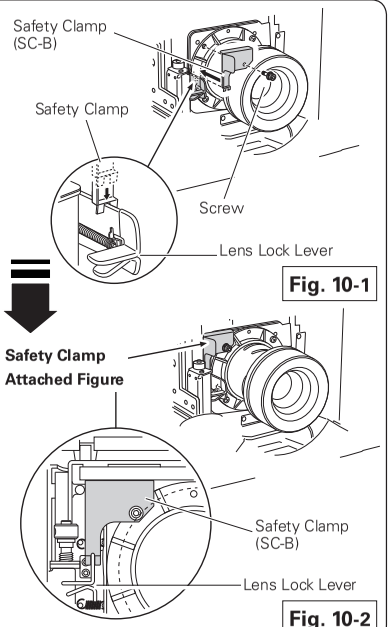

Fig. 10-1

Fig. 10-2

11 Install the Upper Light-Block Plate into the guide of Lower Light-Block Plate. (See Fig. 11)

Note:
- When installing the Upper Light-Block Plate, the Lower Light-Block Plate should be lifted upward with your hand.
- Make sure the mark (UP/DOWN and FRONT/BACK) on Light-Block Plate(s) is correct and set them properly.

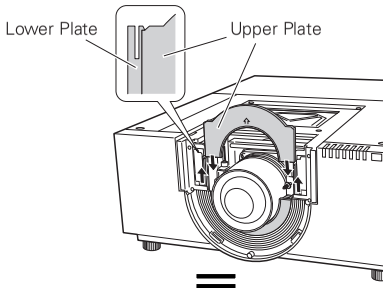

Fig. 11

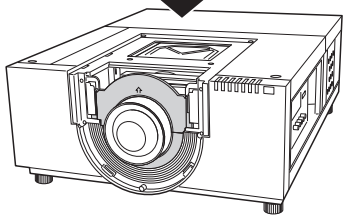

Fig. 12

12 Replace and fix the Top Cover with two (2) Screws **A** and 2 screws **B**. (See Fig. 14)

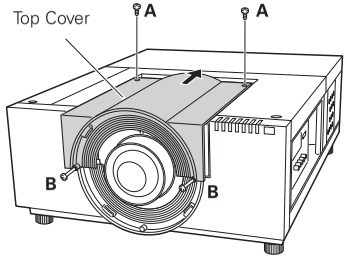

Fig. 14

13 Fit the raised dot of the Lens Mount Cover to the leftmost edge of the Label on the projector, and then turn the Lens Mount Cover clockwise and adjust the position of the raised dot to the one of the projector. (See Fig. 15)

Note: If not mounted properly, the Lens Mount Cover may fall, causing hazards or injury.

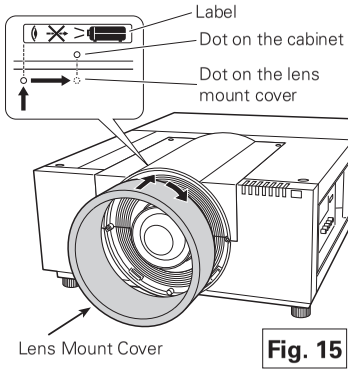

Fig. 15

When using No. AH-32021

- When installing No. AH-32021, use two (2) Light-Block Plates. Make sure the figure is correct and put in proper position. (See Fig.13)

❶ Before mounting the Light-Block Plate (No. 610 335 4545), turn the projector on and move the projected image to the most upper left with the lens shift function. Then turn the projector off.

❷ Insert the Light-Block Plate (No. 610 335 4545) in the direction shown in the figure to the right. The Light-Block Plate should encircle the lens. Rotate the Light Block Plate counter clockwise until the convex side is in a downward position.

Note: The side with "THIS SIDE BACK" must face backward.

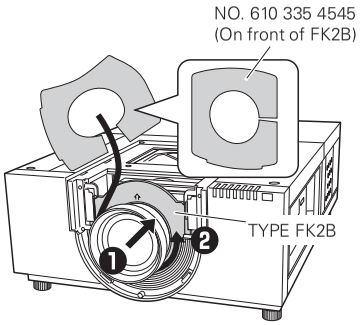

Fig. 13

14 Turn the projector on and operate Lens shift, Zoom and Focus fully to check the Light-Block Plates. If Light-Block Plate(s) interferes with those operations, check the Light-Block Plate(s) is set properly.

> ⚠ **CAUTION :** Do not operate the projector with Light-Block Plate(s) removed. Doing so may result in malfunction of the projector.

FOCUS ADJUSTMENT

No. AH-21012, AH-32021 and AH-32701

Set up the projector and project image on the screen.

1. Loosen the Focus Lock Screw on the lens.
2. Rotate the lens to obtain proper focus on center area of the screen.

When the distance between the screen and lens is 1 meter, set ● mark (yellow) of the lens on Focus Lock Screw position. (This is only for No. AH-32021.)

3. Lock the Focus Lock Screw securely.

When proper focus is not observed at outer area of the screen, proceed the following adjustments.

4. Loosen the Focus Lock Ring on the lens. (Turn the Lock Ring counter-clockwise.)
5. Rotate the lens to obtain proper focus on outer area of the screen.
6. Lock the Focus Lock Ring securely. (Turn the Lock Ring clockwise.)

If proper focus is not observed over the entire screen, repeat above adjustments 1~ 6.

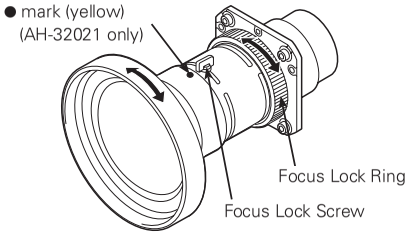

No. AH-32581

Adjust zoom first and then adjust focus.

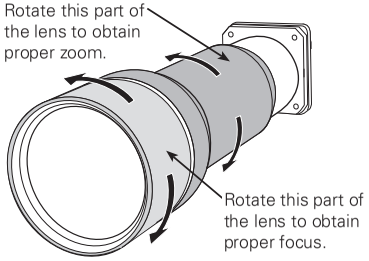

FOCUS CORRECTION

When the lens is attached to the projector and images are being projected onto the screen, the peripheral focus may be out of focus in some localized areas. If this happens, insert the one, of three sizes of spacers, in between the Lens Attachment and the lens to adjust the focus.
Inserting the Spacer corrects the distance on the Lens Adjustment and improves the diagonal focus.
The corrected distance is determined by the thickness of the used spacers. As a guide, the distance is adjusted by approximately 30 mm for each 0.1-mm thickness of the spacers.
There are three types of spacers provided, and there are four of each spacer type. Use these spacers to correct the distance as required.

	Spacer "1" Color; Clear Thickness; 0.1 mm	Correction distance 30 mm/for 60-inch projection
	Spacer "2" Color; Black Thickness; 0.2 mm	Correction distance 60 mm/for 60-inch projection
	Spacer "3" Color; Cream Thickness; 0.3 mm	Correction distance 90 mm/for 60-inch projection

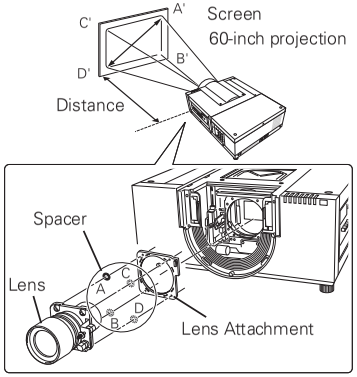

> **BE SURE TO CHECK FOR SAFETY**
> After installing or replacing the lens, be sure to check the following for safety.
> 1. Check the lens is securely fixed with the screws.
> 2. Check no wiring is damaged or tangled on the gear of the lens motor or the other mechanical parts.
> 3. Check no part is missing, and no mounting part is loose.

Some parts are not used for installation or replacement. Keep these parts for later use.

Note: Figures in this manual may differ from the actual product.

SPECIFICATIONS (Throw distance and screen size, lens shift ratio) for LC-X7/X8/X800

NOTE: Following table shows approximate measurement. Actual measurement depends on lens and projectors.

Part No.	Zoom	SCREEN SIZE (INCH) AND THROW DISTANCE (m)														LENS SHIFT/CENTER RATIO			
		40	60	80	100	120	150	180	200	250	300	350	400	500	600	U/D (MAX)		SIDE(MAX)	
																H1	H2	W1	W2
AH-21012 (LNS-W01Z)	NONE	0.9	1.4	1.9	2.4	2.9	3.6	4.4	4.9	6.1	7.4	8.6	9.9	12.3	14.8	1	8	2	3
AH-21202 (LNS-W02Z)	TELE	1.4	2.2	2.9	3.7	4.4	5.6	6.7	7.5	9.3	11.2	13.1	15.0	18.8	22.5	1	8	2	3
	WIDE	1.1	1.7	2.2	2.8	3.4	4.3	5.1	5.7	7.2	8.6	10.1	11.5	14.4	17.3				
AH-32021 (LNS-W03)	NONE	0.6	0.9	1.3	1.6	1.9	2.4	2.9	3.3	4.1	4.9	5.8	6.6	8.3	9.9	1	1	1	1
AH-32401 (LNS-W04)	TELE	1.6	2.4	3.2	4.1	4.9	6.2	7.4	8.3	10.4	12.5	14.5	16.7	20.9	N/A	1	8	1	1
	WIDE	1.2	1.8	2.4	3.1	3.7	4.7	5.7	6.3	7.9	9.5	11.1	12.7	15.9	N/A				
~~AH-32501 (LNS-W05)~~	TELE	N/A	N/A	N/A	N/A	N/A	N/A	N/A	N/A	N/A	N/A	N/A	N/A	N/A	N/A	N/A	N/A	N/A	N/A
	WIDE	N/A	N/A	N/A	N/A	N/A	N/A	N/A	N/A	N/A	N/A	N/A	N/A	N/A	N/A				
AH-32601 (LNS-W06)	TELE	1.2	1.8	2.4	3.1	3.7	4.7	5.6	6.2	7.8	9.4	11.0	12.6	15.8	N/A	1	8	1	1
	WIDE	0.9	1.4	1.9	2.4	2.9	3.6	4.4	4.8	6.0	7.3	8.5	9.7	12.1	14.6				
~~AH-32701 (LNS-W07)~~	NONE	N/A	N/A	N/A	N/A	N/A	N/A	N/A	N/A	N/A	N/A	N/A	N/A	N/A	N/A	N/A	N/A	N/A	N/A
AH-21102 (LNS-S02Z)	TELE	2.0	3.1	4.2	5.3	6.4	8.0	9.6	10.7	13.5	16.2	18.9	21.7	27.1	32.6	0	10	2	3
	WIDE	1.5	2.3	3.2	4.0	4.8	6.1	7.4	8.2	10.3	12.4	14.5	16.6	20.8	25.0				
AH-22051 (LNS-S03)	TELE	N/A	N/A	N/A	7.1	8.6	10.7	12.9	14.4	18.0	21.6	25.3	28.9	36.2	43.4	1	8	2	3
	WIDE	N/A	N/A	N/A	5.2	6.3	8.0	9.5	10.6	13.3	16.0	18.7	21.4	26.8	32.2				
AH-21055 (LNS-M01Z)	TELE	3.7	5.5	7.3	9.1	10.9	13.4	16.3	18.1	22.6	27.1	31.5	36.0	45.0	54.0	1	8	2	3
	WIDE	2.9	4.3	5.6	7.0	8.4	10.5	12.6	14.0	17.5	20.9	24.4	27.9	34.8	41.8				
AH-21091 (LNS-T02)	TELE	5.1	7.6	10.1	12.5	15.0	18.7	22.4	24.9	31.0	37.2	43.4	49.5	61.9	74.2	1	8	2	3
	WIDE	3.7	5.5	7.3	9.0	10.8	13.4	16.1	17.8	22.2	26.6	31.0	35.4	44.2	53.0				
AH-32581 (LNS-T03)	TELE	7.6	11.1	14.8	18.4	22.0	27.5	32.9	36.5	45.5	54.6	63.6	72.6	90.7	108.8	1	8	2	3
	WIDE	5.3	7.7	10.2	12.6	15.1	18.8	22.5	24.9	31.1	37.2	43.4	49.5	61.8	74.1				

LENS SHIFT (UP/DOWN)

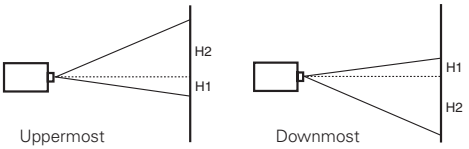

LENS SHIFT (SIDE TO SIDE)

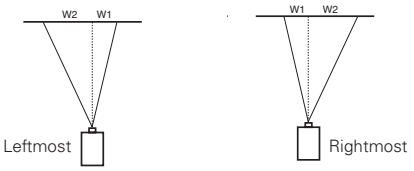

- 7 -

SPECIFICATIONS (Throw distance and screen size, lens shift ratio) for LC-W5

NOTE: Following table shows approximate measurement. Actual measurement depends on lens and projectors.

Part No.	Zoom	SCREEN SIZE (INCH) AND THROW DISTANCE (m)														LENS SHIFT/CENTER RATIO			
		30	60	80	100	120	150	180	200	250	300	350	400	500	600	U/D (MAX)		SIDE(MAX)	
																H1	H2	W1	W2
AH-21012 (LNS-W01Z)	NONE	1.0	2.1	2.9	3.6	4.4	5.5	6.6	7.3	9.2	11.0	12.8	14.7	N/A	N/A	-2	7	3	5
AH-21202 (LNS-W02Z)	TELE	1.6	3.3	4.4	5.5	6.6	8.3	10.0	11.1	13.9	16.7	19.5	22.4	N/A	N/A	-2	7	3	5
	WIDE	1.2	2.5	3.4	4.2	5.1	6.4	7.7	8.5	10.7	12.8	15.0	17.2	N/A	N/A				
AH-32021 (LNS-W03)	NONE	N/A	N/A	1.9	2.4	2.9	3.7	4.4	4.9	6.1	7.4	8.6	9.8	N/A	N/A	1	1	1	1
AH-32401 (LNS-W04)	TELE	1.8	3.6	4.9	6.1	7.4	9.2	11.1	12.4	15.5	18.6	21.7	24.9	N/A	N/A	-2	7	3	5
	WIDE	1.3	2.7	3.7	4.6	5.6	7.0	8.5	9.4	11.8	14.2	16.6	19.0	N/A	N/A				
AH-32501 (LNS-W05)	TELE	1.1	2.4	3.2	4.0	4.8	6.0	7.3	8.1	10.1	12.1	14.2	16.2	N/A	N/A	0	10	3	5
	WIDE	0.8	1.7	2.2	2.8	3.4	4.3	5.2	5.7	7.2	8.7	10.1	11.6	N/A	N/A				
AH-32601 (LNS-W06)	TELE	1.3	2.7	3.7	4.6	5.6	7.0	8.4	9.3	11.7	14.1	16.4	18.8	N/A	N/A	-2	7	3	5
	WIDE	1.0	2.1	2.8	3.6	4.3	5.4	6.5	7.2	9.0	10.8	12.6	14.4	N/A	N/A				
AH-32701 (LNS-W07)	NONE	0.5	1.0	1.3	1.7	2.0	2.5	3.0	3.4	4.2	5.1	6.0	6.8	N/A	N/A	1	1	1	1
AH-21102 (LNS-S02Z)	TELE	2.2	4.7	6.3	7.9	9.6	12.0	14.5	16.1	20.2	24.2	28.3	32.4	N/A	N/A	-2	7	3	5
	WIDE	1.7	3.6	4.8	6.1	7.3	9.2	11.1	12.3	15.5	18.6	21.7	24.9	N/A	N/A				
AH-22051 (LNS-S03)	TELE	3.1	6.3	8.5	10.6	12.8	16.0	19.3	21.4	26.8	32.2	37.6	43.0	N/A	N/A	-2	7	3	5
	WIDE	2.2	4.6	6.2	7.8	9.4	11.9	14.3	15.9	19.9	23.9	27.9	31.9	N/A	N/A				
AH-21055 (LNS-M01Z)	TELE	4.1	8.1	10.8	13.5	16.1	20.1	24.1	26.8	33.5	40.2	46.9	53.5	N/A	N/A	-2	7	3	5
	WIDE	3.2	6.3	8.4	10.4	12.5	15.6	18.7	20.7	25.9	31.1	36.2	41.4	N/A	N/A				
AH-21091 (LNS-T02)	TELE	5.7	11.2	14.9	18.5	22.2	27.7	33.2	36.9	46.0	55.2	64.4	73.6	N/A	N/A	-2	7	3	5
	WIDE	4.2	8.1	10.7	13.3	15.9	19.9	23.8	26.4	32.9	39.5	46.0	52.6	N/A	N/A				
AH-32581 (LNS-T03)	TELE	8.4	16.5	21.9	27.2	32.6	40.7	48.8	54.1	67.6	81.0	94.5	107.9	N/A	N/A	-2	7	3	5
	WIDE	5.8	11.3	15.0	18.7	22.3	27.8	33.3	37.0	46.1	55.3	64.4	73.6	N/A	1N/A				

LENS SHIFT (UP/DOWN)

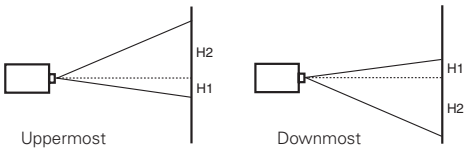

LENS SHIFT (SIDE TO SIDE)

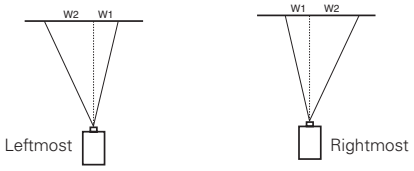

- 8 -

1AA6P1P5572B- (KS3B-B)

Mechanical Disassembly

Mechanical disassembly flow chart

Mechanical disassembly should be made by following procedures chart.
Following steps show the basic procedures, therefore unnecessary step may be ignored.
Caution:
The parts and screws should be placed exactly the same position as the original otherwise it may cause loss of performance and product safety.
The wiring method of the leads and ferrite cores should be returned exactly the same state as the original, otherwise it may cause lose of performance and product safety.

Screws Expression (Type Diameter x Length) mm	
T type	M Type
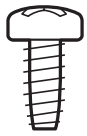	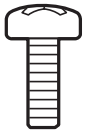

1 Cabinet front cover removal

2 Cabinet front removal → **2-1 LED and front R/C board removal**

3 Cabinet top removal → **3-1 Lamp cover removal**
→ **3-2 Filter cover removal**

4 Main board removal

5 Filter holder ass'y removal → **5-1 Filter holder disassembly**
→ **5-2 Filter motor ass'y disassembly**

6 Shutter ass'y, motor drive, lens-net and rear RC bards removal

7 Sensor, RGB fan-net, lamp fan-net board removal

8 Side panel ass'y removal → **8-1 Side panel ass'y disassembly-1**
→ **8-2 Side panel ass'y disassembly-2**
→ **8-3 AV/DVI ass'y disassembly**

9 Power box ass'y removal → **9-1 Power box ass'y removal-1**
→ **9-2 Power box ass'y disassembly-1**
→ **9-3 Power box ass'y disassembly-2**

10 Lens shift ass'y removal → **10-1 Lens shift ass'y disassembly**

11 Optical unit removal

12 Optical lamp unit removal → **12-1 Fans removal**

13 Lens cover holder and noise filter unit ass'y removal
→ **13-1 Noise filter unit ass'y disassembly**
→ **13-2 Wiring of the noise filter ass'y**

14 Duct cover ass'y removal → **14-1 Duct cover ass'y disassembly**

Mechanical disassembly

1 Cabinet front cover removal

1 Turn the Cabinet Front Ring anti-clockwise and pull it forward to remove.
2 Remove 2 screws-A (M4x10) and loosen 2 screws-B, and pull the cabinet front cover-A forward.
3 Remove the projection Lens Assy. See item "Lens Mounting" for further information.

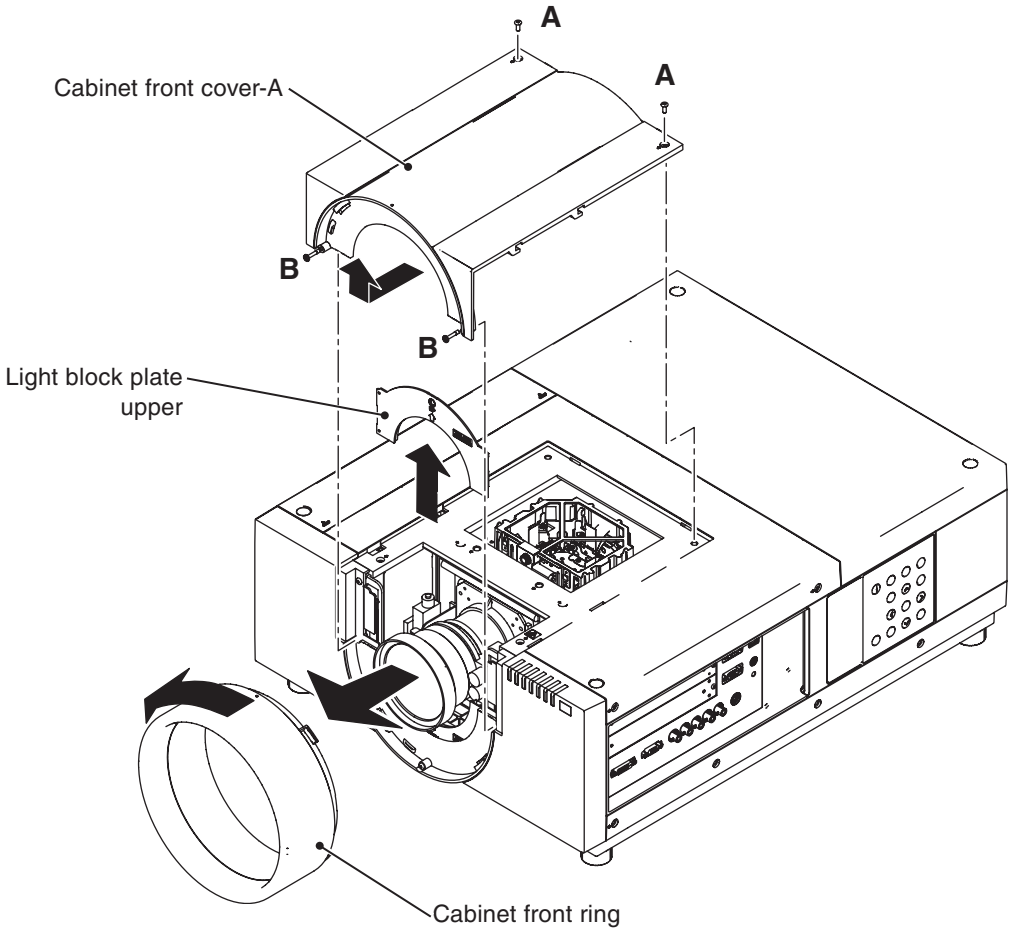

2 Cabinet front removal

1 Remove 4 screws-A (M4x10), 2 screws-B (M4x10) and 1 screw-C (M4x30).
2 Disconnect the cable on the LED board and remove the cabinet front.

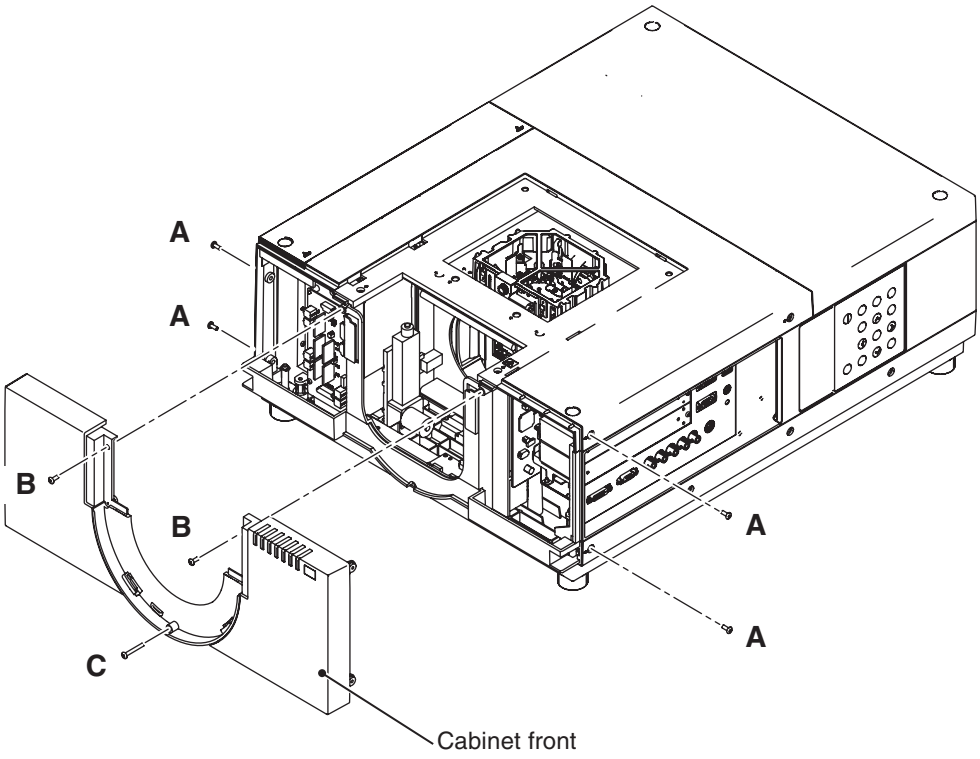

2-1 LED and front RC boards removal

1 Remove 2 screws-A (T3x6) on the LED board and 2 screws-B (T3x6) on the front RC board and then remove boards.

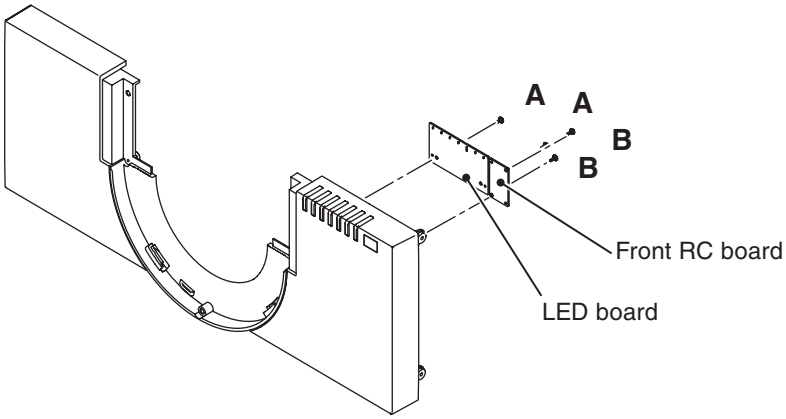

3 Cabinet top removal

1 Remove 2 screws A (M4x10) 4 screws-B (M4x10) and then remove the cabinet top ass'y upward.

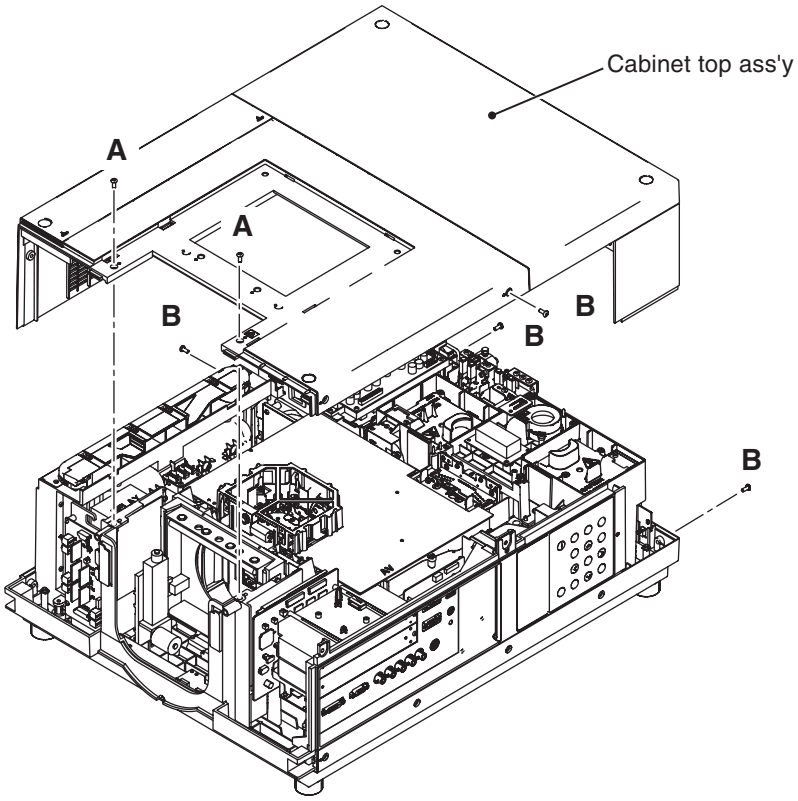

3-1 Lamp cover removal

1 Loosen 1-screw-A on the lamp cover and pull the cover backward.
2 Remove each 2 screws-B (T4x10) on the hinges and then remove the lamp cover.

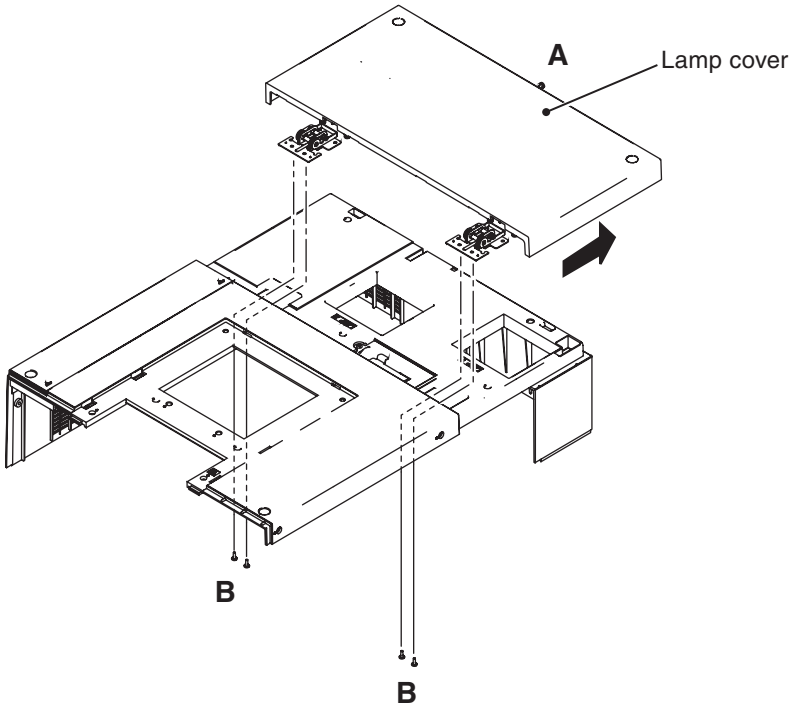

3-2 Filter cover removal

1 Slide the filter cover and remove it as shown in the figure.

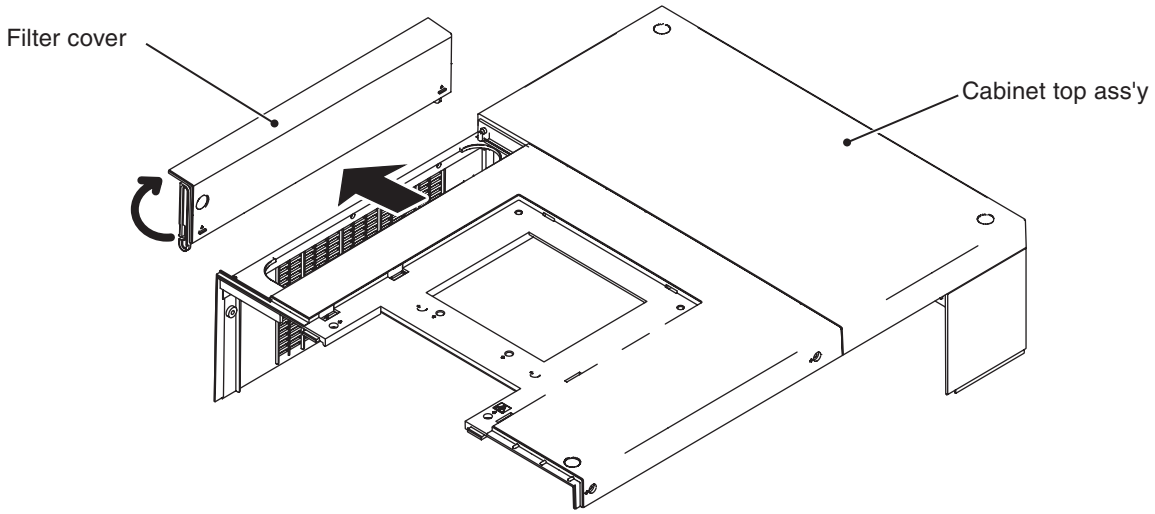

4 Main board removal

1 Remove the prism dust cover upward off.
2 Remove 5 screws-A (M3x6) and remove the main board.

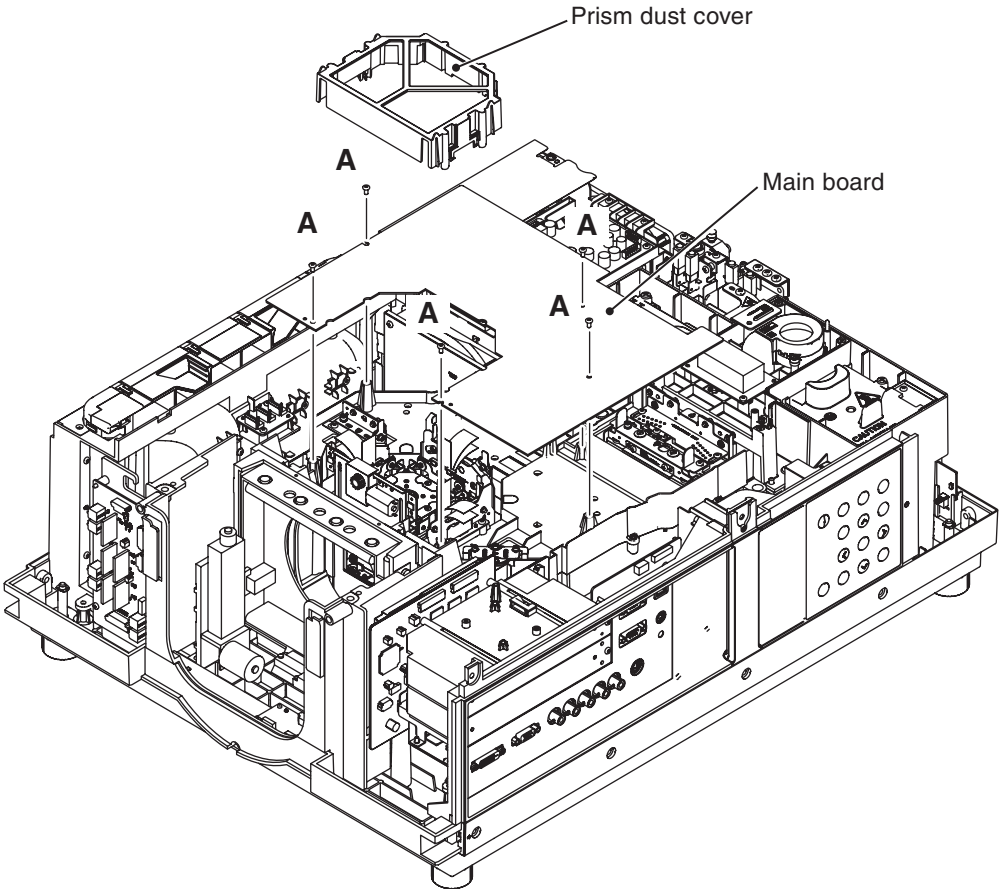

5 Filter holder ass'y removal

1 Pull the filter cartridge upward off.
2 Remove 4 screws-A (T4x10) and 1 screw-B(M4x10), and then remove the filter holder ass'y upward off.

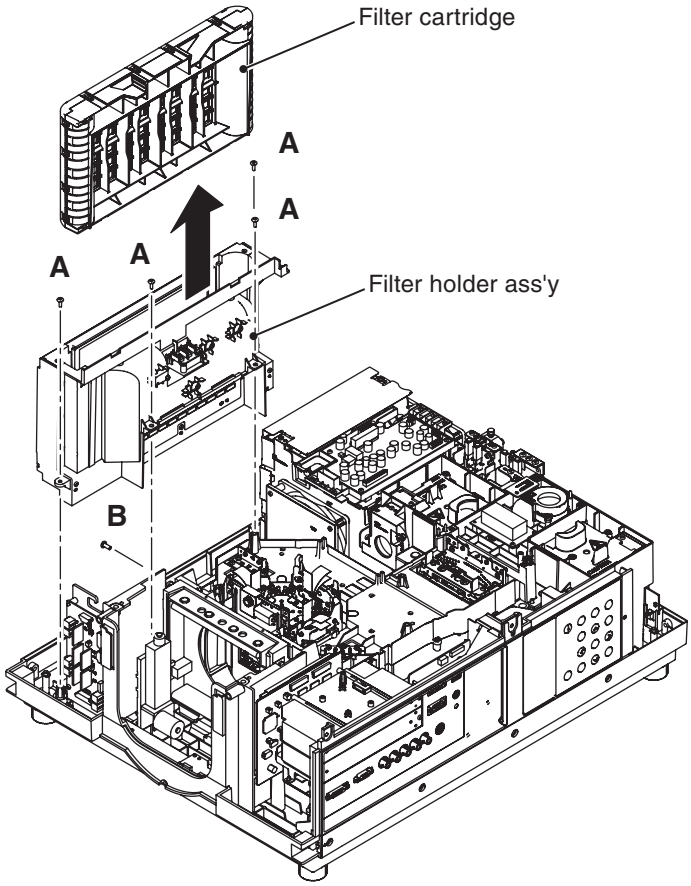

5-1 Filter holder disassembly

1 Remove 1 screw-A (T3x14) and remove the wind sensor (S901).
2 Remove 2 screws-B (T3x8) and remove the filter switch board.
3 Remove 3 screws-C (T3x8) and remove the filter motor ass'y.

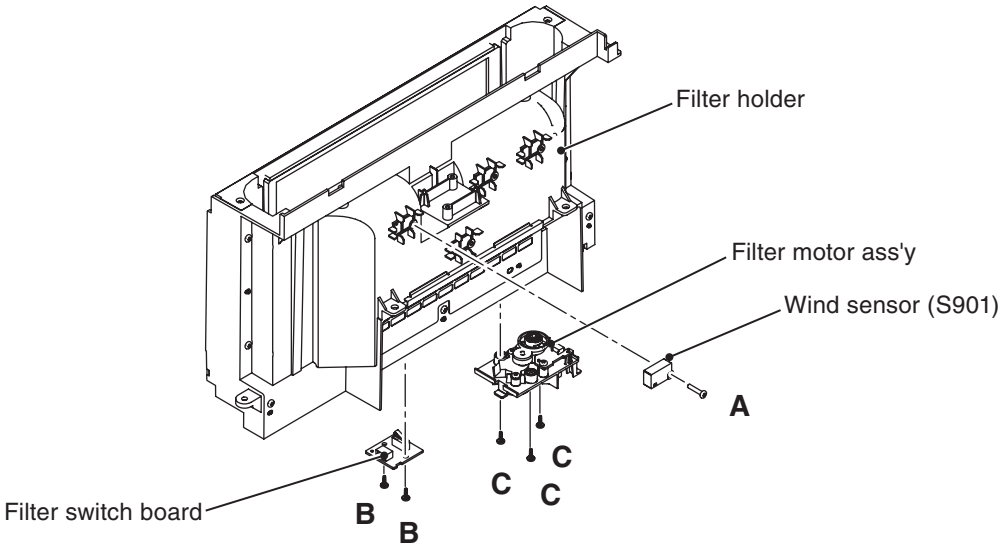

5-2 Filter motor ass'y disassembly

1 Pull the filter gear upward off.
2 Remove 2 screws-A (T3x8) and remove the filter motor.
3 Remove 1 screw-B (T3x8) and remove the hall sensor board.

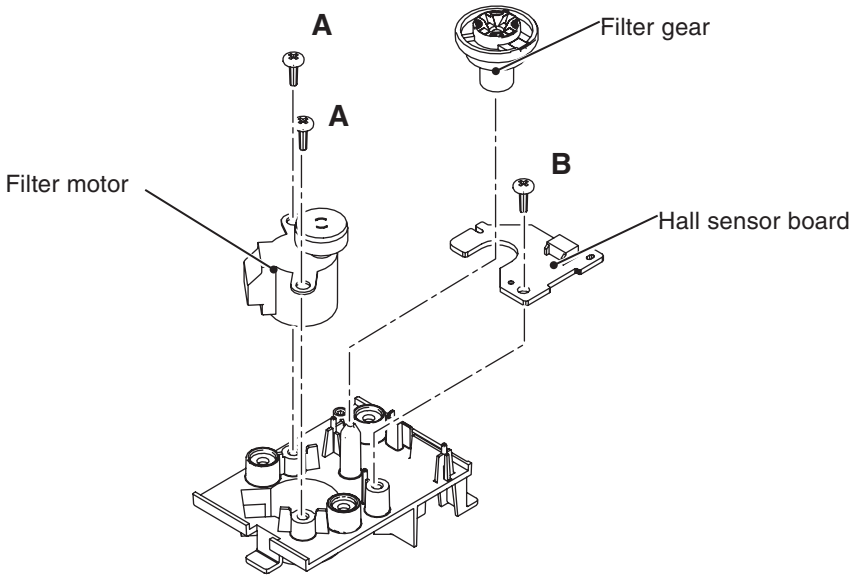

6 Shutter ass'y, motor, lens-net and rear RC boards removal

1 Remove 2 screws-A (T3x12) and remove the shutter ass'y upward off.
2 Remove 2 screws-B (T3x8) and remove the motor board.
3 Remove 2 screws-C (T3x8) and remove the lens-net board.
4 Remove the RC rear board upward off.

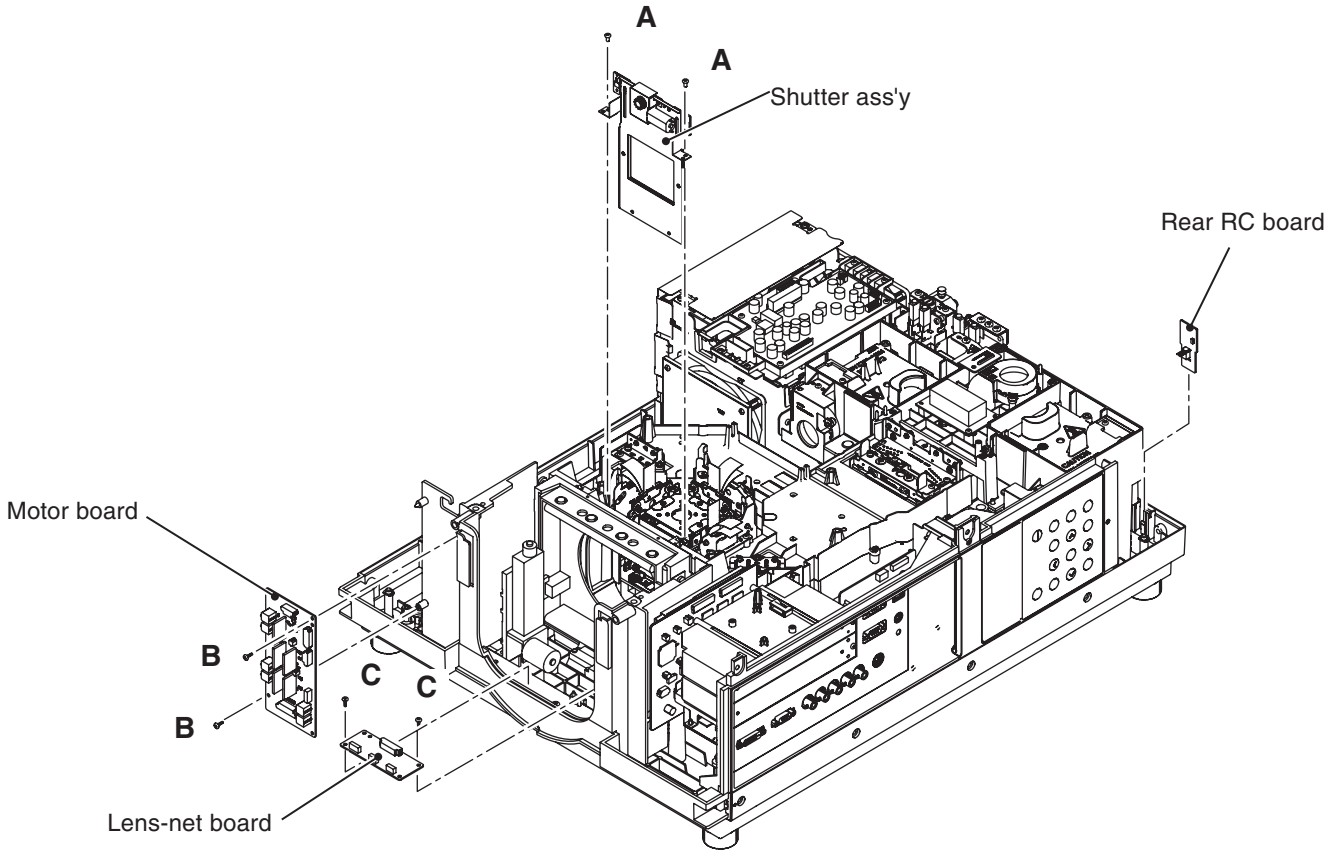

7 Sensor, RGB fan-net, Lamp fan-net boards removal

1 Remove 1 screw-A (T3x8) and remove the sensor board.
2 Remove 2 screws-B (T3x8) and remove the RGB fan-net board.
3 Remove 2 screws-C (T3x8) and remove the lamp fan-net board.

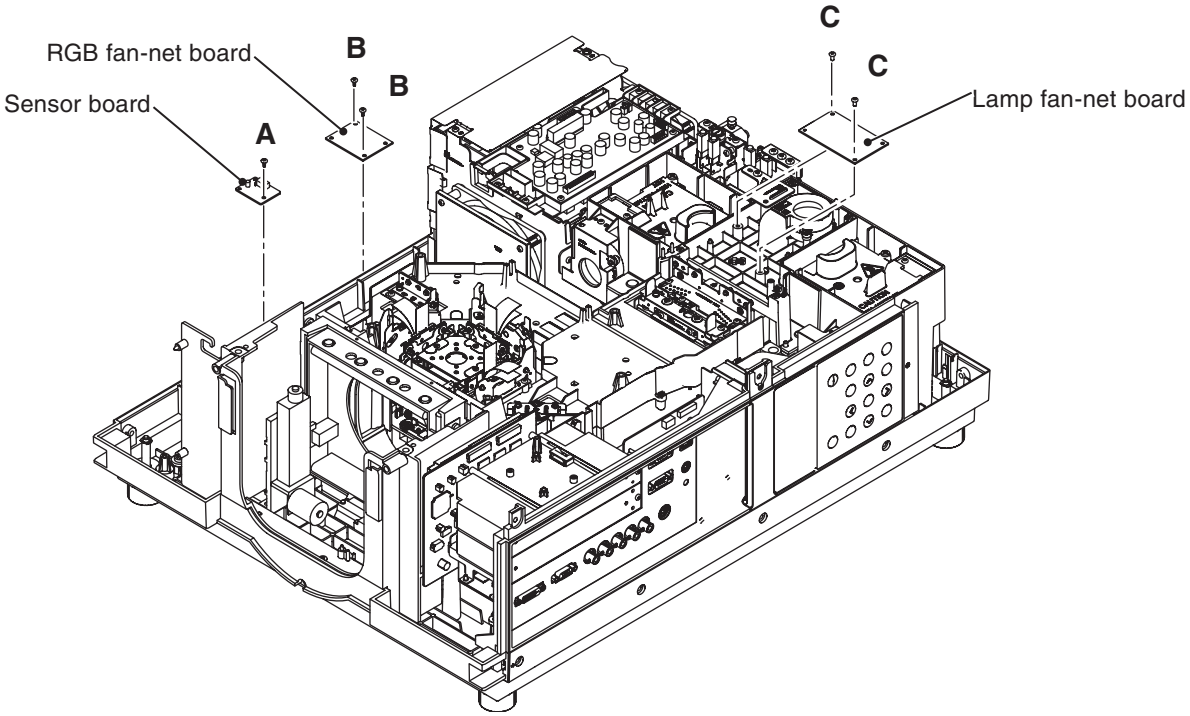

8 Side panel ass'y removal

1 Remove 3 screws-A (M4x10) and 3 screws-B (T4x10) and remove the side panel ass'y upward off.

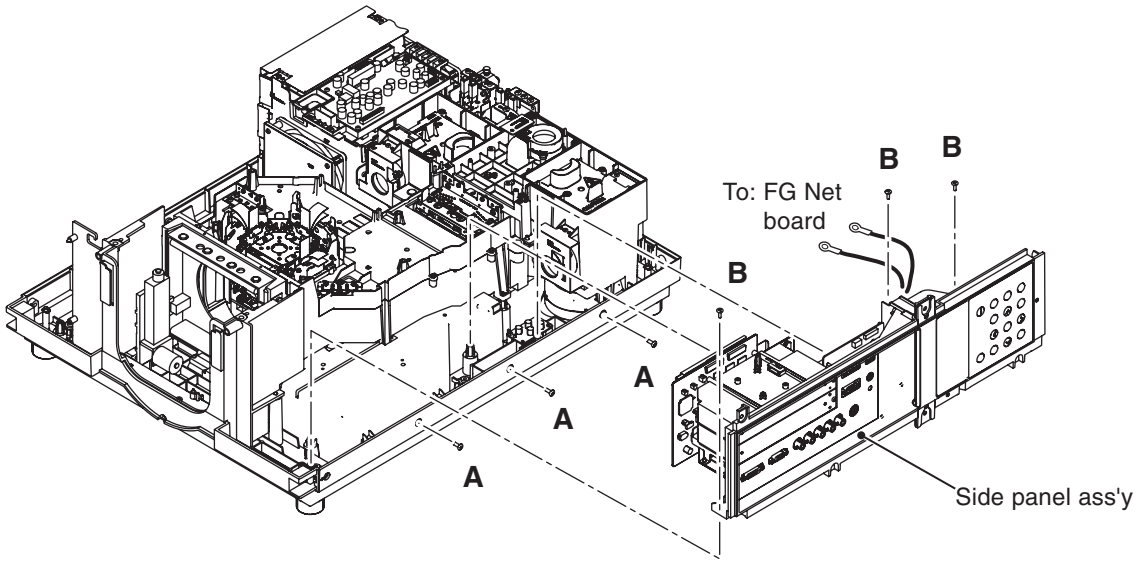

8-1 Side panel ass'y disassembly-1

1 Remove 3 screws-A(T3x8) and remove the control board and button.
2 Remove 2 screws-B(M3x8) and remove handle.
3 Remove 4 screws-C(T3x8) and remove shield plate and gasket. Pull out the CG mother board.

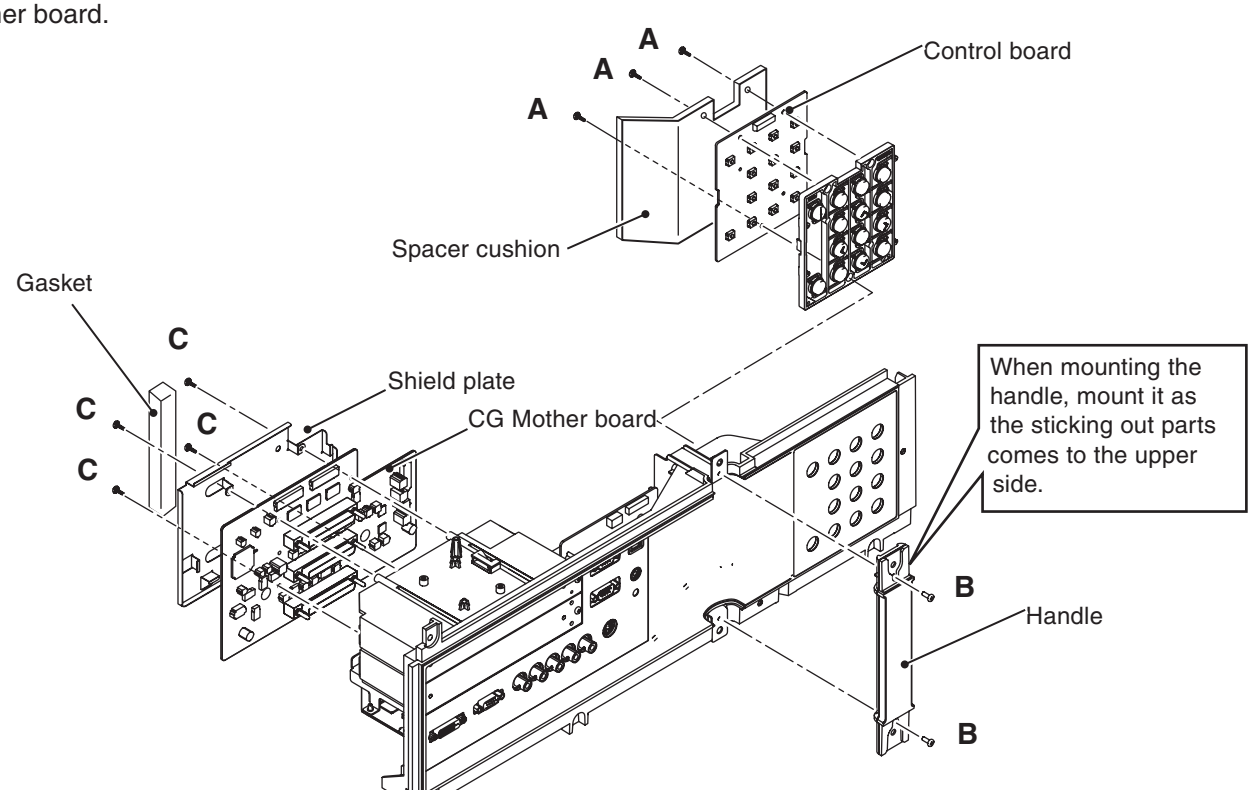

8-2 Side panel ass'y disassembly-2

1 Remove 2 screws-A(T3x8) and remove the AV/DVI board ass'y.
2 Remove 5 screws-B(T3x8) and remove RS-2332C board.

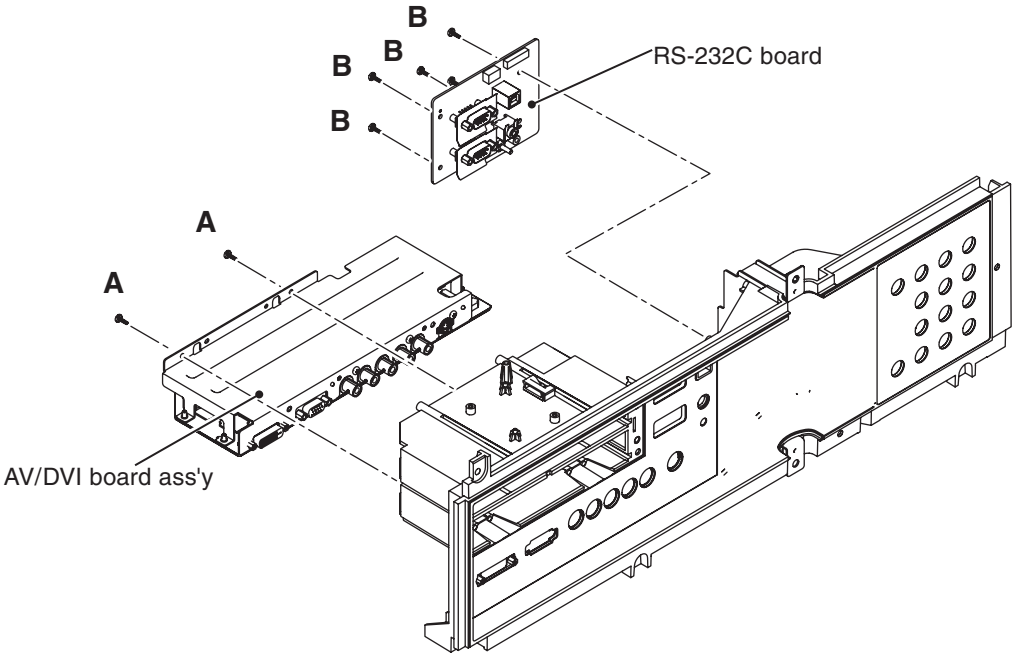

8-3 AV/DVI board ass'y disassembly

1 Remove 4 screws-A(M3x8), 3 screws-B(T3x8) and 2 hex screws-C and then remove the shield plate, holder and the AV/DVI board.

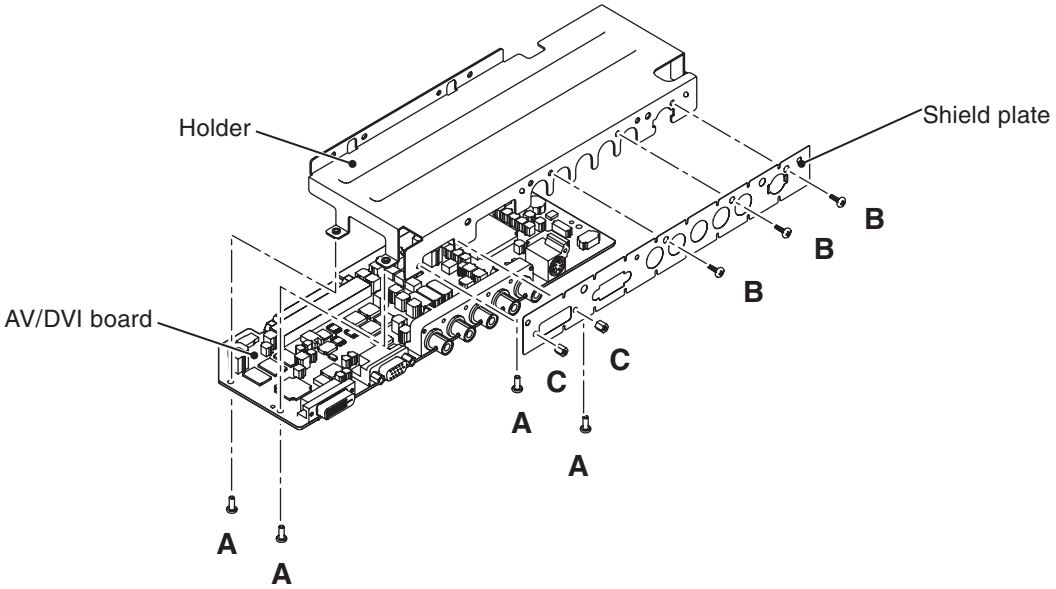

9 Power box ass'y removal

1 Loosen each 2 screws on the lamp house and remove lamp houses.
2 Remove 1 screws-A(M3x10) and remove lamp1 ballast trigger, and remove 1 screw-B(T3x8) and remove lamp2 ballast trigger.
3 Remove 2 screws-C(M3x6, M4x6) and remove the AC holder support and the grounding lead.
4 Remove each 2 screws-D(M3x8) and remove the lamp sockets.

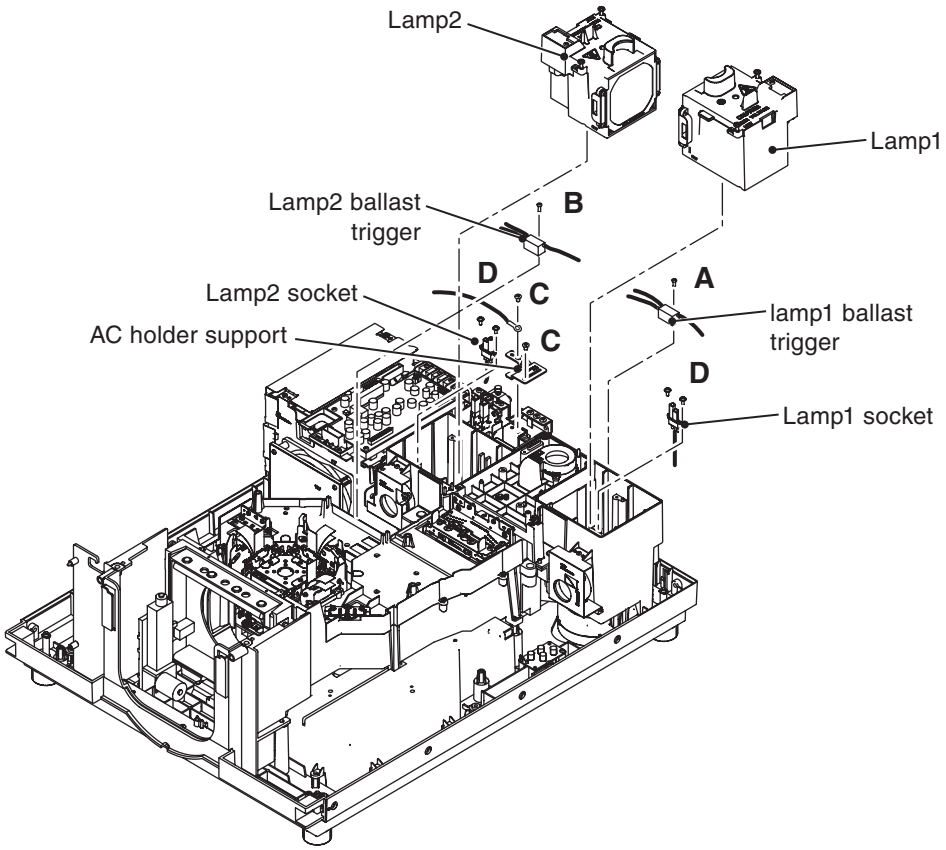

9-1 Power box ass'y removal-1

1 Remove 1 screw-A(M3x6) and 1 screw-B(M3x6) and remove power box cover.
2 Remove the sockets on the noise filter.
3 Remove 3 screws-C(T3x10) and pull the power box ass'y upward off.

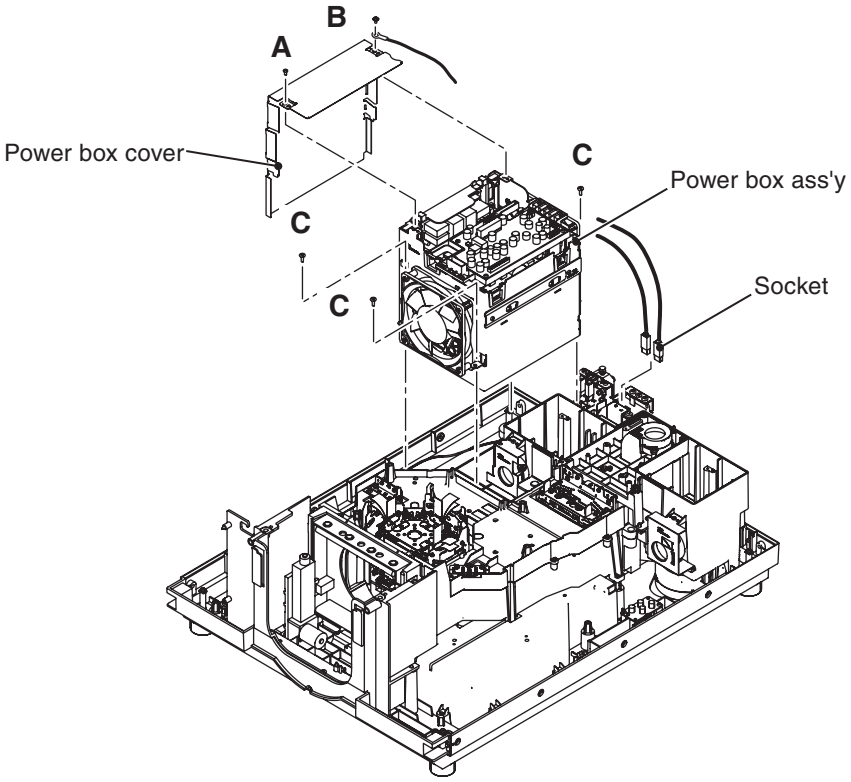

9-2 Power box ass'y disassembly

1 Remove 4 screws-A(T3x6) and remove the power(DC) board.
2 Remove 2 screws-B(T4x10) and pull the power(PFC) board ass'y upward off.
3 Remove 4 screws-C(T3x6) and remove the power(PFC) board.

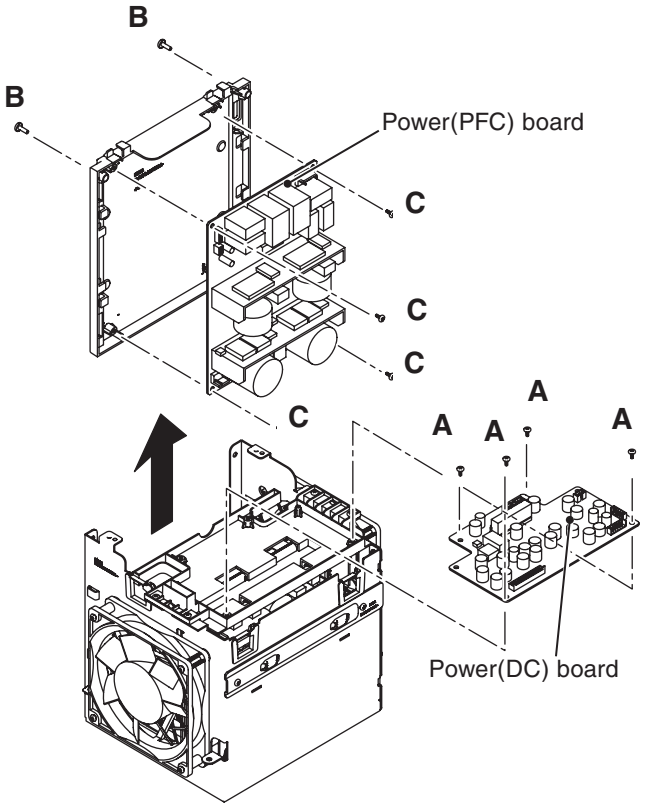

9-3 Power box ass'y disassembly-2

Board removal

1 Remove 4 screws-A(T3x8) and pull the power board ass'y upward off.
2 Remove 4 screws-B(T3x6) and remove the ballast-1. Remove 4 screws-C(T3x6) and remove the ballast-2.
3 Remove 4 screws-D(T3x6) and remove the power board.
4 Remove 2 screws-E(T3x6) and 1 screw-F(M3x6), and remove spacer and shield plate.

Fans Removal

1 Remove 4 screws-G(M3x30) and remove the fan (FN905).
2 Remove 4 screws-H(M3x30) and remove the fan (FN906).

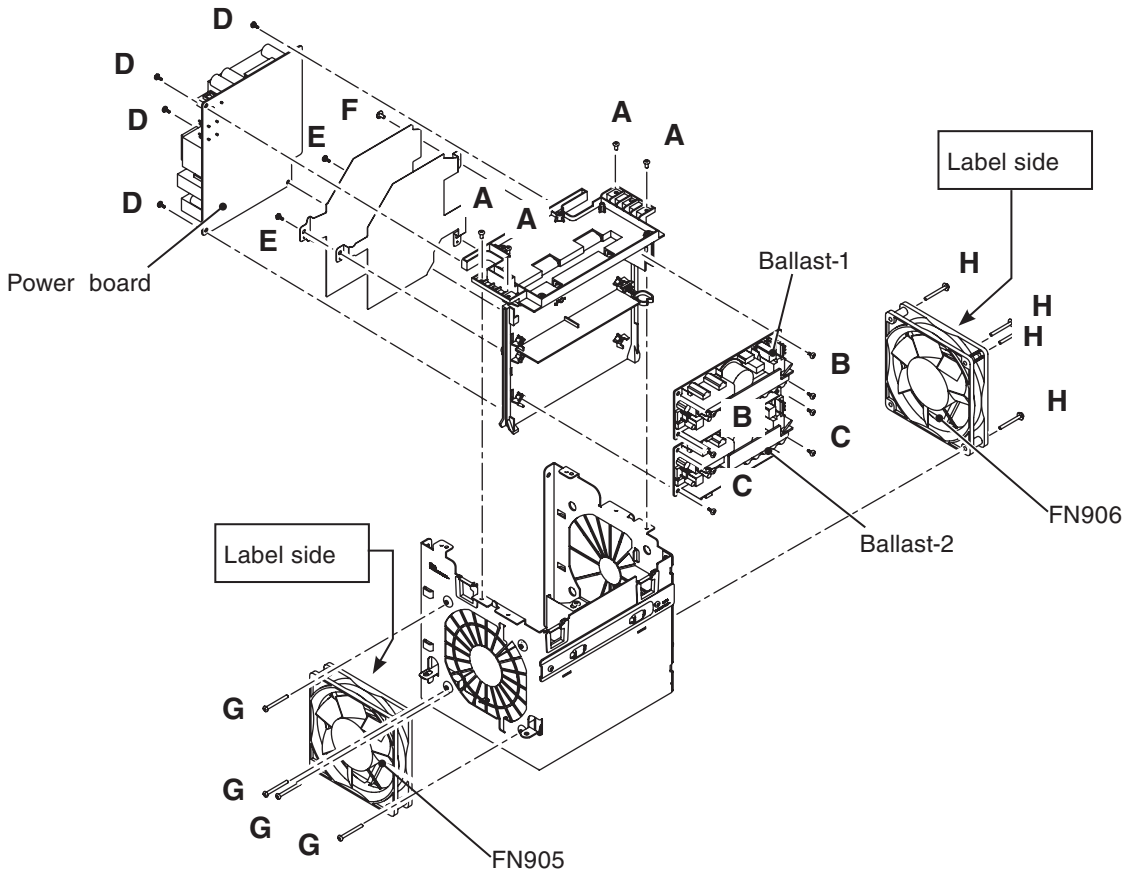

10 Lens shift ass'y removal

(Before disassembling, make sure the lens should be adjusted to the center position.)

1 Remove 4 screws-A(T4x14) and 4 screws-B(M4x12) and remove the lens shift ass'y upward off.

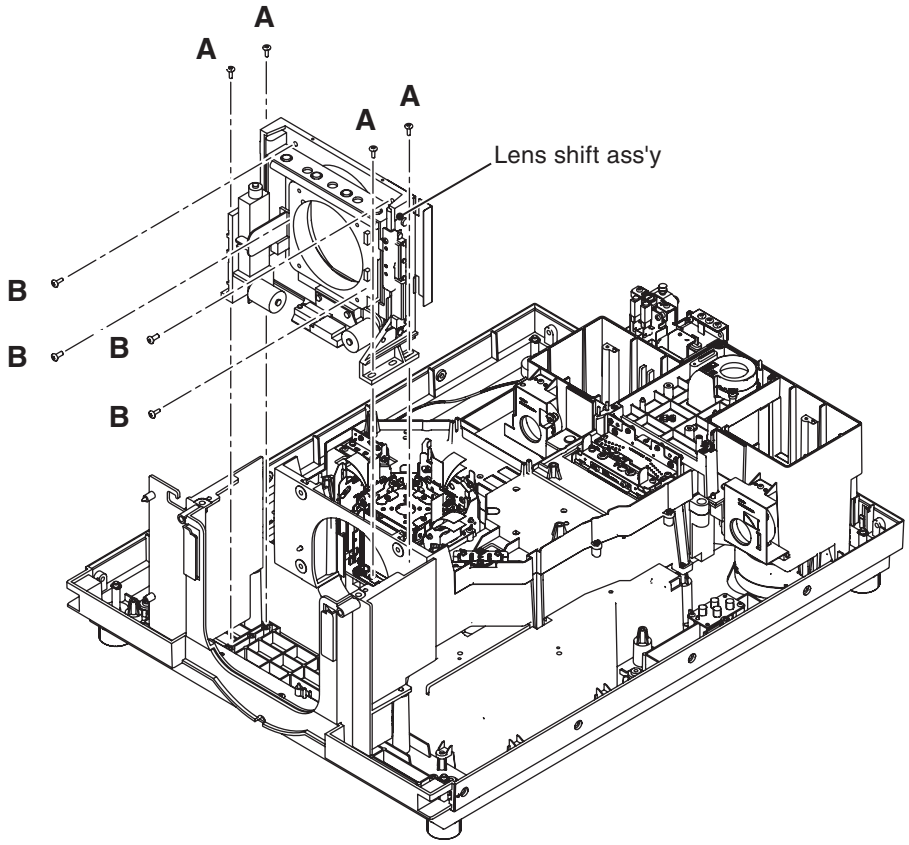

10-1 Lens shift ass'y disassembly

1 Remove the motors.
2 Remove the lens position detection switches.
3 Remove the Lens Base Net board.

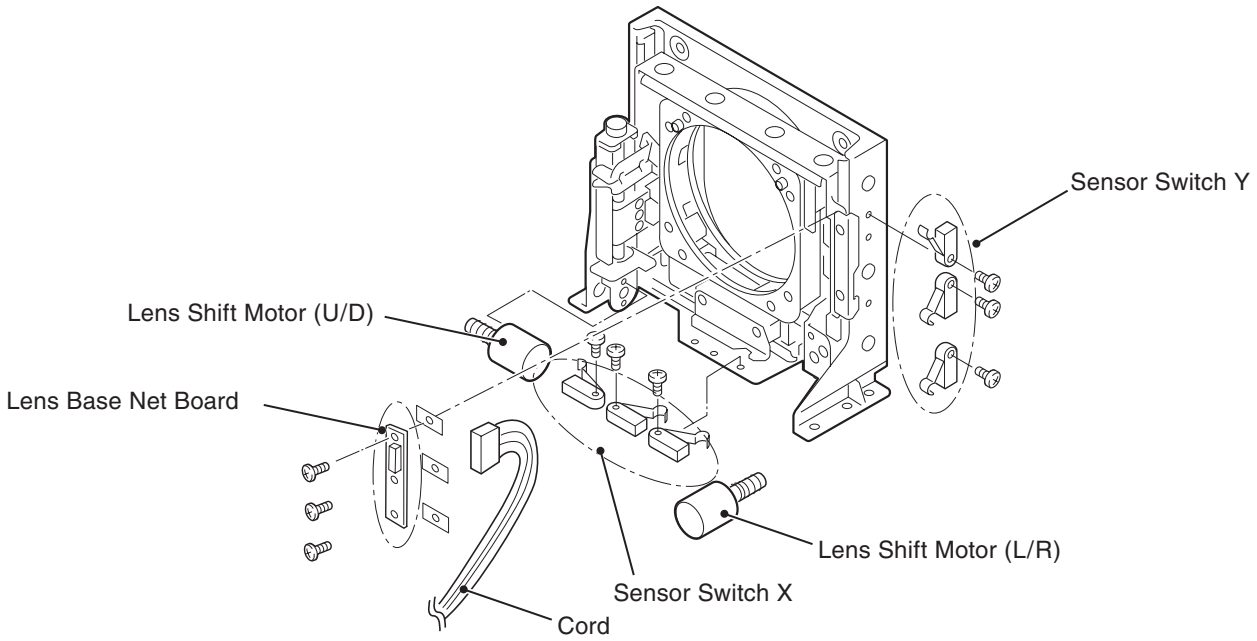

11 Optical unit removal

1 Remove 2 screws-A(M3x6) and remove the integrator-in ass'y upward off.
2 Remove 4 screws-B(M4x12) and 4 screws-C(T4x10) and remove the optical unit ass'y upward off.

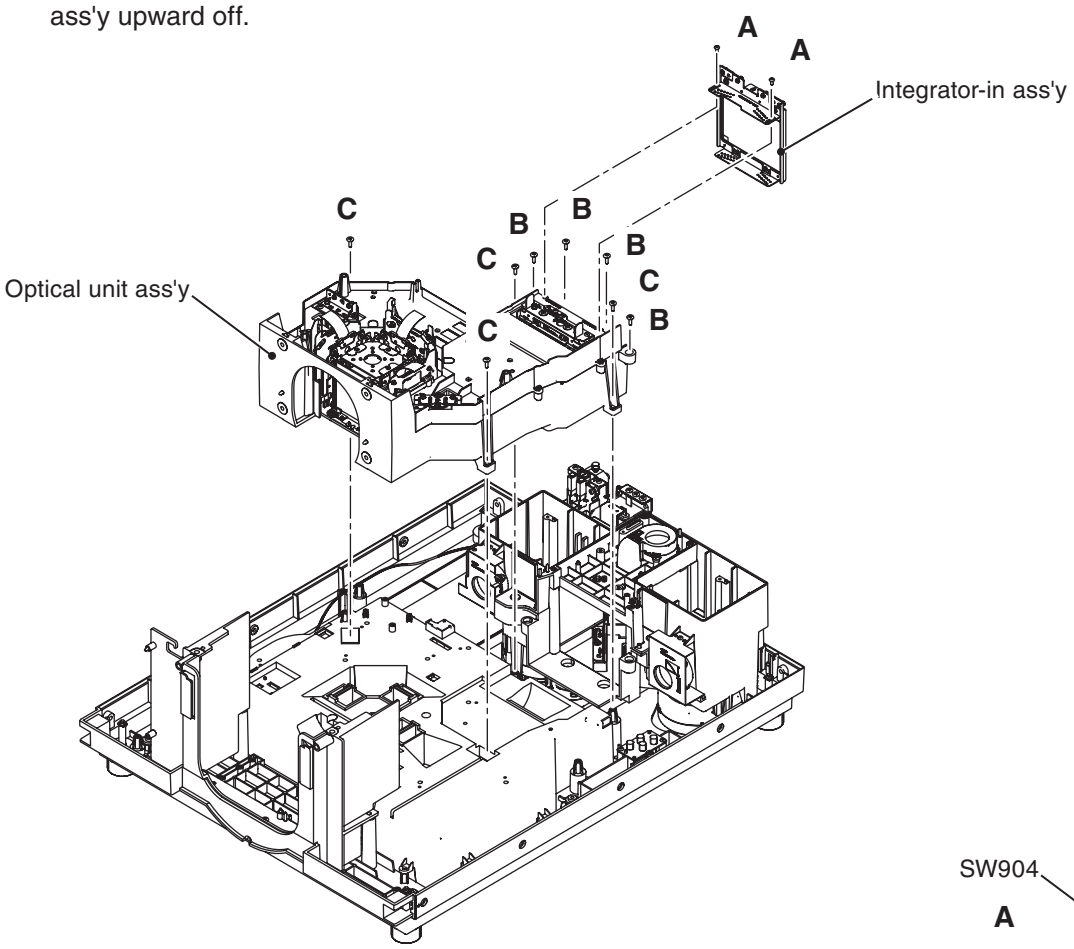

12 Optical lamp unit removal

1 Remove 3 screws-A(T4x10) and remove the optical lamp unit ass'y upward off.
2 Remove each 1 screw-B(M3x10) and remove the thermal switches (SW903 and SW904).

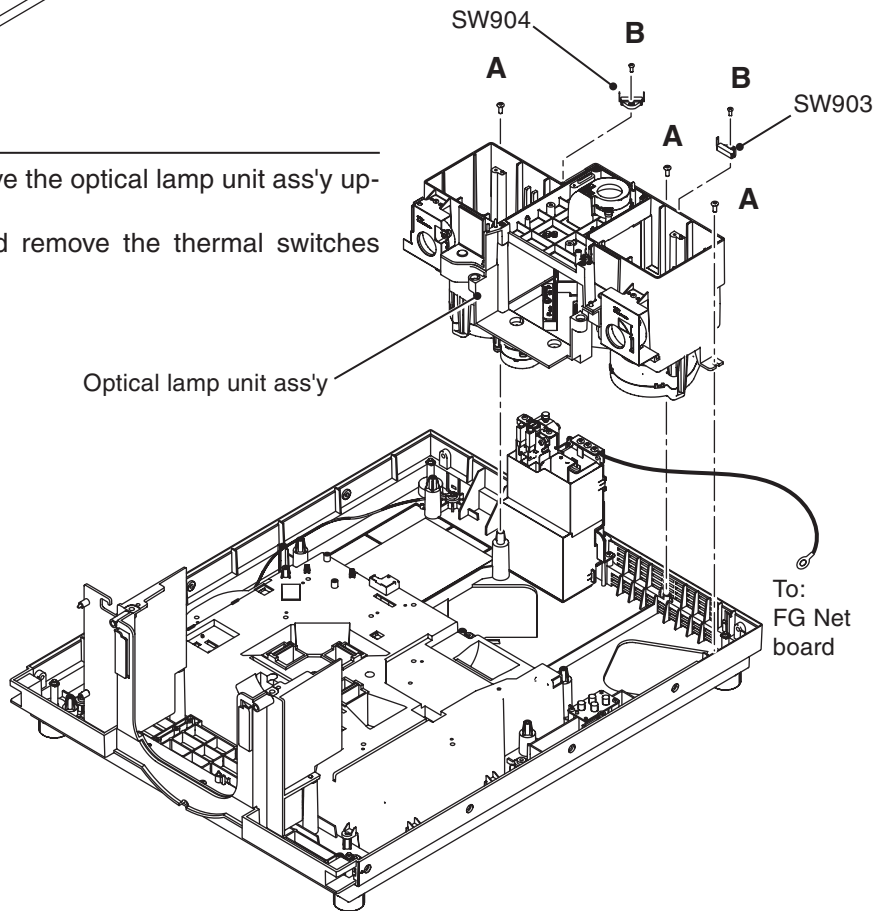

12-1 Fans removal

1 Remove fans on the bottom of the optical lamp unit.
FN908 with 2 screws-B(T3x40), FN909 with 2 screws-C(T3x40).
2 Remove fans on the top and side of the optical lamp unit.
Remove 1 screw-D(T3x6) and remove 2 screws-E(M3x10) and remove FN911.
Remove 1 screw-F(T3x6) and remove 2 screws-G(M3x10) and remove FN910.
Remove 2 screw-H(T3x12) and remove FN912.

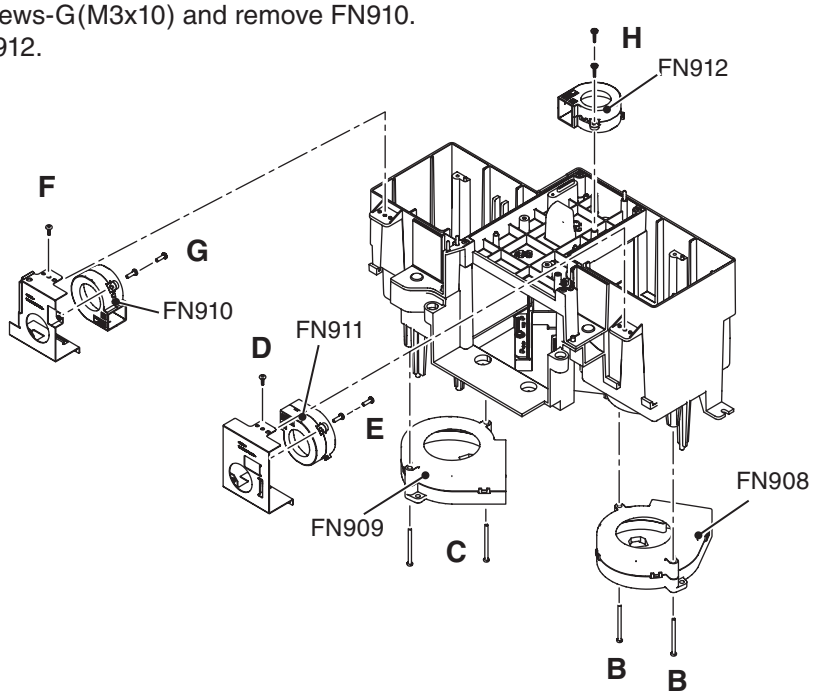

13 Lens cover holder and noise filter unit ass'y removal

1 Remove 3 screws-A(T4x10) and remove the lens cover holder upward off.
2 Remove 2 screws-B(T4x10) and remove the noise filter unit ass'y upward off.

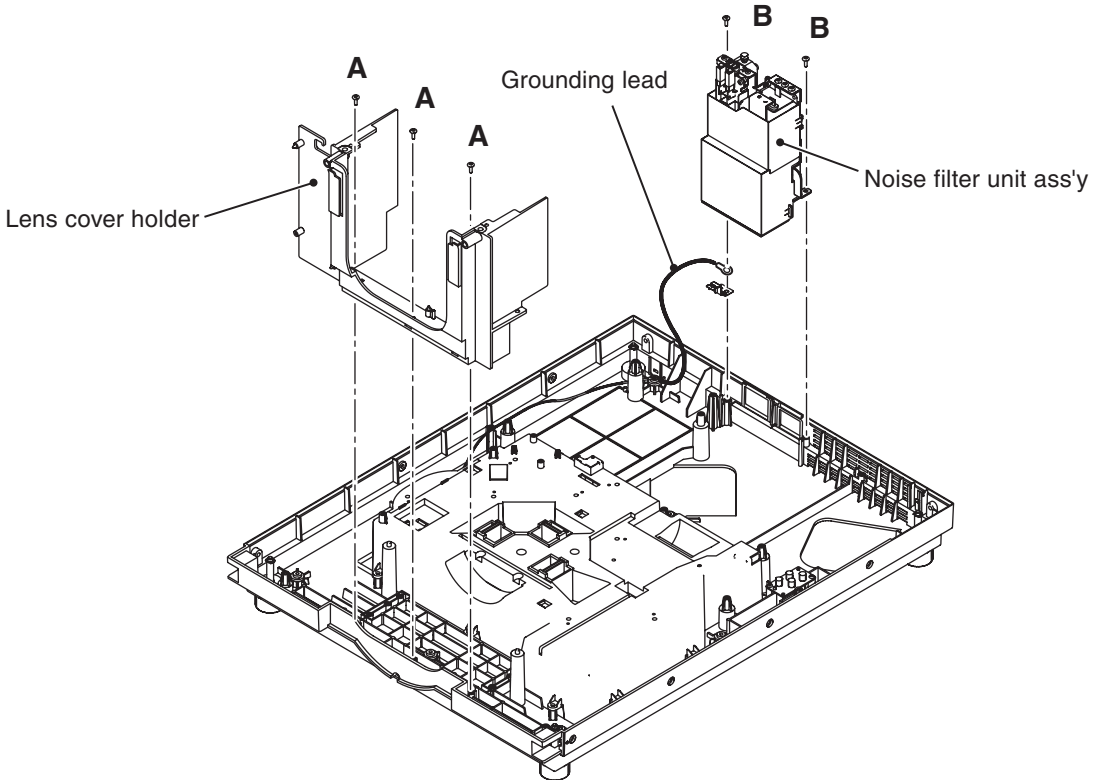

13-1 Noise filter unit ass'y disassembly

1 Remove the noise filter cover.
2 Remove the inlet holder, and remove 2 screws-A(M3x10) and remove the AC inlet.
3 Remove the AC switch (SW901) backward.
4 Remove 2 screws-B(M4x12) and remove the lamp cover switch (SW902).
5 Remove 2 screws-C(M4x6) and remove the noise filter.
6 Remove fuse holder.

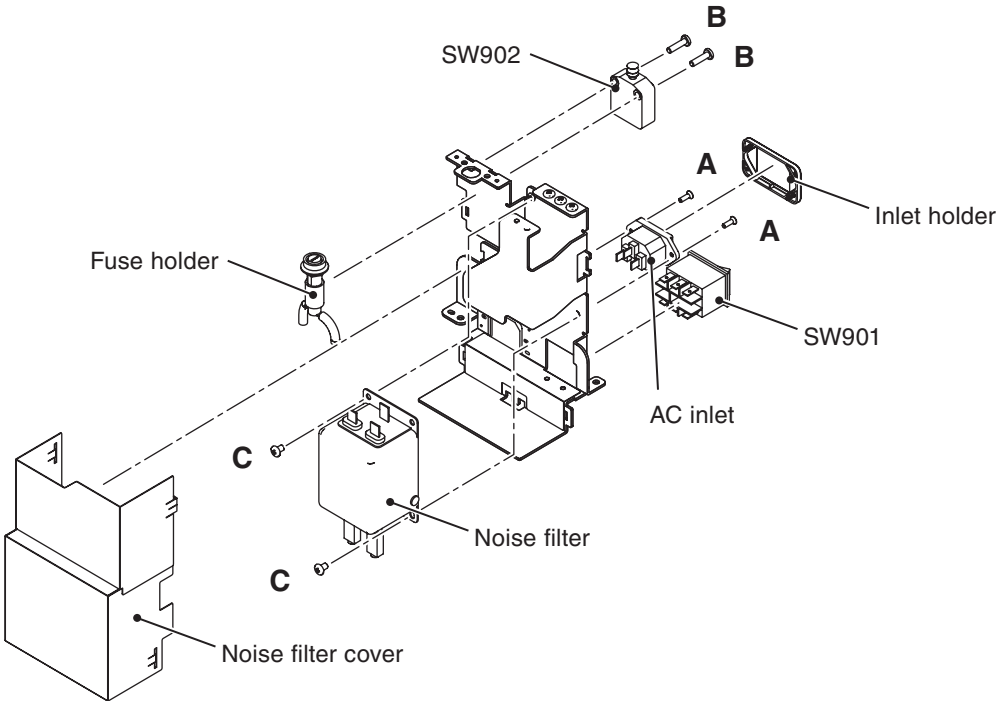

13-2 Wiring of the noise filter ass'y

See the following figures for wiring.

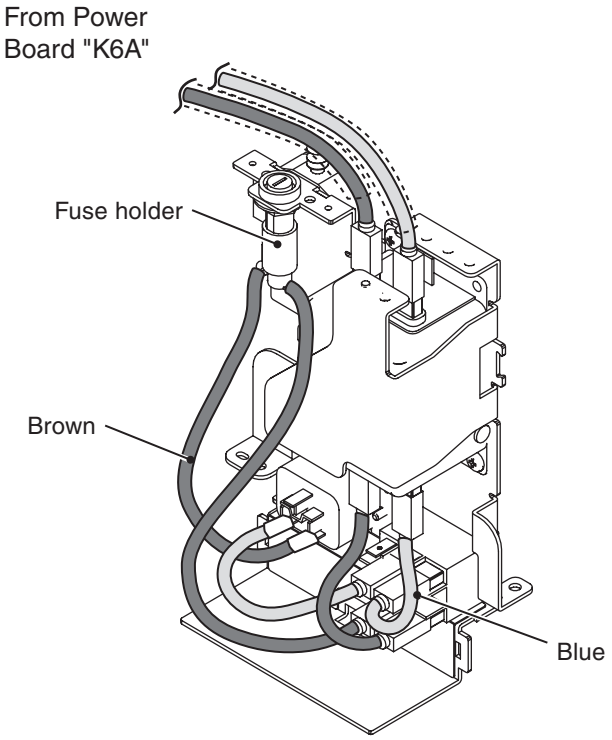

14 Duct cover ass'y removal

1 Remove 10 screws-A (T4x10) and remove the duct cover ass'y upward off.
2 Remove 2 screws-B(T4x10) and remove the F.G Net board.

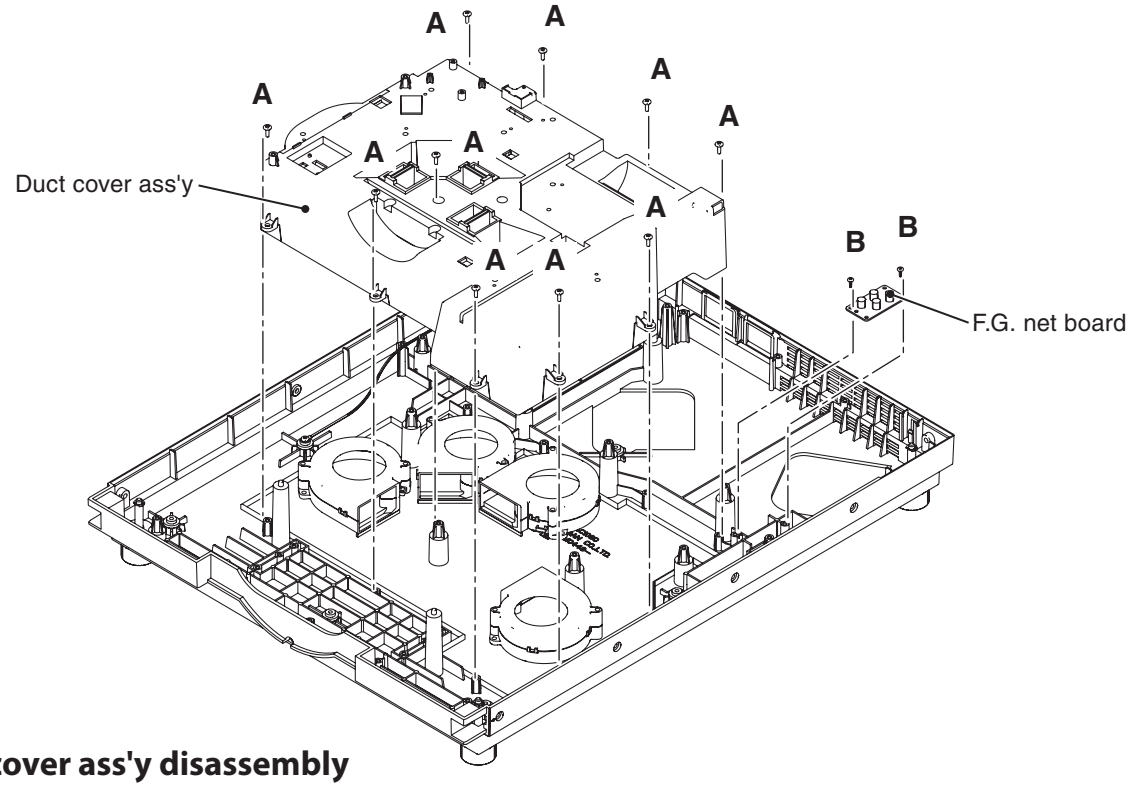

14-1 Duct cover ass'y disassembly

1 Remove fans behind the duct cover.
FN901 (K77P) with screws-A(T4x40)
FN904 (K77S) with screws-B(T4x40)
FN902 (K77Q) with screws-C(T4x40)
FN903 (K77R) with screw-D(T4x40)
FN907 (K77E) with screws-E(T4x40)

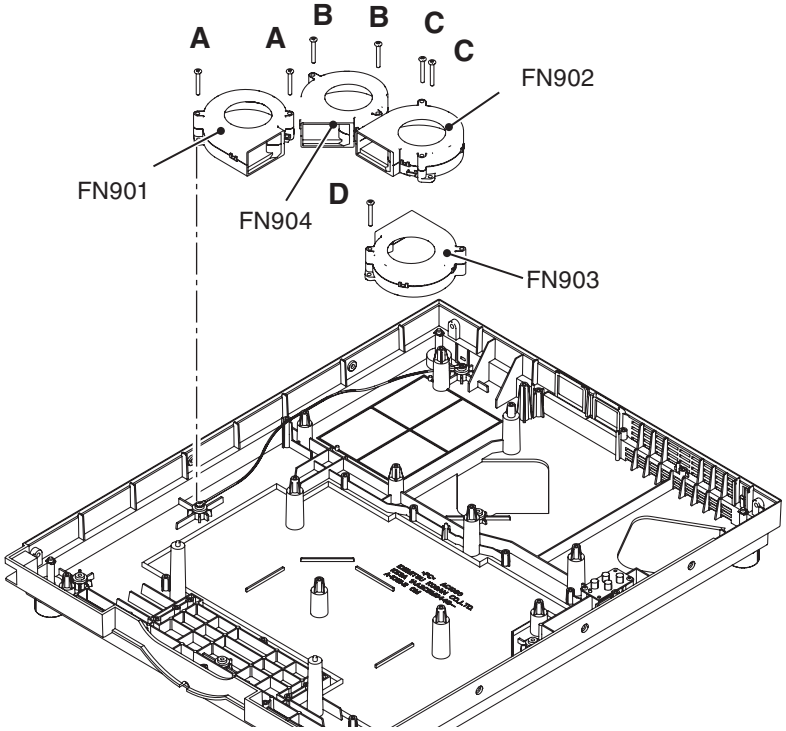

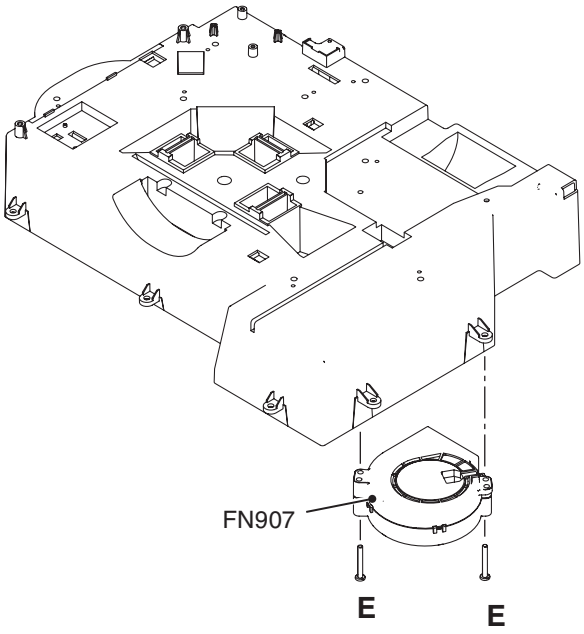

Optical Parts Disassembly

Disassembly requires a 2.0mm or 2.5mm hex wrench and a screwdriver.

1 LCD panel/prism ass'y removal

Remove the duct cover, and remove 4 screws-A(M2.5x8) and remove the LCD panel/prism ass'y upward off.

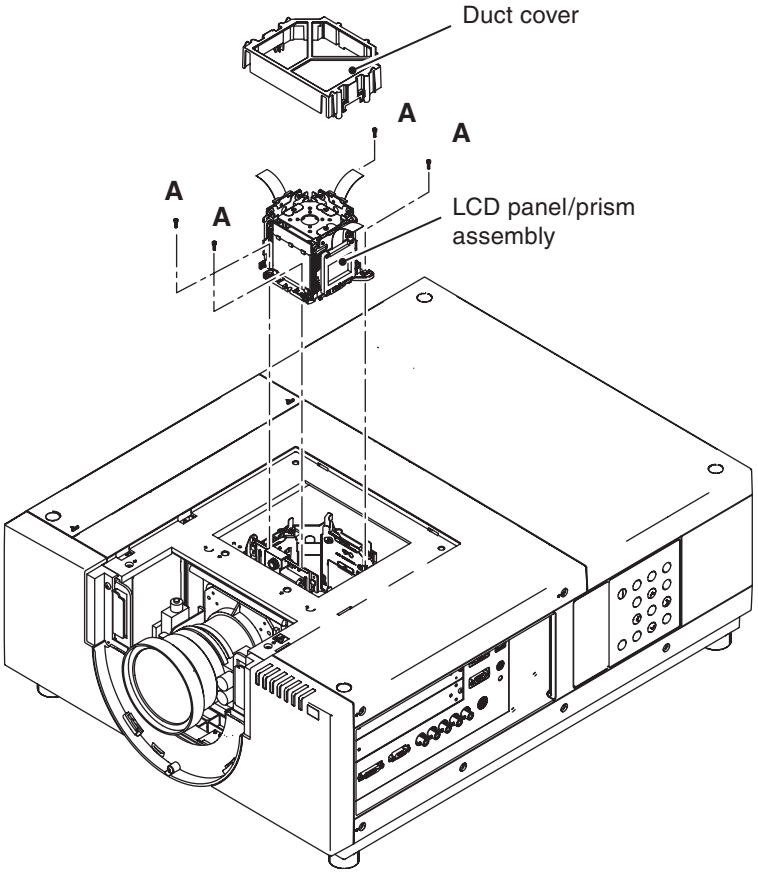

LCD panel/prism top view

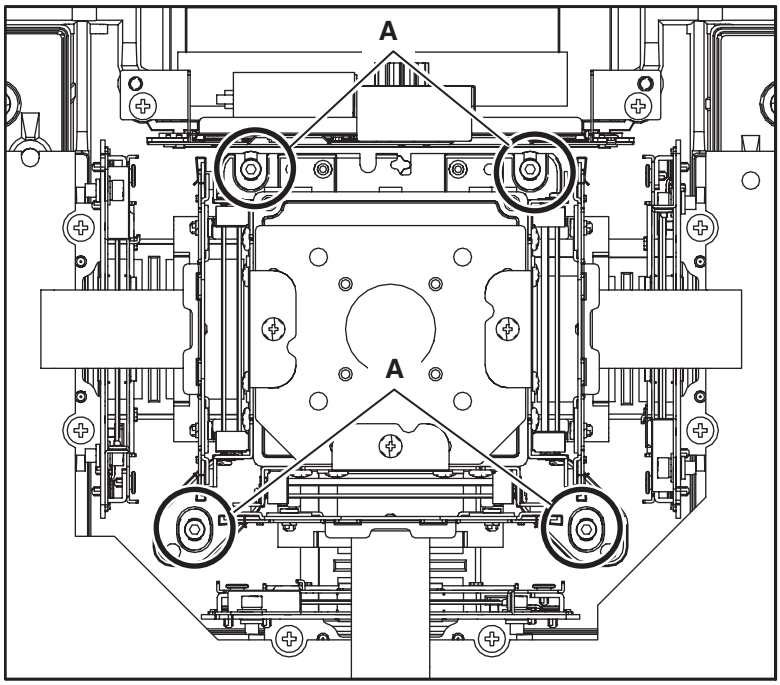

1-1 Polarized glasses-out/pre-polarized glasses removal

Remove 1 screw-B (M2.5x4) on each stopper and take the polarized glasses upward off.

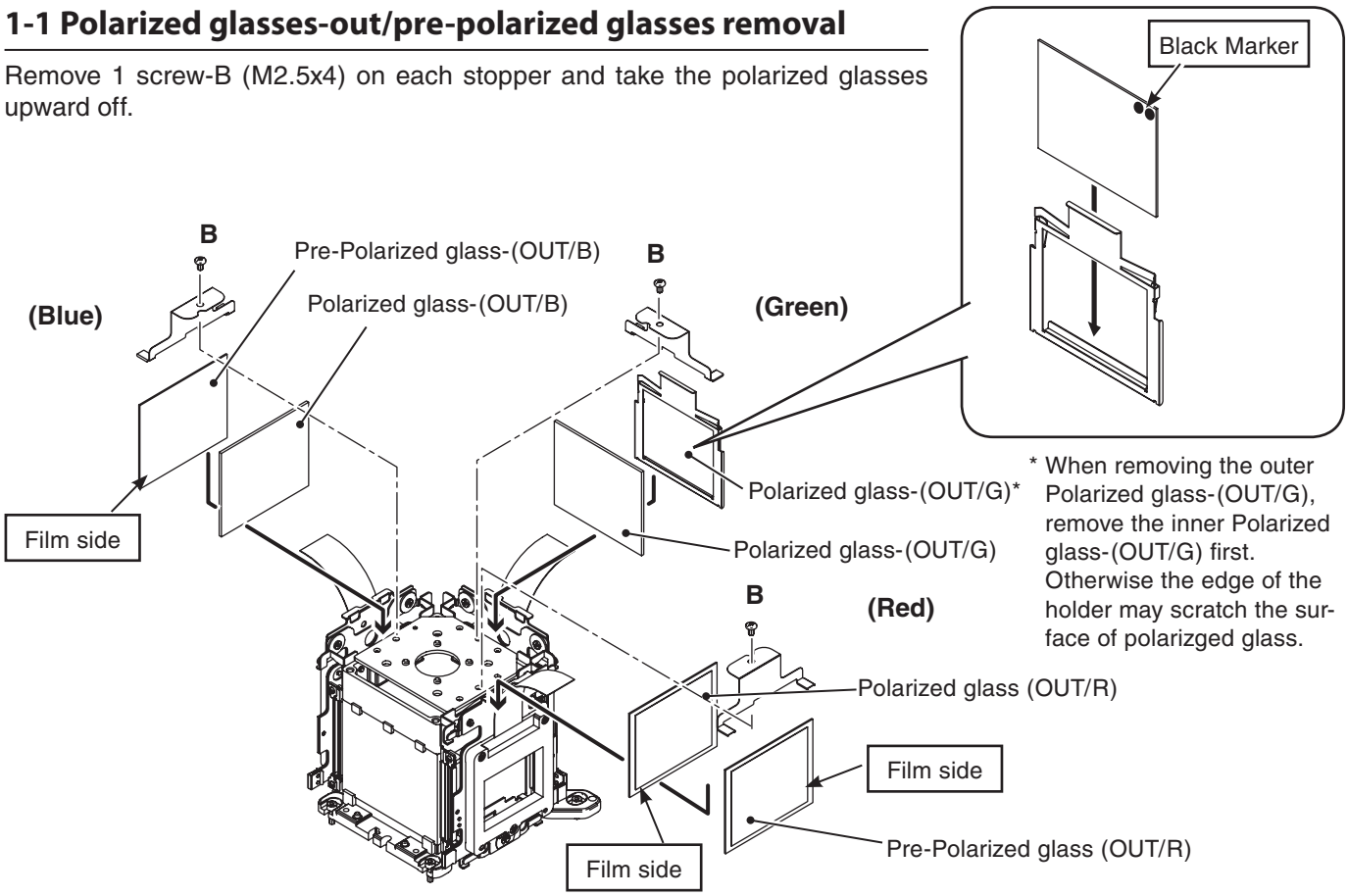

* When removing the outer Polarized glass-(OUT/G), remove the inner Polarized glass-(OUT/G) first. Otherwise the edge of the holder may scratch the surface of polarizged glass.

Mounting direction

Mount the pre-polarized glasses and polarized glasses as shown in the figure below.

LCD panel/Prism top view

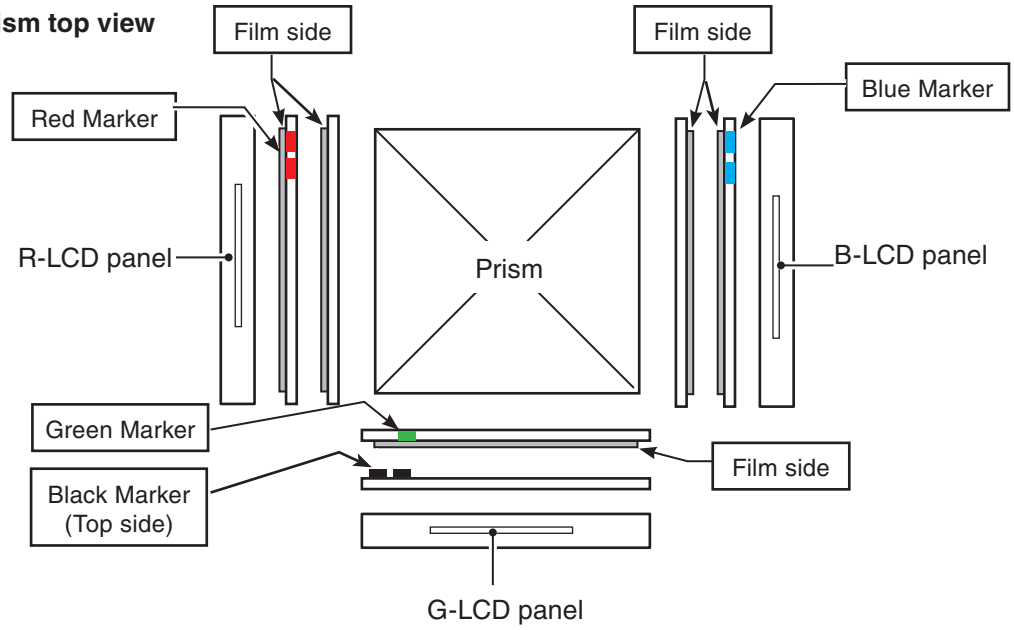

*** Note on handling the polarized glasses**
Polarized glass-(OUT/G) is very sensitive parts. Never touch or wipe the both surfaces. Grab the edge of the glass by new gloves when handling the polarized glass. When removing the dust on the surface, use a commercial (inert gas) air spray to remove them. Never use organic solvents.

1-2 LCD panels removal

Remove 3 screws-C (M2x6) on each LCD panel and remove the LCD panel.

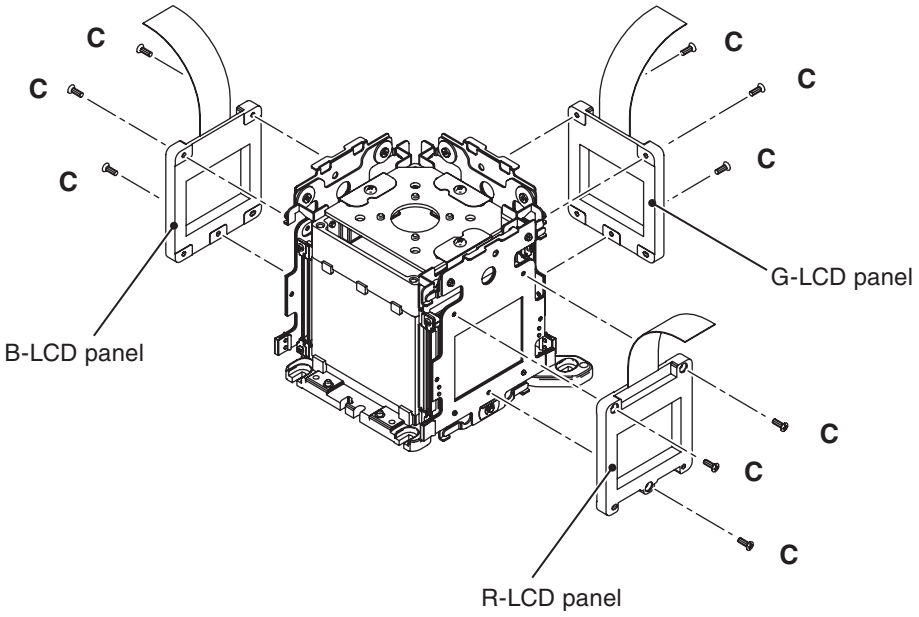

LCD Panel Type Check

There are 2 types combination of the LCD panel/prism assembly and the optical parts, named Type-R and Type-L. Since both have no compatibility, each type should be combined with the same type, and the specific parts should be used. If not, the poor optical characteristics may degrade the quality of a projected image.
Confirm the "R" label or "L" label on top of the LCD panel/ prism assembly and optical unit.

Confirm that both marking "R" is matched.

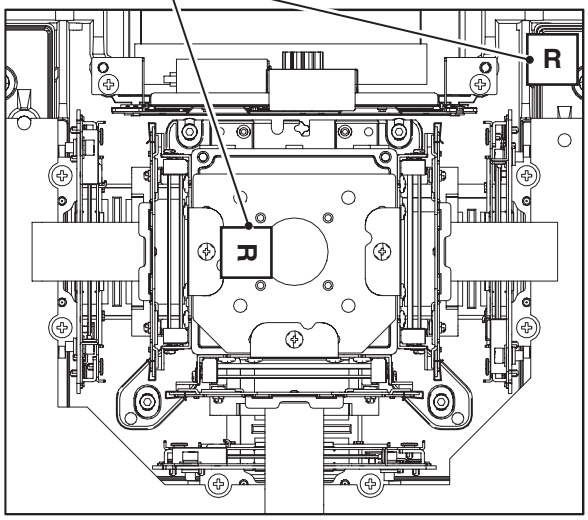

LCD Panel/Prism Ass'y Type-R

Confirm that both marking "L" is matched.

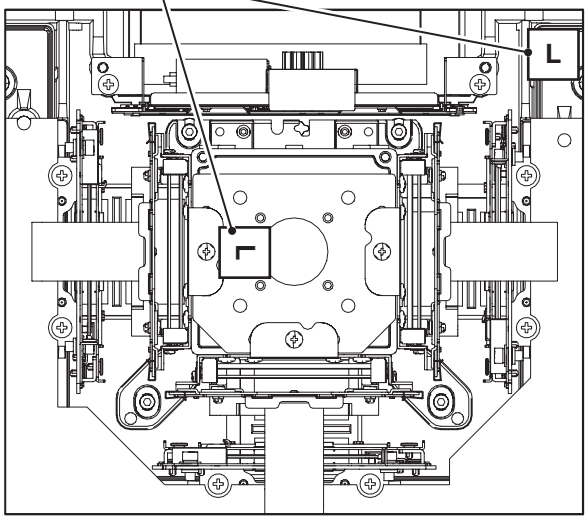

LCD Panel/Prism Ass'y Type-L

2 Polarized glass/Optical filter ass'y removal

Remove 2 screws-A (M3x6) on each stopper and take the polarized glasses upward off.

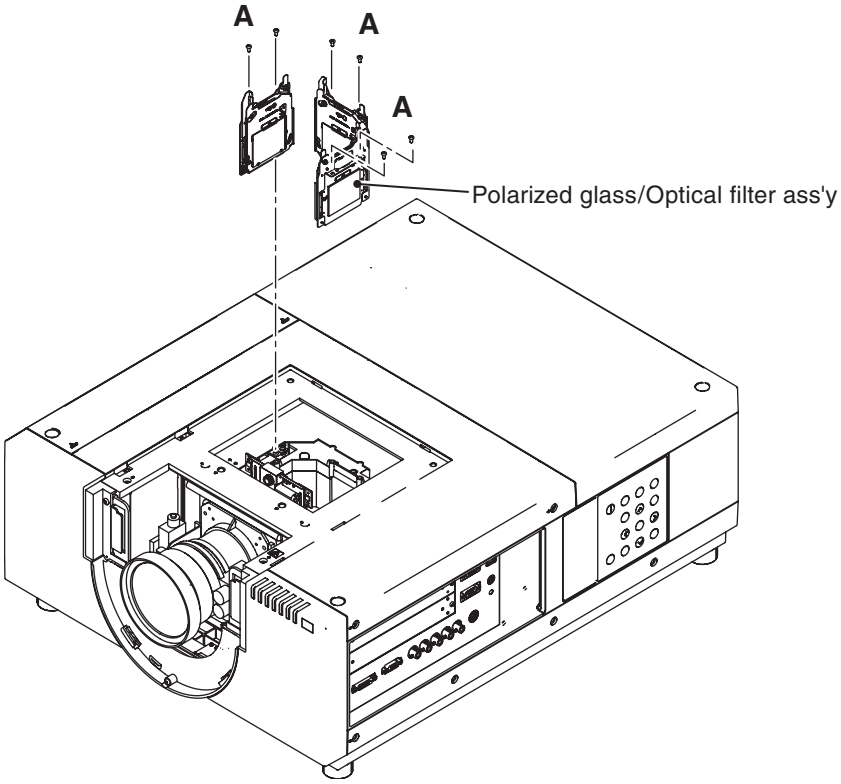

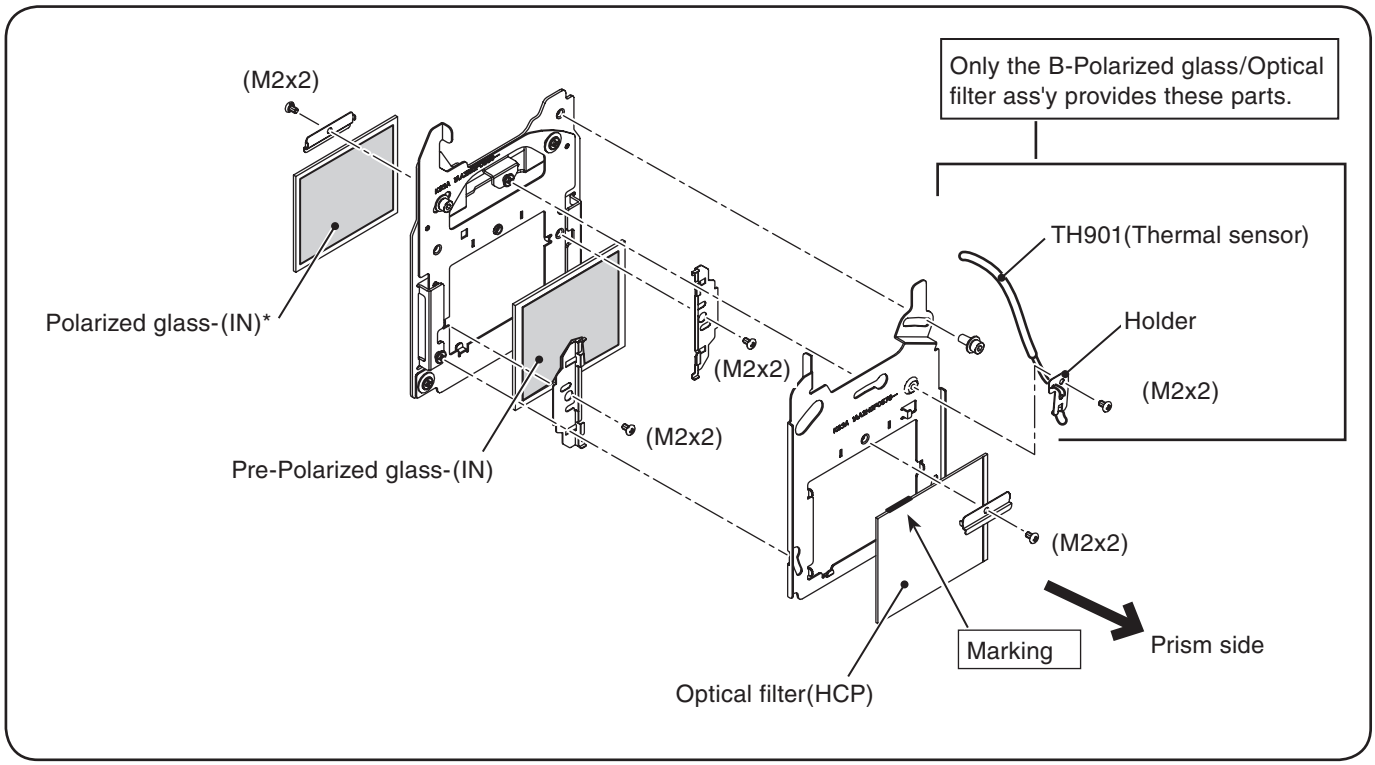

*** Note on handling the polarized glasses**
Polarized glass-(IN/GB) and Polarized glass-(IN/G) are very sensitive parts. Never touch or wipe the both surfaces. Grab the edge of the glass by new gloves when handling the polarized glass. When removing the dust on the surface, use a commercial (inert gas) air spray to remove them. Never use organic solvents.

2-1 Polarized glass-in/Optical filter mounting

There are 2 types combination of the LCD panel/prism assembly named Type-R and Type-L. Mount the polarized glasses and optical filters according to the type of the LCD panel assembly as shown in the figure below

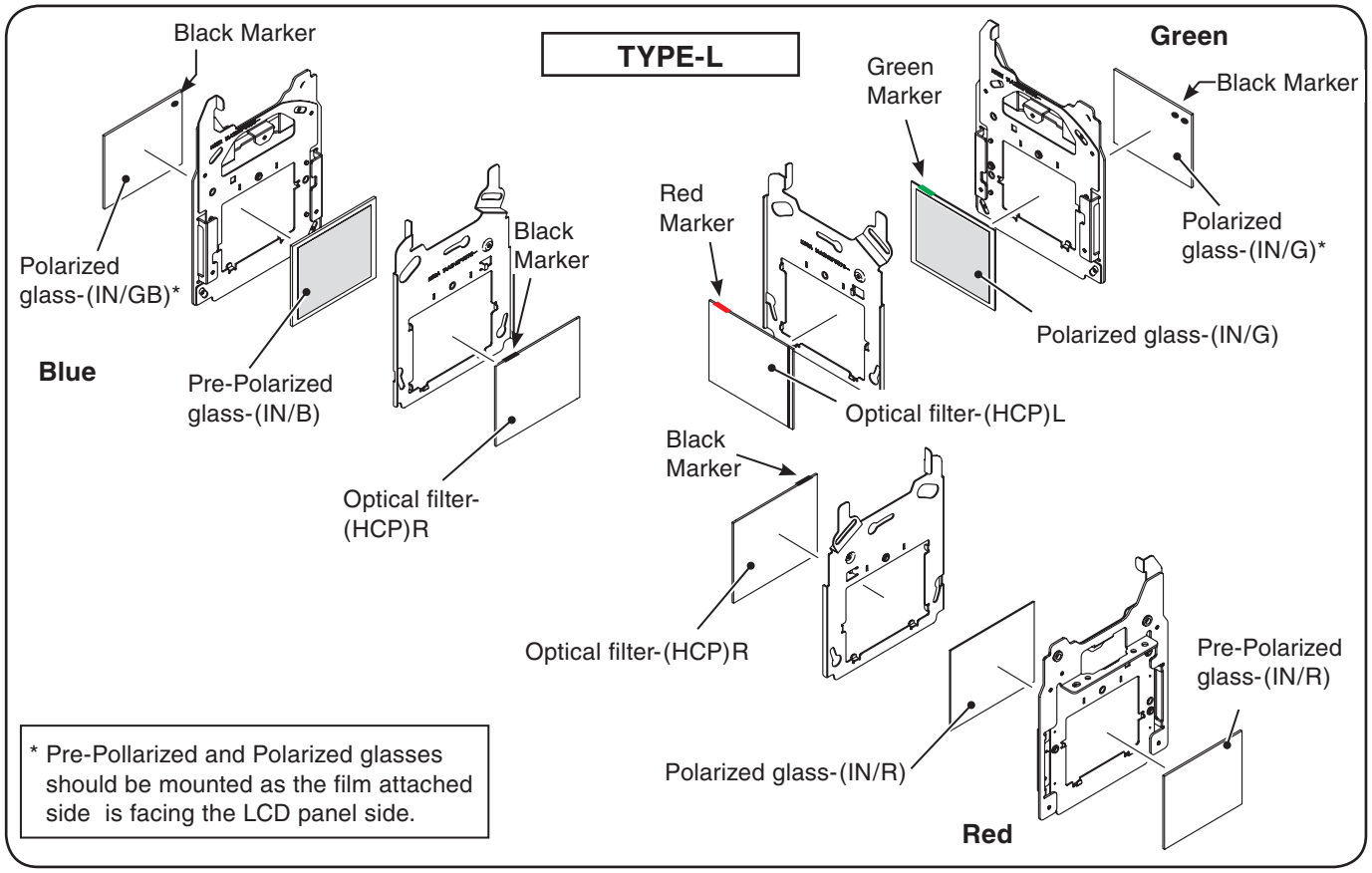

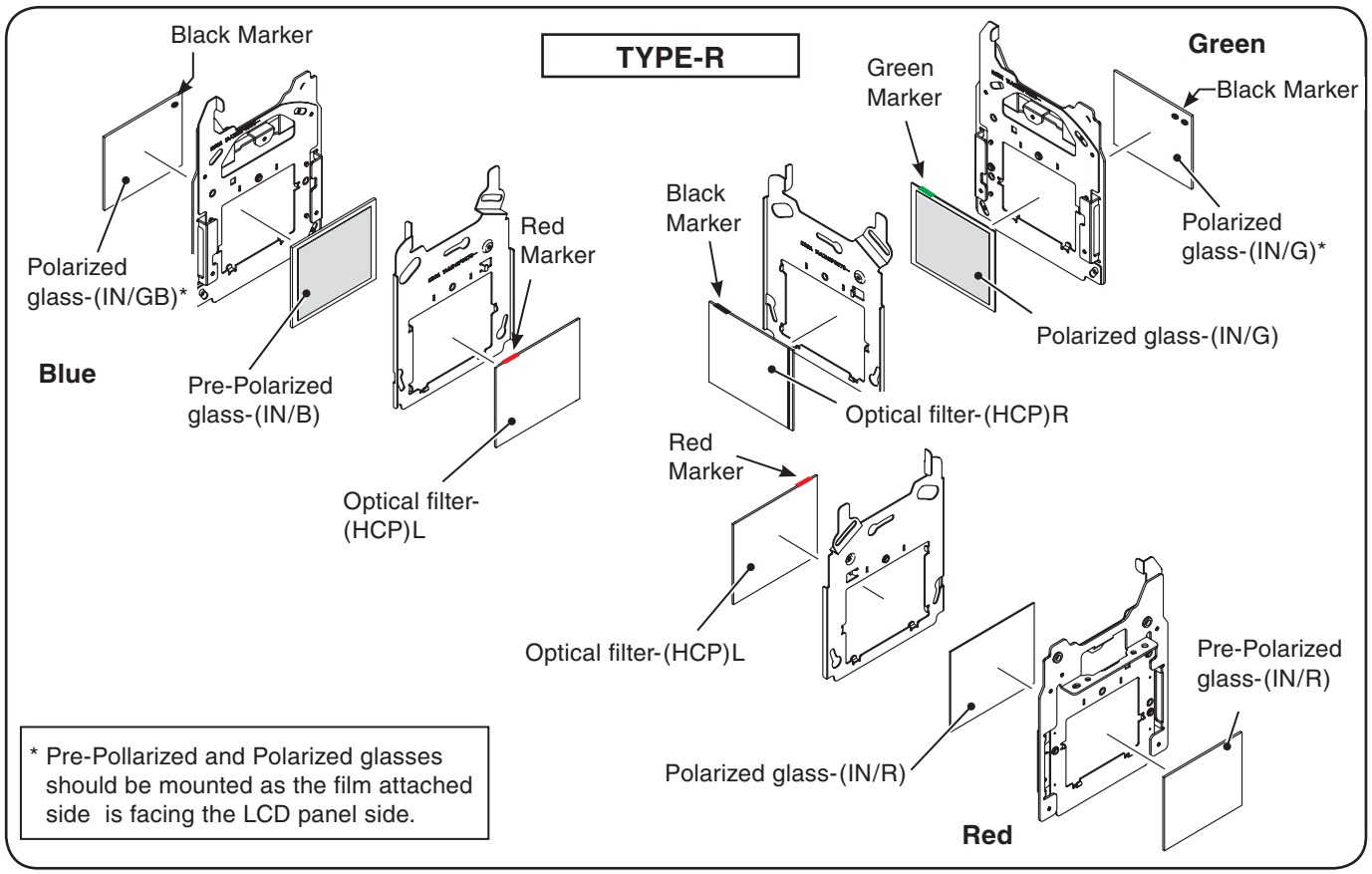

Remove the cabinet top ass'y and main board to take the following disassembly.

3 Optical filter (LC-CS) removal

Remove 2 screws-A(M3x6) and YE LCD Cover, and remove the Optical filter (LC-CS) upward off.

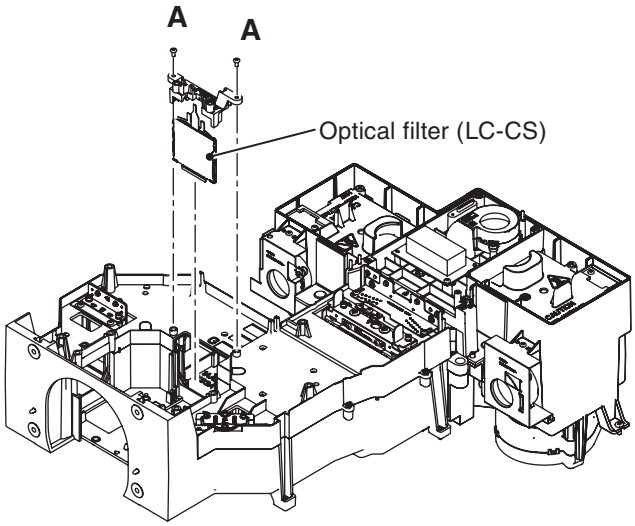

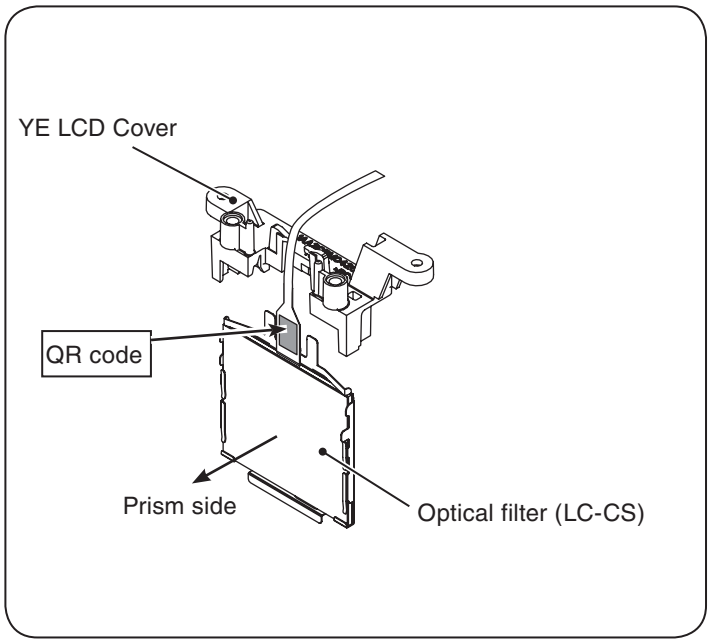

4 Integrator-in ass'y removal

Remove 2 screws-A(M3x6) and remove the integrator-in ass'y upward off.

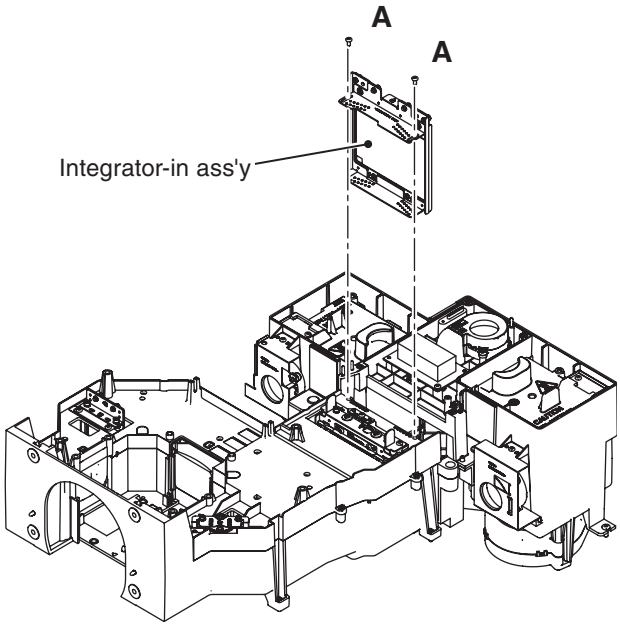

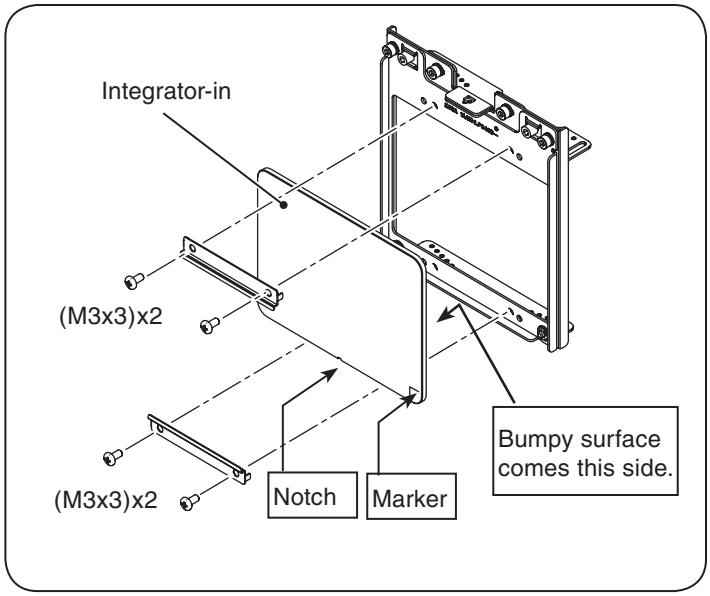

5 PBS/Integrator-out ass'y removal

Remove 2 screws-A(M3x6) and remove the PBS/Integrator-out ass'y upward off.

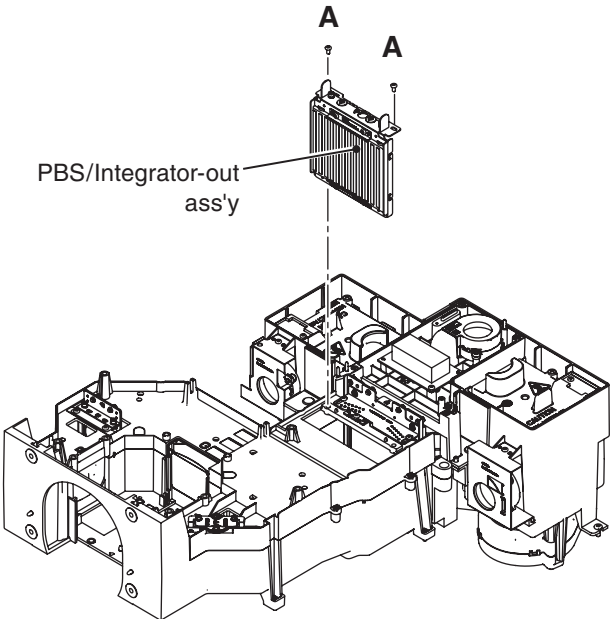

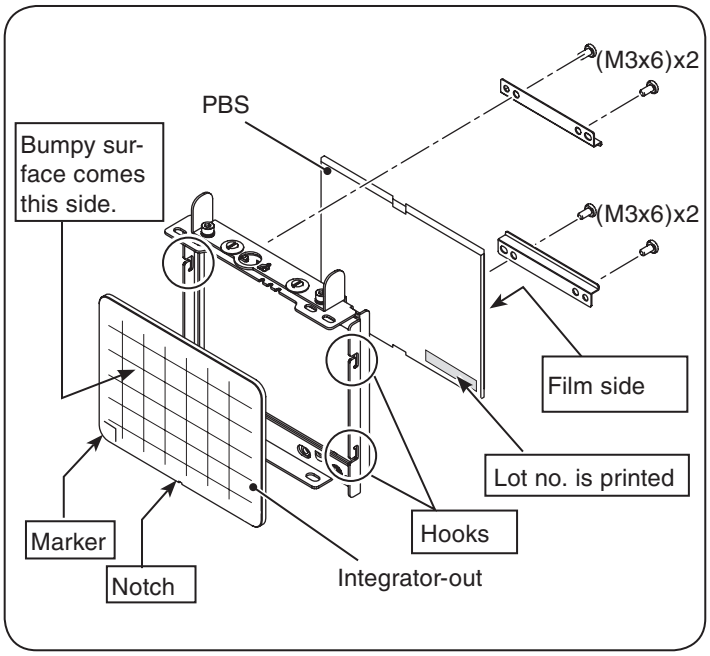

6 Mirror ass'y removal

Remove 2 screws-A(M3x6) and remove the mirror ass'y upward off.

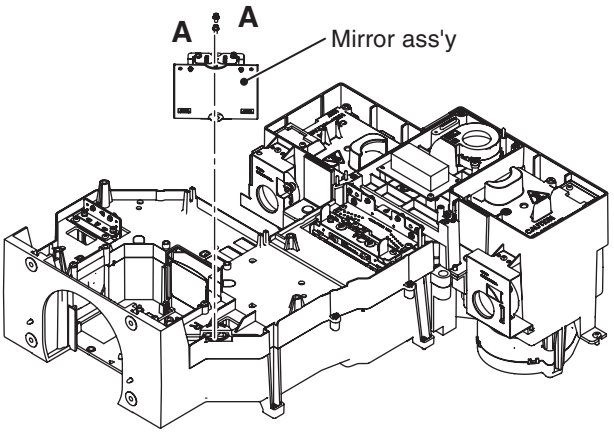

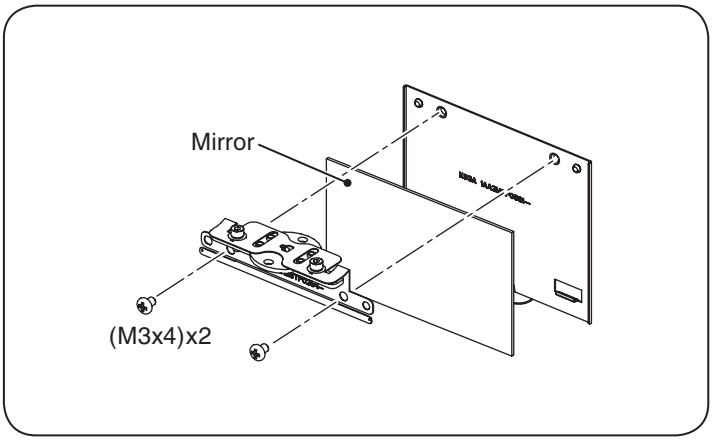

7 Relay lens ass'y removal

Remove 2 screws-A(M3x6) and remove the relay lens ass'y upward off.

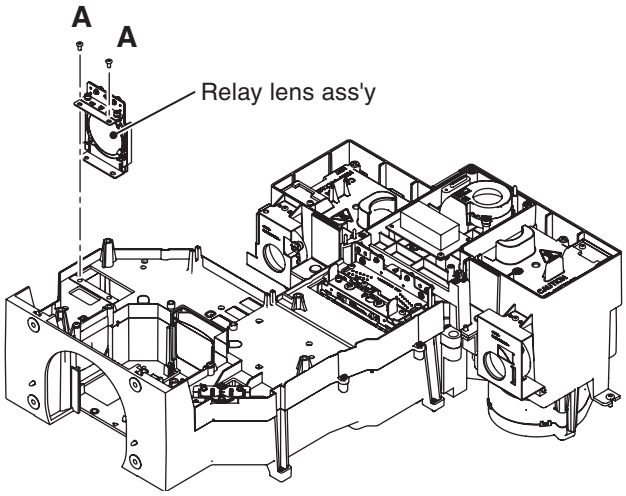

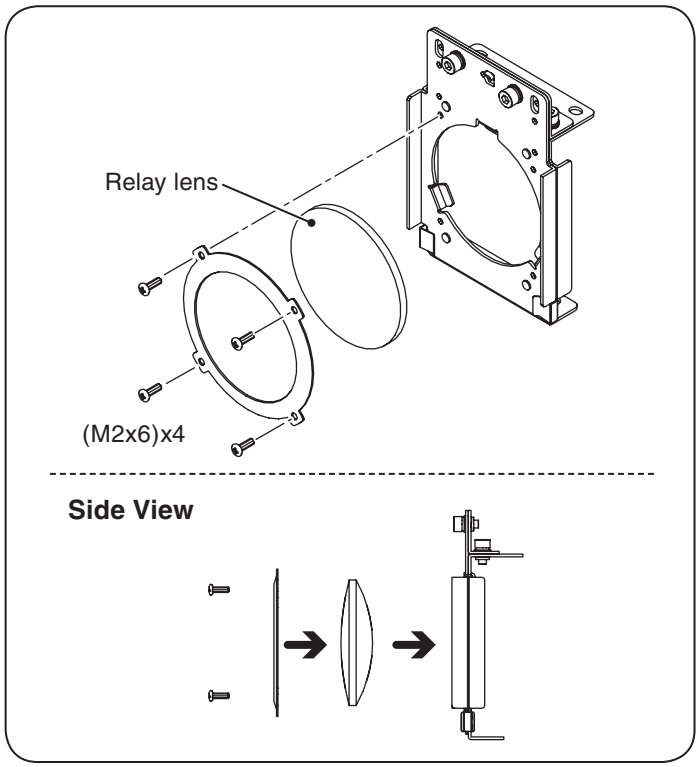

8 Optical unit top removal

Remove 8 screws-A(T3x12) and remove the optical unit top.

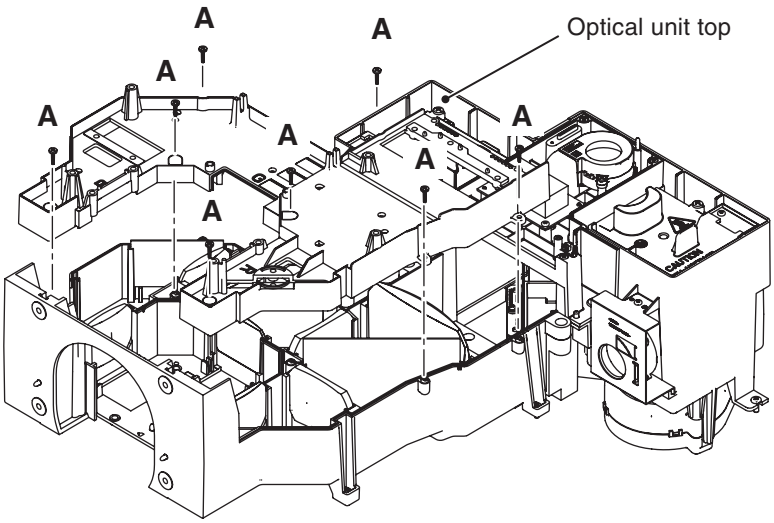

8-1 Optical parts locations in the optical unit

When mounting the optical parts in the optical unit, the parts must be mounted in the specified location and direction as shown in the figure below.

No.	Parts Name	No.	Parts Name
1	LENS, CONDENSOR(IN)	6	LENS, RELAY(IN)
2	LENS, CONDENSOR(OUT)	7	LENS, CONDENSOR(B)
3	LENS, CONDENSOR(R)	8	DICHROIC MIRROR (C)
4	LENS, CONDENSOR(G)	9	DICHROIC MIRROR (Y)
5	LENS, RELAY(IN)	10	MIRROR(B)

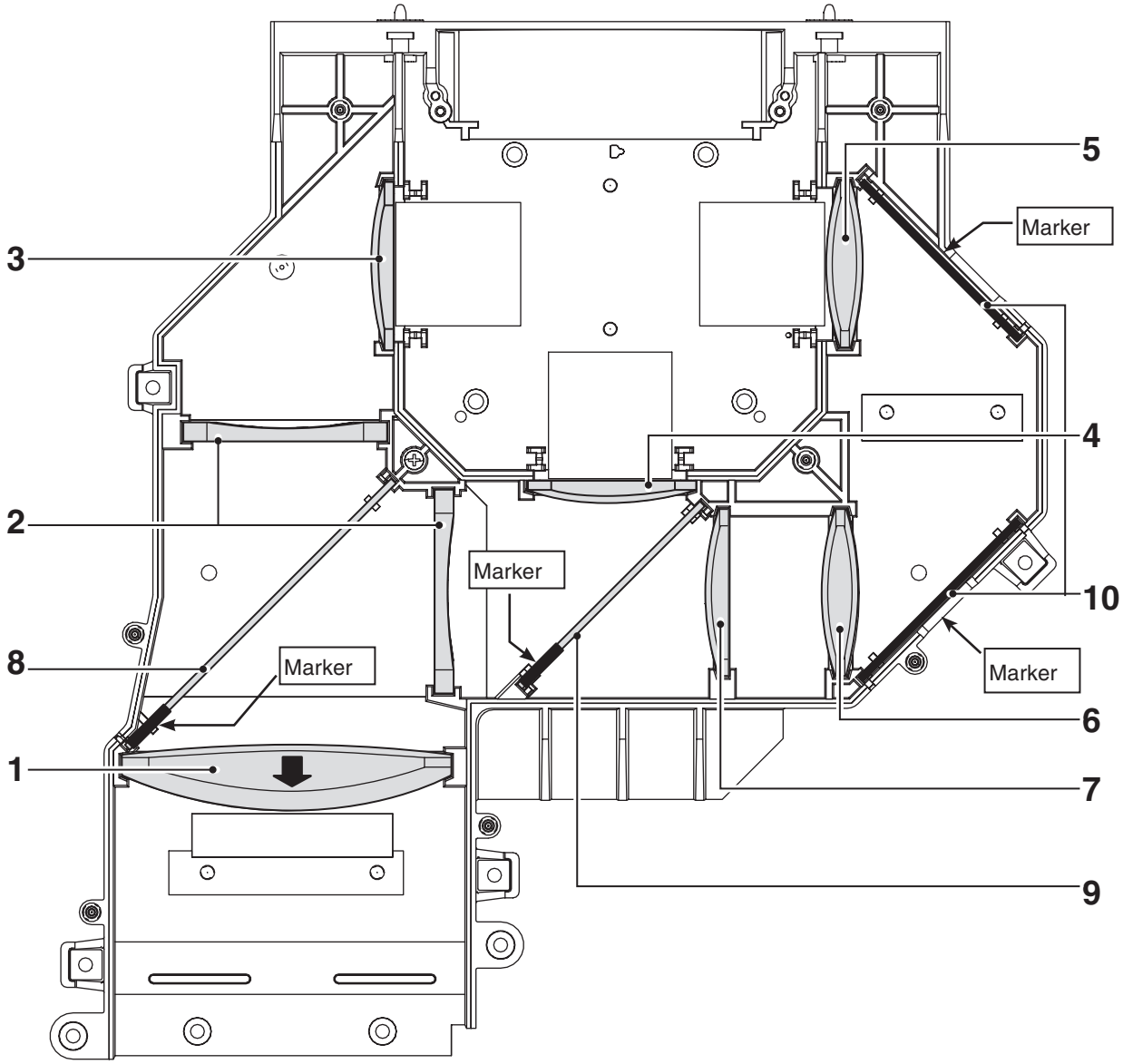

9 Optical lamp unit top removal

1 Loosen 2 screws on the each lamp house and take the lamp houses upward off.
2 Remove 2 screws-A(T3x8) and remove the lamp fan net board.
3 Remove 2 screws-B(T3x12) and remove the fan (FN912).
4 Remove 4 screws-C(M3x40) and screw-D(M4x6) and remove the optical lamp unit top.

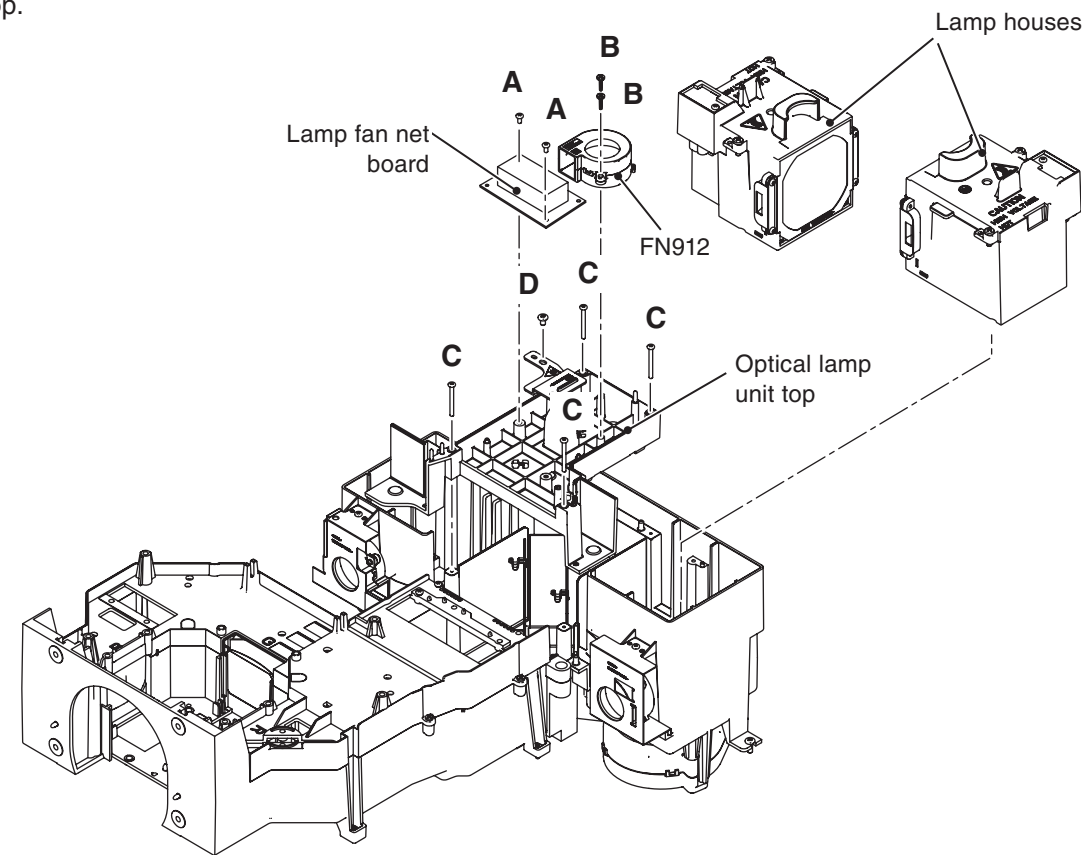

9-1 Optical lamp unit disassembly

Remove each 1 screw-A(M3x10) on the stopper of the mirror and remove mirror.

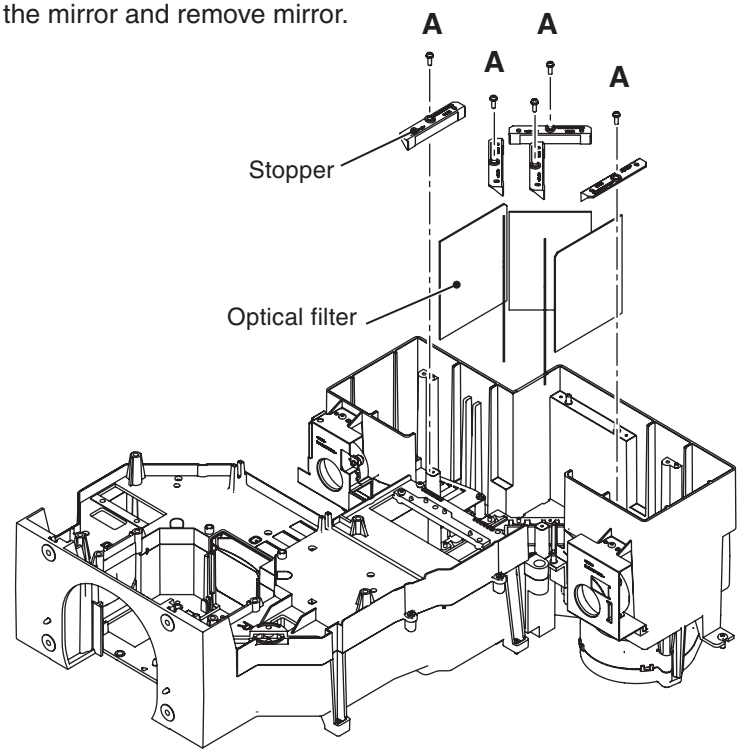

9-2 Optical parts locations in the optical lamp unit

When mounting the optical parts in the optical lamp unit, the parts must be mounted in the specified location and direction as shown in the figure below.

No.	Parts Name	No.	Parts Name
1	OPTICAL FILTER(UV/IR)	3	MIRROR(W-COLD)
2	MIRROR(HALF)		

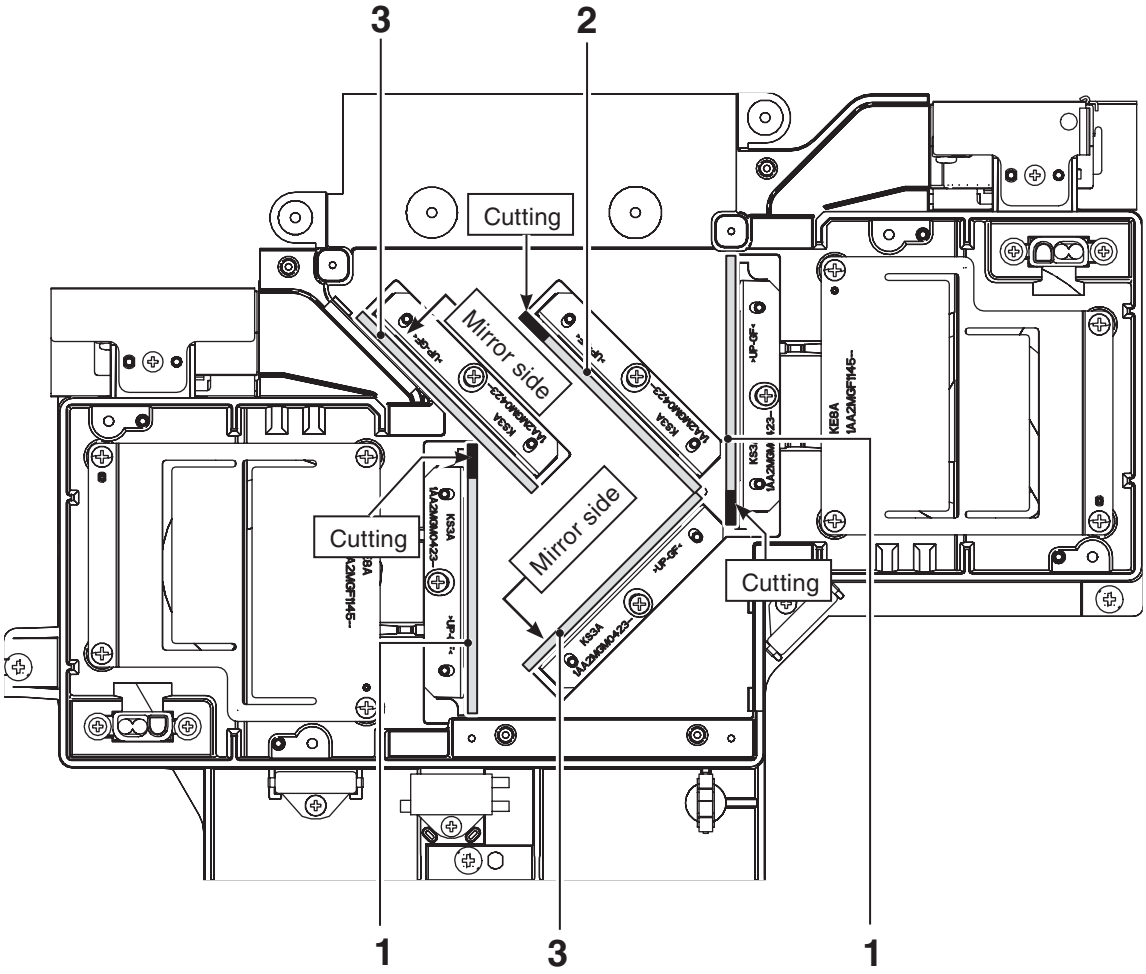

Adjustments

Adjustments after Parts Replacement

● : Adjustment necessary ❍ : Check necessary

		Disassembly / Replaced Parts						
		LCD/ Prism Ass'y	LCD Panel	Optical Parts	Main board	Power board	Power (DC) board	Fans Sensor (S901)
Optical Adjustment	Optical center adjustment			●				
	PBS adjustment			●				
	Contrast adjustment	●	●	●				
	Back focus adjustment	●	●					
	Convergence adjustment		●					
Electrical Adjustments	+6V adjustment					●		
	AV video signal adjustment (Y)				●			
	AV video signal adjustment (C)				●			
	LCD panel L/R setting				●			
	Fan driving voltage adjustment				●		●	●
	Gain adjustment 1 (PC)				●			
	Gain adjustment 2 (Composite)				●			
	Gain adjustment 3 (Component)				●			
	Common center adjustment	●	●		●			
	Gamma shipment adjustments*	❍	❍		●			
	Color shading correction adjustment*	❍	❍	❍	●			
	White balance adjustment	❍	❍	❍	●			
	Wind sensor calibration				●		●	●

* To setup or adjust those items, the Projector Service Tool v. 4.20 software is needed. Refer to the owner's manual for this software for the further details.

Note on Main Board Replacement

Take the following setting when the main board is replaced.
- Shipment data setting (Color Shading Correction, Gamma Shipment)
- Serial No. Setting

Adjustment Ship Data Setting
This projector stores "Color Shading Correction Data" and "Gamma Data" in the flash memory (IC1861) and memory (IC302/IC802) on the main board. Those shipping data have been setup according to the optical characteristics of the mounted LCD panels preciously in the factory. When replacing the main board, you need to read out the those setting data stored in the memory ICs on the previous main board and write down them into the memory ICs on the new main board. By this way, the projector enables to reproduce the picture which has properly adjusted color shading correction, gamma correction. For further details, refer to the operation manual of the software [PROJECTOR SERVICE TOOL v4.20].

Those software are included in the service CD-ROM listed below;
PROJECTOR SERVICE TOOL CD-ROM v4.20
SERVICE CODE: 610 343 5596

Optical Adjustments

Optical adjustment location

WARNING : USE UV RADIATION EYE AND SKIN PROTECTION DURING SERVICING.

CAUTION:
To prevent suffer of UV radiation, those adjustments must be completed within 25 minutes.

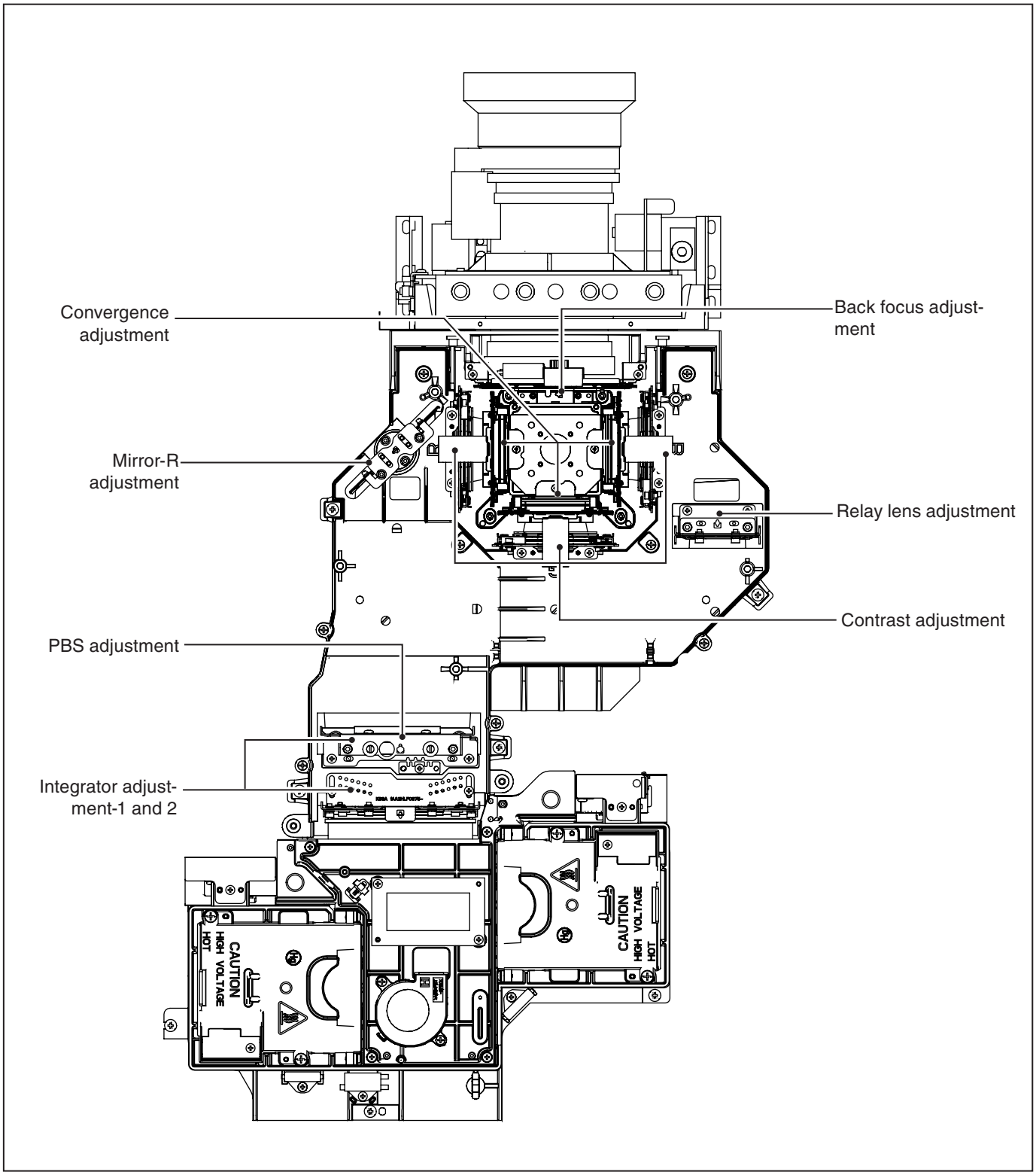

Before Adjustment

1. Each adjustment requires hex wrenches and slot screwdrivers.
2. Set the motorized lens shift to the center position (horizontal and vertical) with Lens Shift Button.
   Lens shift arrow on screen turns red at center of lens shift.
3. When adjusting optical components adjustments, using Standard Zoom Lens (LNS-S03) is recommended.
4. When adjusting the optical center adjustment, follow the following procedure.
   a) Disconnect the connectors K8E, K8N, K32A, K32B, K2R, K2G, K2B, K25Y and three flexible cables of the LCD panels from the main board.
   (Do not touch the electrode of flexible cables.)
   b) As shown in a figure right, set the main board to the upright position.
   c) Replace the polarized glass unit with the adjustment tool. This Adjustment tool can be ordered as a service part. The part no. is shown on next page.

   CAUTION: Do not short main board with the chassis. Protect main board with necessary isolation materials from shorting.

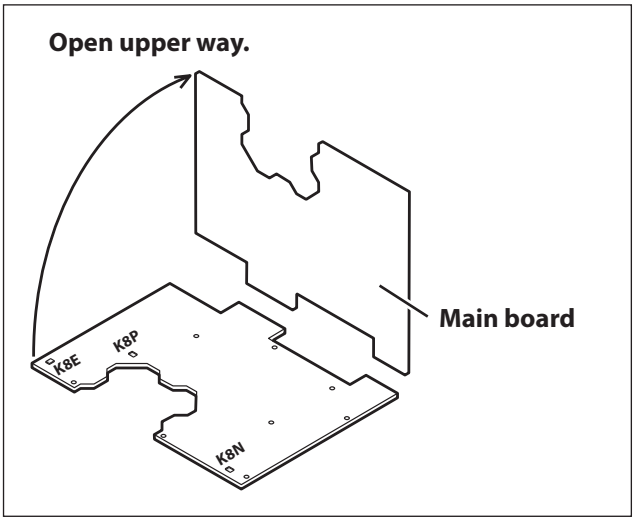

To select the internal test pattern

1. Press the MENU button.
2. Select the "Test Pattern" from the "Setting" menu.
3. Press the SELECT button. The test pattern menu appears on the screen.
4. Select a pattern name and press SELECT button.

To cancel the test pattern, press any of the buttons.

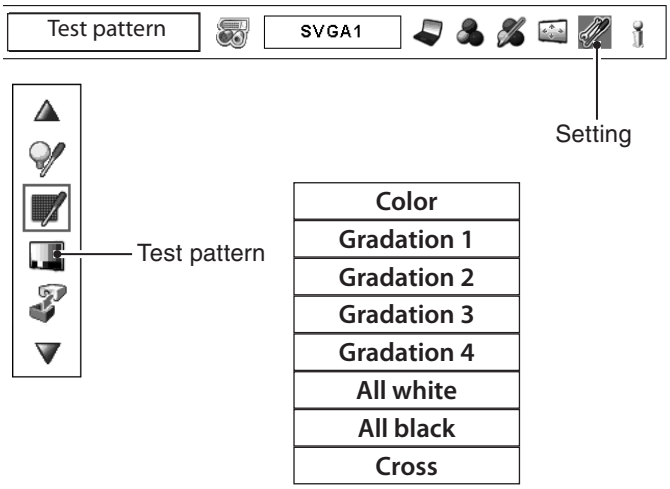

CAUTION:
When adjusting the optical components, do not insert any materials into the optical block for blocking the light. Or the optical block may be damaged by overheating or scratching the parts.

Optical adjustment tool installation

When performing the optical center adjustment, the optical adjustment tools are needed.

1. Remove each polarized glass/optical filter ass'y for Red, Green and Blue.
   Remove 2 screws-A on each polarized glass ass'y.

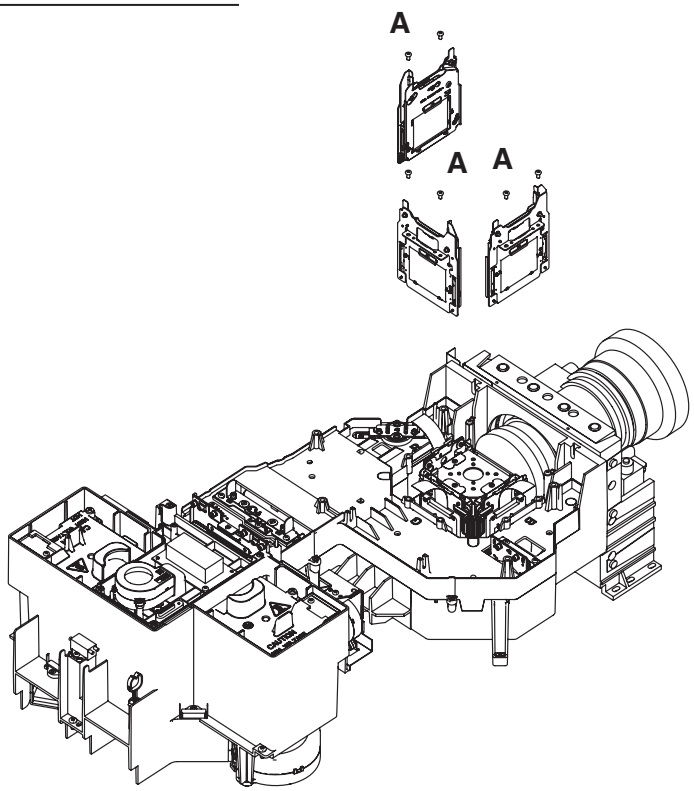

2. Replace the optical filter units.
   Remove 1 screw-B and remove the optical filter unit.
   Mount the optical adjustment tool and tighten the screw-B.
   (The three adjustment tools are the same.)
3. Install the polarized glass/optical filter ass'y.
   Install each polarized glass/optical filter ass'y, and tighten 2 screws-A on each polarized glass/optical filter ass'y.
4. After the optical center adjustment is performed, remove the optical adjustment tools and mount the optical filter units correctly.

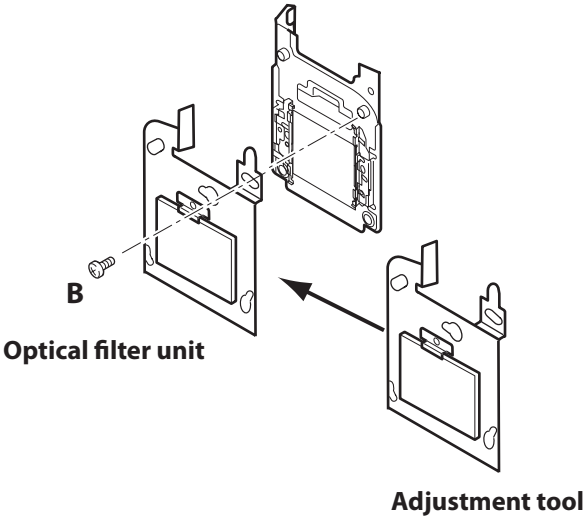

Replace the Adjustment tool

The special adjustment tool is needed when taking the optical center adjustment.
Give the following information to the dealer to order it.

Part Name ; OPTICAL FILTER-S
Service Parts No. 610 337 6394

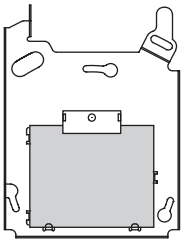

Adjustment tool

1. Optical Center adjustment

Take step-1 to step-4 for the optical center adjustment.
Disconnect the FPC cables of the panels and replace each polarized glass/optical filter ass'y with the adjustment tool. Set the main board into the groove on the optical unit top. (See the previous pages)

1 Integrator adjustment-1

1 Move the Integrator-out and Integrator-in to display the color bands on the top/bottom or left/right of the screen.
1) To adjust the image vertically as shown in **Fig.1-1**, loosen 2 screws **A**, and turn the screws **B** by using hex drivers.
2) To adjust the image horizontally as shown in **Fig.1-2**, loosen 2 screws **C**, and move the slot **D** by using a slot screwdriver.

2 Tighten screws **A** and **C** to fix the Integrator-out and Integrator-in unit.

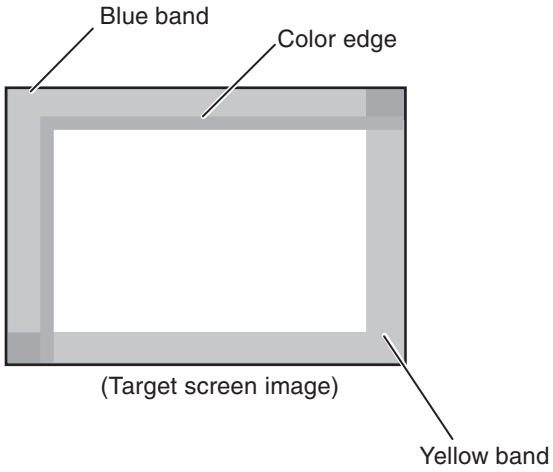

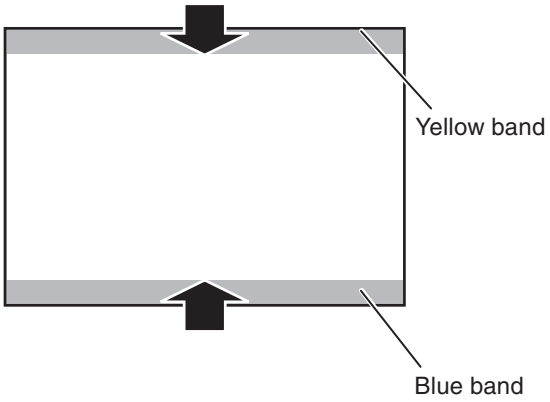

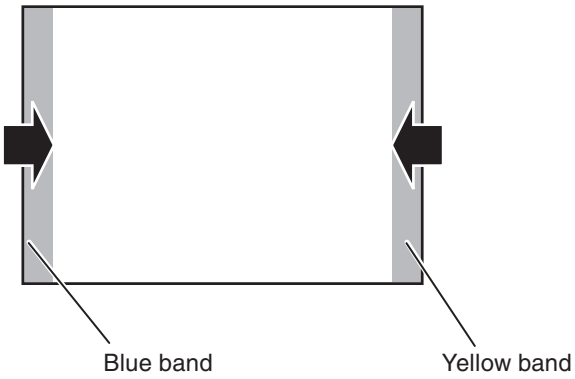

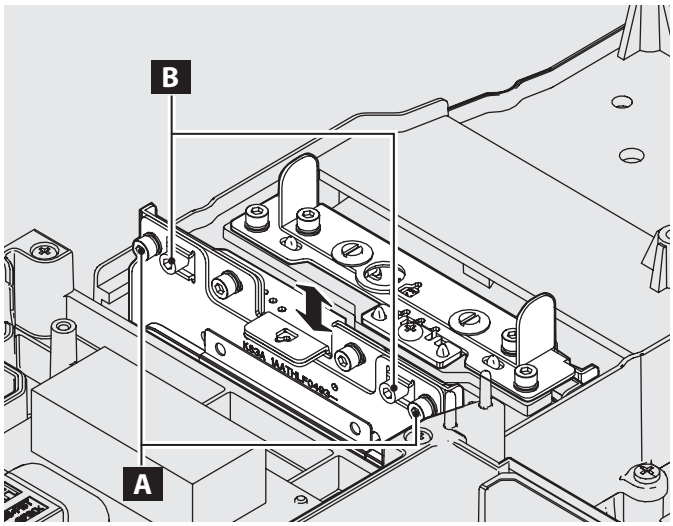

Fig.1-1

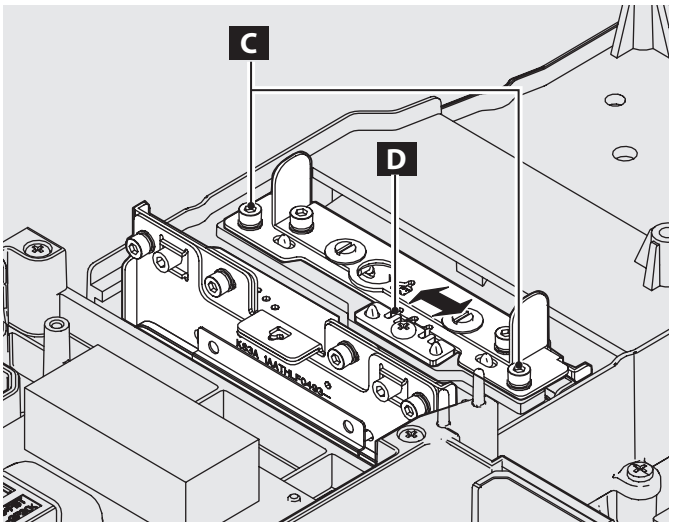

Fig.1-2

2 Mirror-R adjustment

1 Move the Mirror-R to adjust the color edge to be minimum.
1) To adjust the top of the coor edge as shown in **Fig.2-1**, loosen 2 screws **A**, and turn the **slot-B** by using a slot screwdriver.
2) To adjust theleft of the color edge as shown in **Fig.2-2**, loosen 2 screws **C**, and move the **slot-B** by using a slot screwdriver.

2 Tighten screws **A** and **C** to fix the Mirror-R unit.

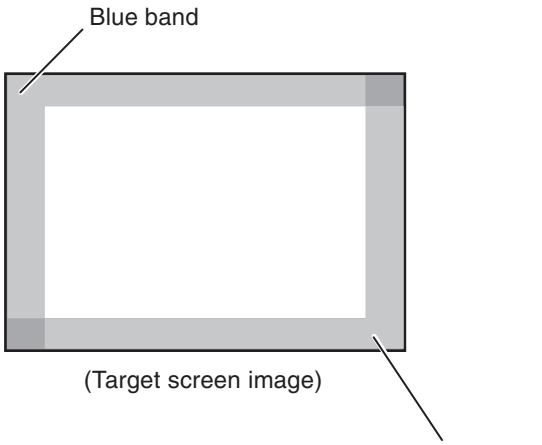

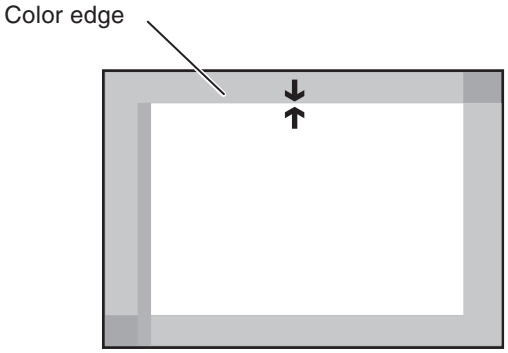

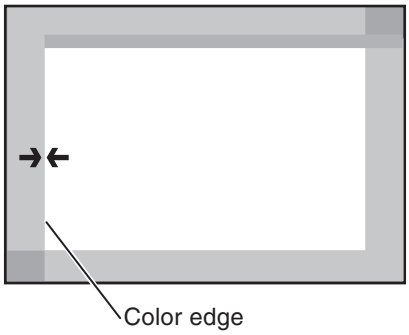

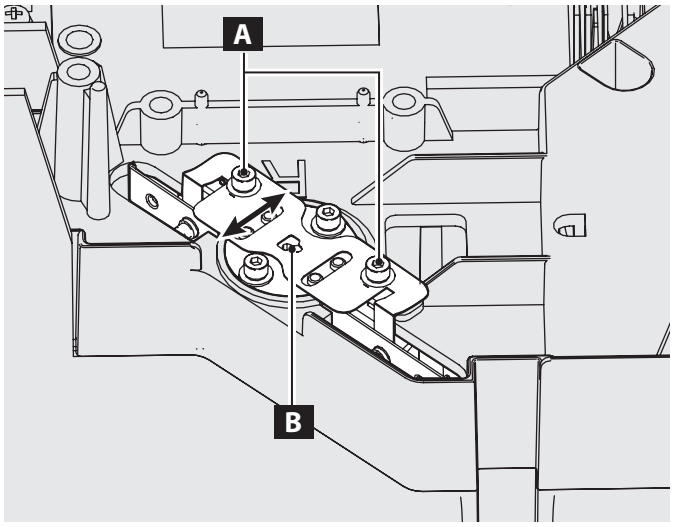

Fig.2-1

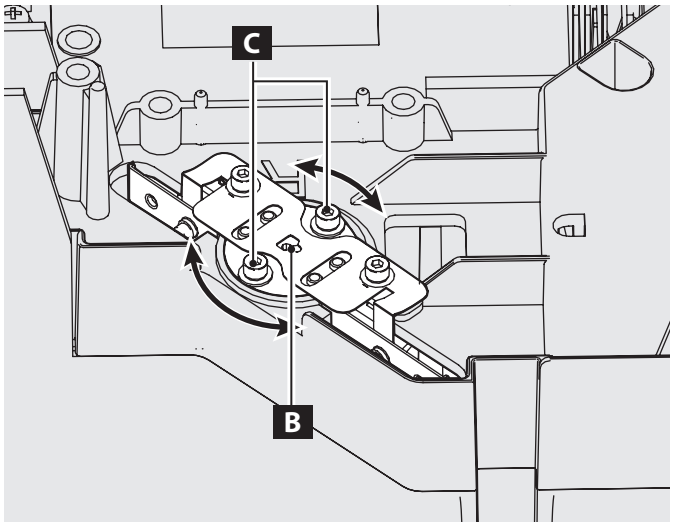

Fig.2-2

3 Relay lens adjustment

1 Move the Relay lens to make the same width of yellow and blue color-offset on the top/bottom and left/right of the screen.
1) To adjust the image vertically as shown in **Fig.3-1**, loosen 2 screws **A**, and move the **slot-B** by using a slot screwdriver.
2) To adjust the image horizontally as shown in **Fig.3-2**, loosen 2 screws **C**, and move the **slot-D** by using a slot screwdriver.

2 Tighten screws **A** and **C** to fix the Relay lens unit.

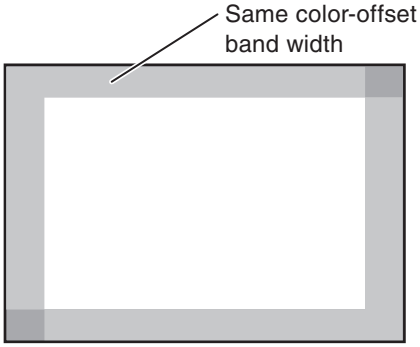

(Target screen image)

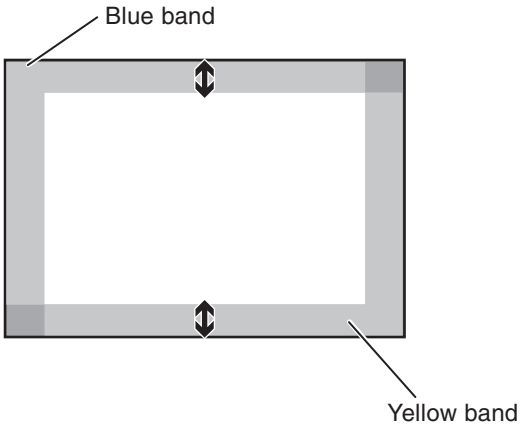

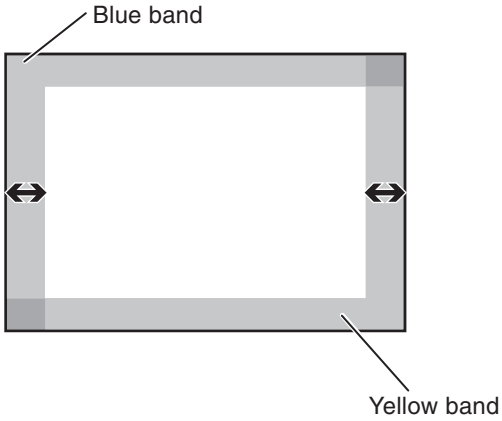

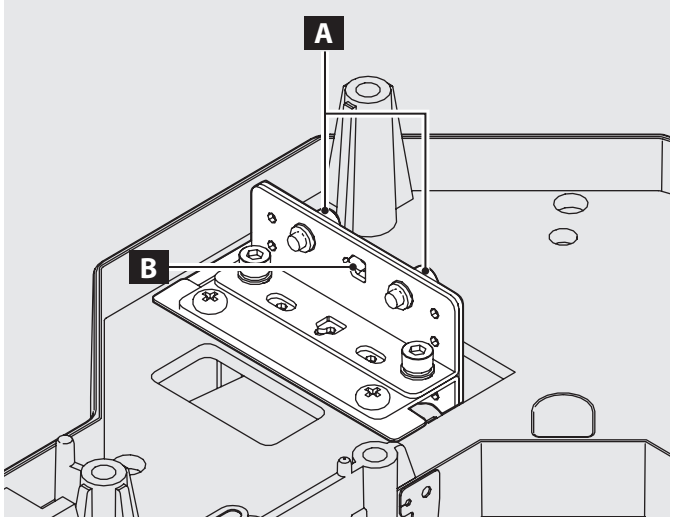

Fig.3-1

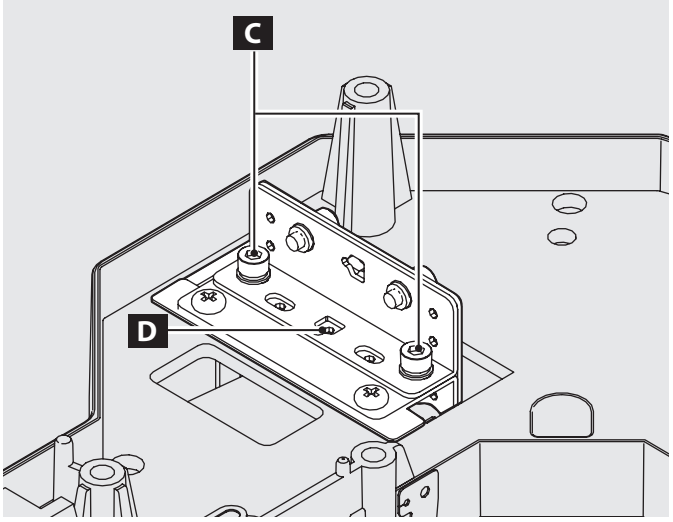

Fig.3-2

4 Integrator adjustment-2

1 Move the Integrator-out and Integrator-in to remove the color bands on the top/bottom or left/right of the screen.

1) To adjust the image vertically as shown in **Fig.4-1**, loosen 2 screws **A**, and turn the screws **B** by using hex drivers.
2) To adjust the image horizontally as shown in **Fig.4-2**, loosen 2 screws **C**, and move the slot **D** by using a slot screwdriver.

2 Tighten screws **A** and **C** to fix the Integrator-out and Integrator-in unit.

(Target screen image)

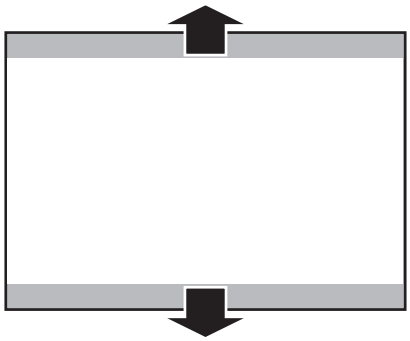

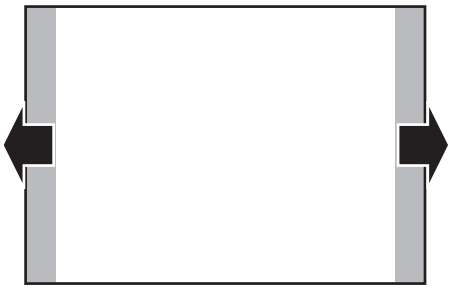

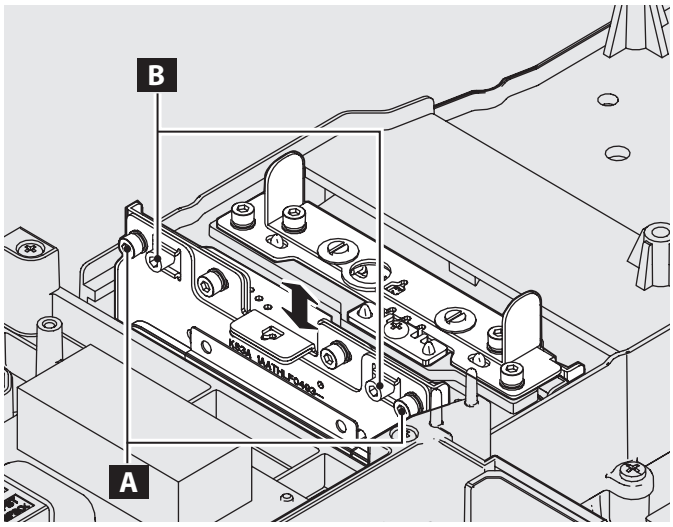

Fig.4-1

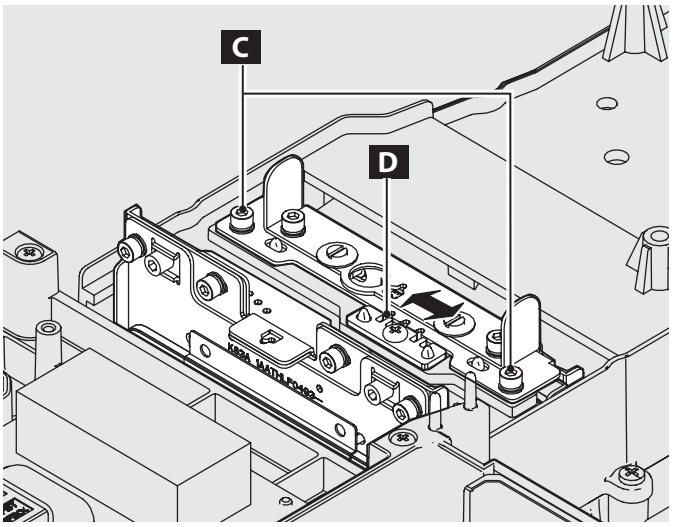

Fig.4-2

After completing the optical center adjustment, replace the optical adjustment tools with the polarized glass ass'y and connect the LCD panel cables on the main board.

2. PBS adjustment

1 Select the internal test pattern signal "All white" from the projector's menu "Menu -> Setting -> Test pattern".
2 Loosen 2 screws-A on the integrator-out unit.
3 Insert a slot screwdriver into the slot-B and turn it as the brightness on the screen is to be the maximum.
4 Tighten screws **A** to fix the Integrator-out unit.

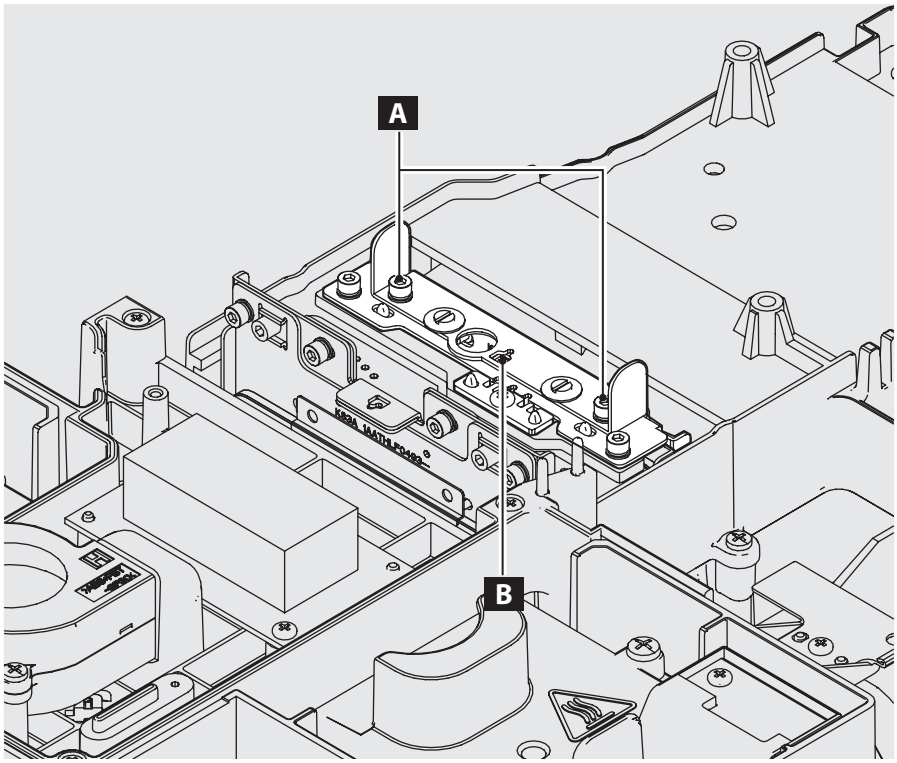

Fig.5

3. Contrast adjustment

1 Select the internal test pattern signal "All black" from the projector's menu "Menu -> Setting -> Test pattern".
2 Loosen 1 screw **A** on the polarized glass mounting base and 1 screw **C** on the optical filter(HCP) mounting base.
3 Turn the polarized glass mounting base with lever **B** to obtain the darkest brightness and proper black color uniformity on the screen.
4 Turn the optical filter(HCP) mounting base with lever **D** to obtain the darkest brightness and proper black color uniformity on the screen.
5 Tighten the screws **A** and **C** to fix the optical filter and polarized glass mounting base.

Repeat steps 1 to 5 for remaining R and B contrast adjustment.
The adjustment should be taken in order of G-panel, R-panel and B-panel.

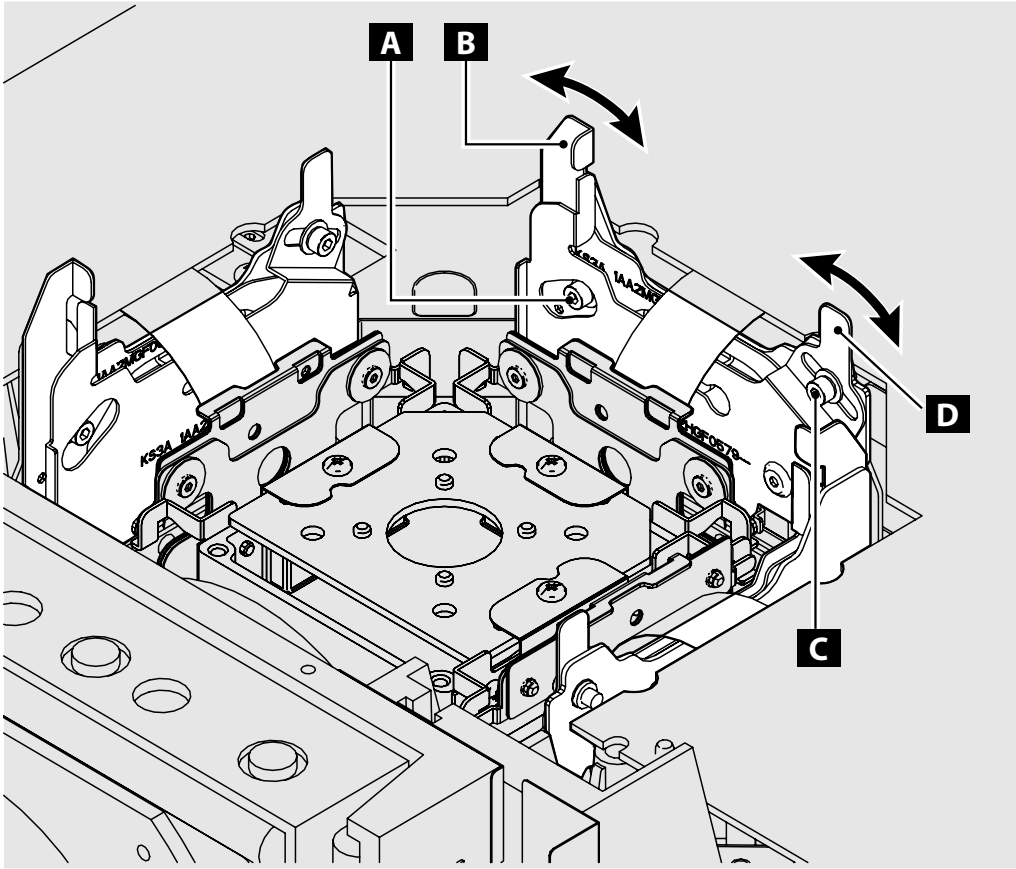

4. Back focus adjustment

LCD panel/prism top view

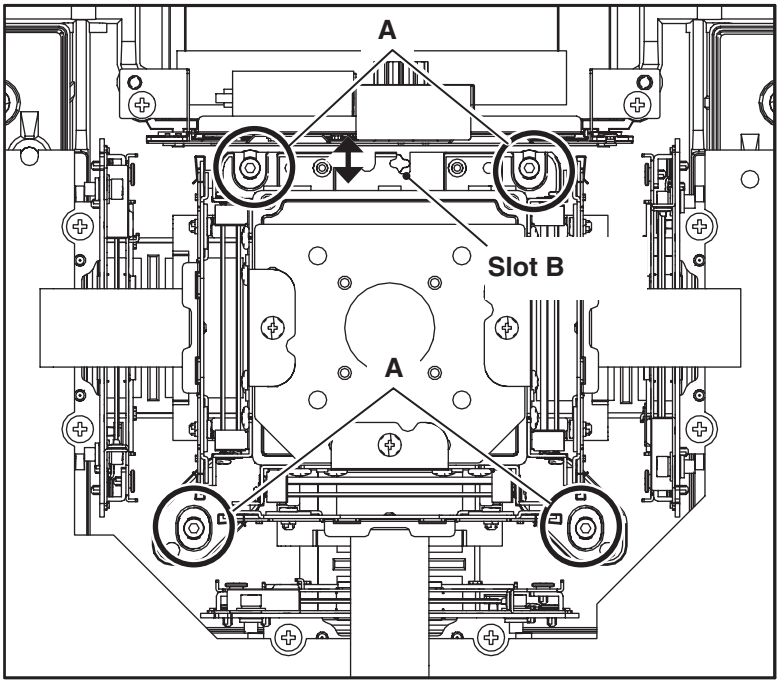

Before Adjustment :

1 Select the internal test pattern signal "Cross" from the projector's menu "Menu -> Setting -> Test pattern".
2 Adjust the focus by pressing the Focus ⌃ ⌄ buttons on the projector or remote control unit.
3 Press the Zoom ⌃ ⌄ buttons on the projector or remote control unit to set the TELE and WIDE. When focus is changed at TELE and WIDE, following adjustment is necessary.

Adjustment :

1 Loosen 4 screws-A using a hex wrench.
2 Set image size to the minimum, pressing the Zoom ⌄ button on the projector or remote control unit.
3 Adjust center part of grid pattern to sharp focus by pressing the Focus ⌃ ⌄ buttons on the projector or remote control unit.
4 Set image size to the maximum by pressing the Zoom ⌃ button on the projector or remote control unit.
5 Insert a slot screwdriver into slot-B, turn it and adjust center part and four corners on the grid pattern to be sharpened focus.
6 Repeat steps 2 to 5 until the focus does not shift by the ZOOM position between TELE and WIDE.
7 Tighten 4 screws-A to fix the assembly LCD panel / prism.

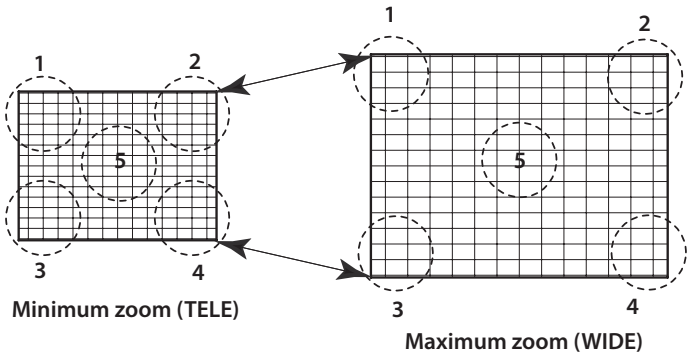

5. Convergence adjustment

Preparation

When adjusting the convergence of LCD panels, Convergence Adjustment Tool is required. This tool can be ordered as a service parts. Parts No. is shown below.
Mount the Adjustment Tool on the LCD panel and adjust each panel convergence.
Make sure each Red, Green and Blue LCD panel unit has been correctly installed before performing convergence adjustments.

[Note]

This convergence adjustment is especially designed for the service. It is not for the precise adjustment as the factory adjustment.

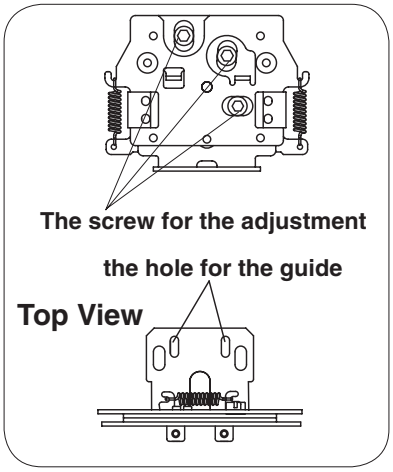

Convergence Adjustment Tool

Screw Setting

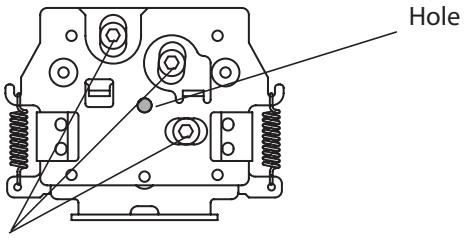

Adjust each screw for Hole can be seen clearly through the hole.

The convergence adjustment tool is needed when taking the convergence adjustment.
Give the following information to the dealer to order it.

Part Name ;ASSEMBLY CG ADJUST LCD
Service Parts No. 910 304 8209

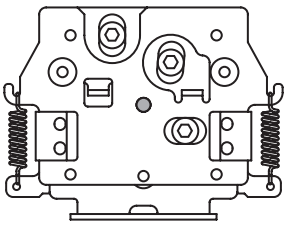

Adjustment tool installation

Note; Before mounting the Adjustment Tool, set adjustment screws of Adjustment Tool in center of the adjustment range.
Refer to Screw Setting.

1 Loosen 2 screws-A of Prism/LCD panel unit.
CAUTION: When loosening the screws-A, do not touch the other mechanical part or give it shock.
2 Fully loosen 2 screws-B on the Adjustment Tool.
3 Fully slide the Adjustment Tool part-A into the LCD Panel Bracket hole.
4 Mount Adjustment Tool on the Prism/LCD panel unit with 2 screws-C attached with Adjustment Tool along the guide on top of Prism Ass'y.
CAUTION: Do not use other kind of screws for mounting, otherwise Prism/LCD panel unit may be damaged.
5 Tighten screws-B and hold the LCD Panel Bracket.

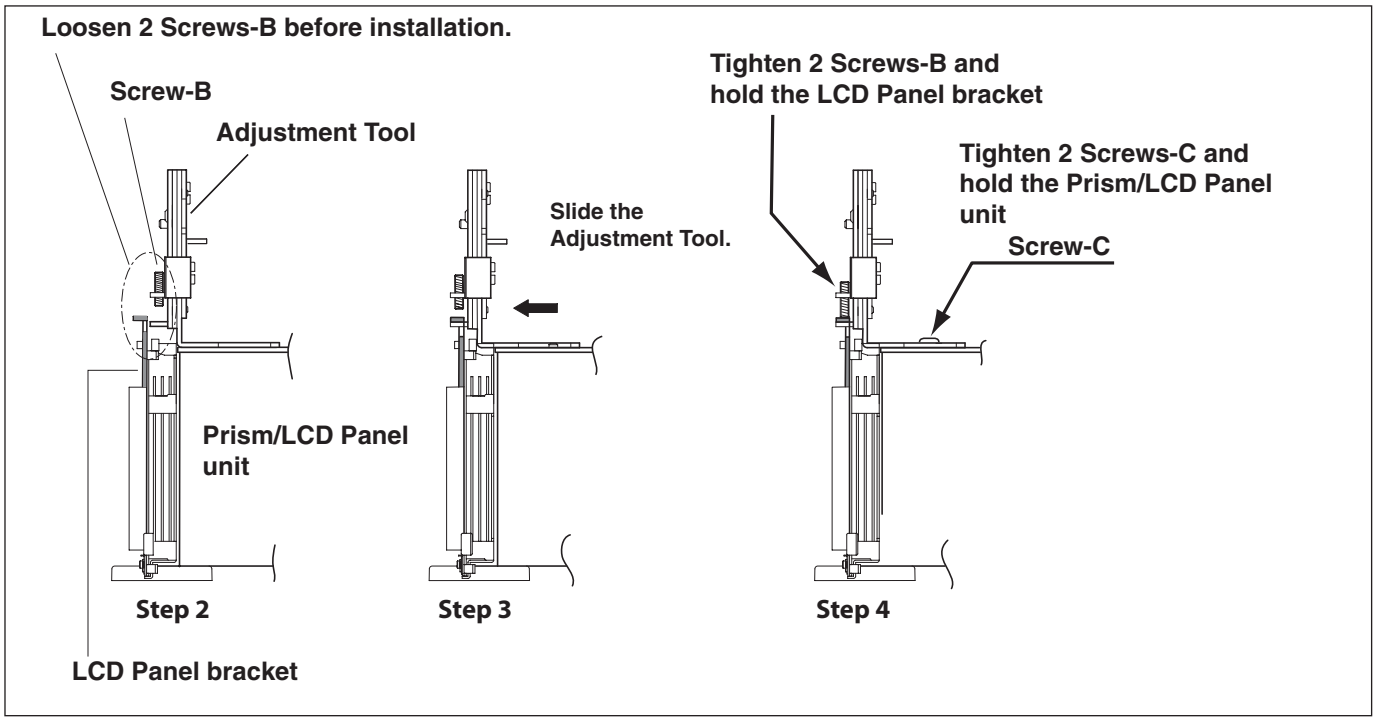

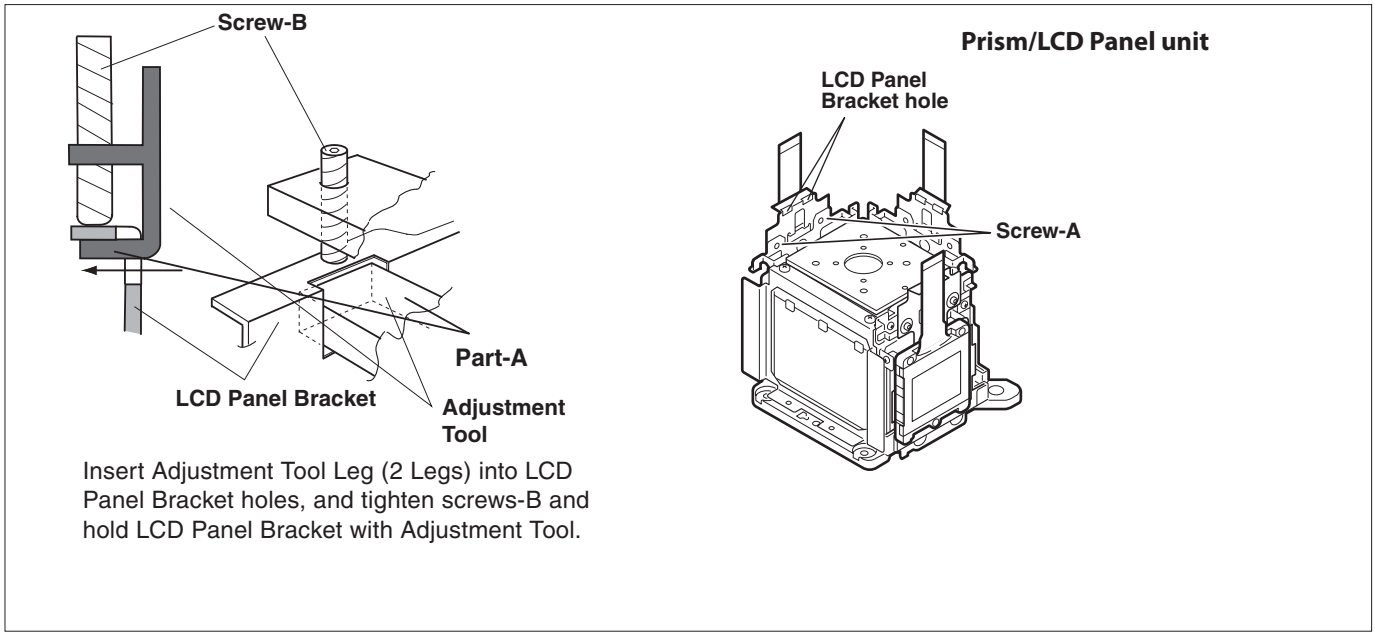

Insert Adjustment Tool Leg (2 Legs) into LCD Panel Bracket holes, and tighten screws-B and hold LCD Panel Bracket with Adjustment Tool.

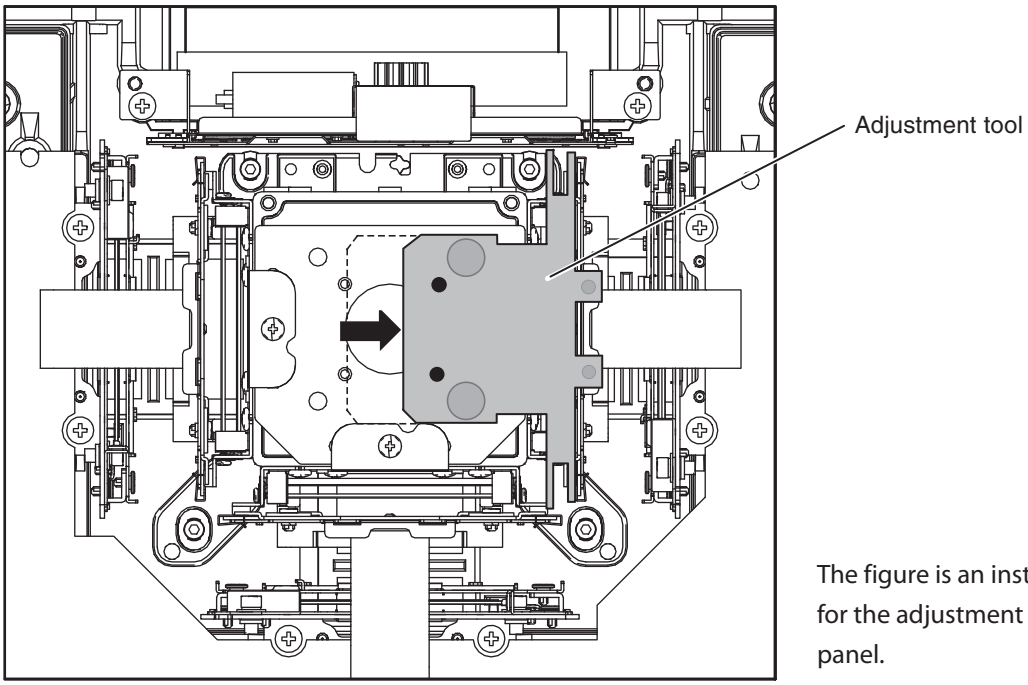

The figure is an installation figure for the adjustment of the Blue LCD panel.

Adjustment tool removal

After completing the adjustment, remove the Adjustment Tool as follows.

1 Loosen 2 screws-B and release LCD Panel Bracket.
Remove 2 screws-C, then remove Adjustment Tool.

2 Slide the Adjustment Tool, and release from the LCD Panel Bracket.

3 Remove the Adjustment Tool upward.

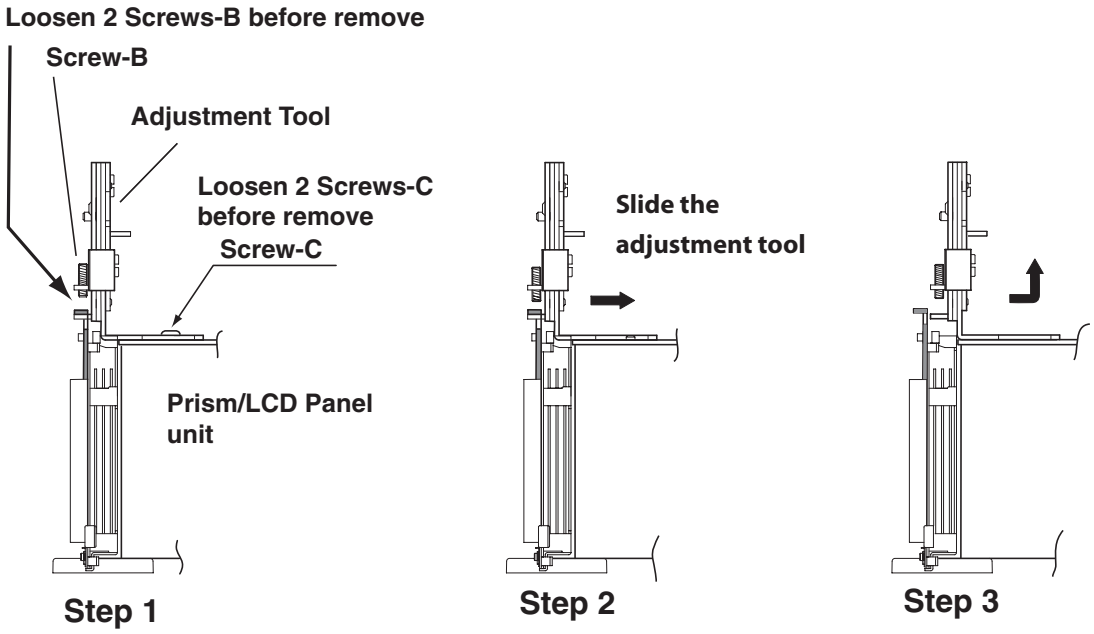

Adjustment

For convergence adjustment, use Green as the reference standard. Align Red and Blue with Green by adjusting the position and angle of the Red and Blue LCD panel. Screws X, Y and Z are for convergence adjustment. When adjusting the Green reference LCD panel, both on Red and Blue LCD panel should be adjusted with Green LCD panel.

[Before adjustment]
Make sure each Red,Green and Blue LCD panel unit has been correctly installed, and that all focus adjustments have been completed before preforming convergence adjustments.

Caution

Do not insert the object into the optical block for blocking the light, otherwise, optical parts may be damaged.

Line Movement and Screw Turning

1. Adjustment screw "Z" to turns the line.
2. Adjustment screw "X" to moves the line right and left.
3. Adjustment screw "Y" to moves the line up and down.

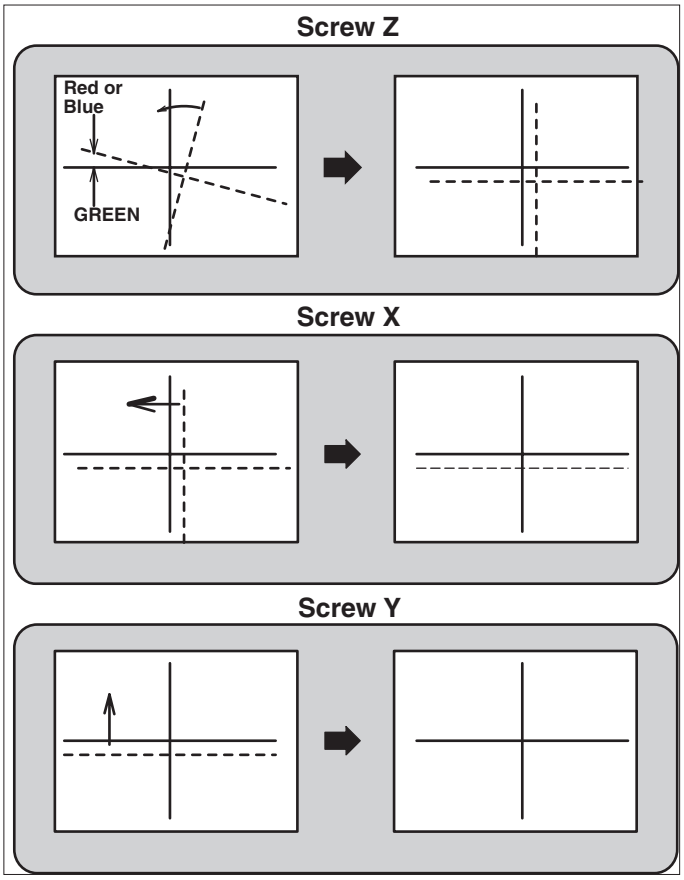

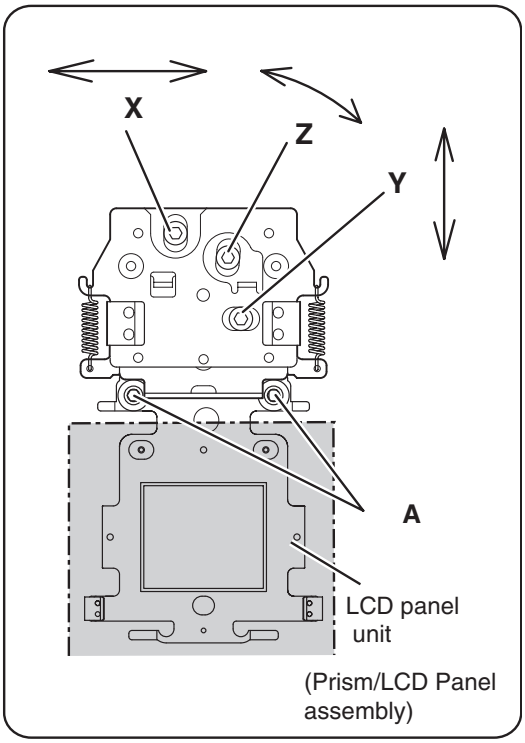

Red (or Blue) Panel convergence adjustment

1 Select the internal test pattern signal "Cross" from the projector's menu "Menu -> Setting -> Test pattern".
2 Turn the Red lines to be paralleled with Green lines by adjusting screw-Z.
3 Adjust screw-X to converge Red and Green vertical lines.
4 Repeat steps 2 and 3 until Red and Green vertical lines converged properly.
5 Adjust screw-Y and converge Red and Green horizontal lines properly.
6 Repeat step 2,3 and 5 until Red and Green lines converged properly.
7 Tighten screws-A.
8 Remove Adjustment Tool from Prism/LCD panel unit.

Note; If Red and Blue lines do not converge with green lines, loosen screws-A of Green reference panel and adjust Green panel slightly.

Note; When removing the convergence adjustment tool after adjustment, loosen screws-B of Adjustment Tool first, otherwise adjustment may be changed.

Electrical Adjustments

Service Adjustment Menu Operation

To enter the service mode

To enter the “Service Mode”, press and hold the **MENU** and **SELECT button** for more than 3 seconds, or press and hold the **MENU button** on the remote control for more than 20 seconds. The service menu appears on the screen as follows.

To adjust service data

Select the adjustment group no. by pressing the **MENU button** (increase) or **SELECT button** (decrease), and select the adjustment item no. by pressing the pointer ⌃ or ⌄ **button**, and change the data value by pressing the ⌬ or ⌭ **button**. Refer to the “Service Adjustment Data Table” for further description of adjustment group no., item no. and data value.

To exit the service mode

To exit the service mode, press the **ON/STAND-BY button**.

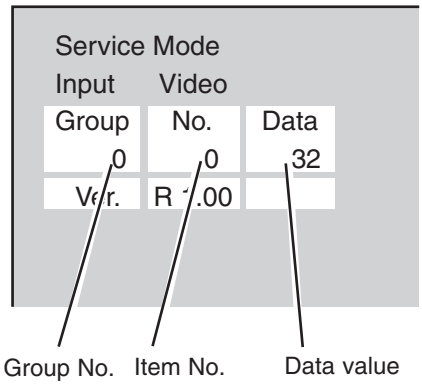

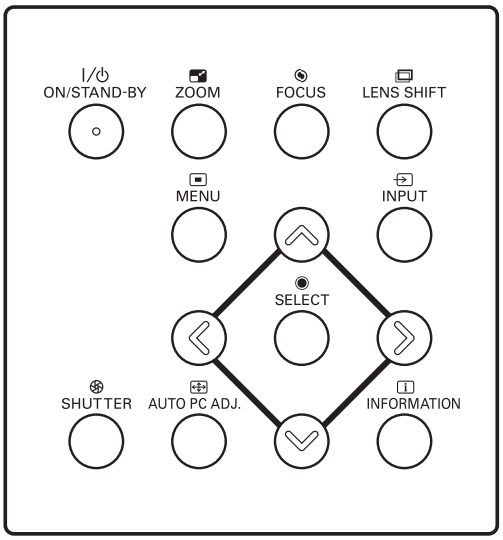

Circuit Adjustments

CAUTION: The each circuit has been made by the fine adjustment at factory. Do not attempt to adjust the following adjustments except requiring the readjustments in servicing otherwise it may cause loss of performance and product safety. Before taking these adjustments, turn the projector for more than 10 minutes to stabilize the operation.

WARNING : USE UV RADIATION EYE AND SKIN PROTECTION DURING SERVICING.

CAUTION:
To prevent suffer of UV radiation, those adjustments must be completed within 25 minutes.

[Adjustment Condition]

● Input signal
Analog Computer signal..... 0.7Vp-p/75Ω terminated (XGA)
Composite Video signal ... 1.0Vp-p/75Ω terminated (NTSC / PAL)
Component Video signal .... 0.7Vp-p/75Ω terminated (480i, 480p, 720p, 1080i)

16 steps gray scale pattern

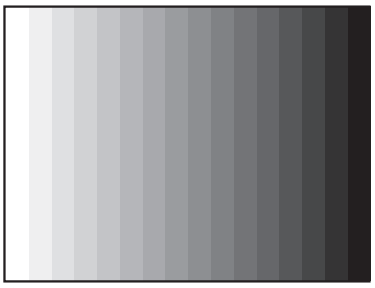

100% full color bar pattern

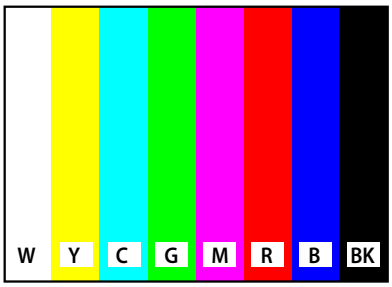

● Picture control mode ..... “STANDARD” mode unless otherwise noted.
● Lamp control..... “Normal” mode unless otherwise noted.

Note:
* Please refer to “Service Adjustment Menu Operation” for entering the service mode and adjusting the service data.

Disabling the Wind Sensor Function

When the Main Board is replaced with new one, the projector detects the clogged filter and rolls up the filter until it ends because the wind sensor setting value in the memory IC on the new board is not setup correctly. To avoid this operation, disable the wind sensor function temporarily following to the procedure below.

1. Enter the service mode, select group no. "**170**" and item no. "**4**". Change data value from "**1**" to "**0**". Now the function of wind sensor is disabled.
2. After completing the "Fan driving voltage adjustment", set up to enable the function of the wind sensor. (Group no. "**170**" , Item no. "**4**", Data value is set to "**1**")
3. Execute the adjustment "Filter calibration".

1. +6V adjustment

Adjust the voltage by using **VR652** on the power board as following.

Connection	Adjustment value
(+) 2pin of K6D on the Power Board	**6.35 ± 0.05V**
(–) Chassis GND	

2. AV video signal adjustment (Y)

Equipment	Oscilloscope
Input mode	Video mode (Composite)
Input signal	100% color bar
Picture mode	Normal

1. Enter the service mode.
2. Connect an oscilloscope to test point.
3. Change data value.
   Adjust the amplitude **A** to be the value below.

Group	No.	Connection	Adjustment value
300	**- 2**	**TP211**	**0.7 ± 0.05V**

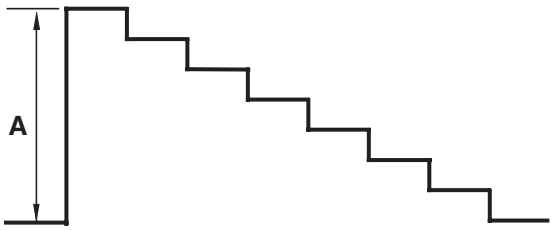

3. AV video signal adjustment (C)

Equipment	Oscilloscope
Input mode	Video mode (Component)
Input signal	100% color bar
Picture mode	Normal

1. Enter the service mode.
2. Connect an oscilloscope to test point.
3. Change data value.
   Adjust the amplitude **A** to be the below.

Group	No.	Connection	Adjustment value
300	**- 3**	**TP221**	**0.7 ± 0.05V**

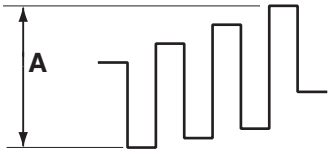

4. LCD Panel L/R Setting

1. Enter the service mode.
2. Check the data value. (290 - 0)

Group	No.	Value	Panel type
290 -	**0**	**0**	**L**
290 -	**0**	**20**	**R**

3. To change the set panel type, select 290-1.

Group	No.	Value	Panel type
290 -	**1**	**0**	**L**
290 -	**1**	**10**	**Initial**
290 -	**1**	**20**	**R**

The initial data of 290 -1 is "10". To set the value for Type L, set the value to "0". To set the value fr Type R, set the value to "20". When the value set "0" or "20", it automatically returns to initial data "10" after the setup.

There are two type(Type L, Type R) for the LCD/Prism Assy. The adjustment data is stored in the memory IC (IC1861) on the Main Board.
As the used type is indicated on the Optical unit and LCD/Prism Assy, perform this adjustment to match to its type indication.

5. Fan driving voltage adjustment

Equipment	Digital voltmeter
Lamp mode	2 Lamps
Lamp control	Normal

1. Enter the service mode.
2. Change data values of each test point to adjust the fan driving voltage.

Group	No.	Fan	Connection	Adjustment value
140 -	**0**	Fan - A	TP7611	**5.0 ± 0.1Vdc**
140 -	**1**	Fan - A	TP7611 (POWER(DC))	**13.2 +0 -0.1Vdc**
140 -	**2**	Fan - B	TP7612	**7.5 ± 0.1Vdc**
140 -	**3**	Fan - B	TP7612 (POWER(DC))	**13.5 +0 -0.1Vdc**
140 -	**4**	Fan - C	TP7613	**7.0 ± 0.1Vdc**
140 -	**5**	Fan - C	TP7613 (POWER(DC))	**13.2 +0 -0.1Vdc**
140 -	**6**	Fan - D1	TPFN1	**7.0 ± 0.1Vdc**
140 -	**7**	Fan - D1	TPFN1 (MAIN)	**13.5 +0 -0.1Vdc**
140 -	**8**	Fan - D2	TPFN2	**7.0 ± 0.1Vdc**
140 -	**9**	Fan - D2	TPFN2 (MAIN)	**13.5 +0 -0.1Vdc**
140 -	**10**	Fan - E	TPFN6	**5.5 ± 0.1Vdc**
140 -	**11**	Fan - E	TPFN6 (MAIN)	**13.2 +0 -0.1Vdc**

Note :

Group Fans A: FN901, FN902, FN903, FN904
Group Fans B: FN905, FN906
Group Fans C: FN908, FN909, FN912
Group Fans D1: FN910
Group Fans D2: FN911
Group Fans E: FN907

6. Auto calibration (PC)

Input mode	Computer mode
Input signal	16-step gray scale computer signal

1. Enter the service mode.
2. Select Group "**660**", No. "**0**" and set data value "**0**" to "**1**".
   The projector begins auto-calibration and then "OK" will appear on the screen.

7. Auto calibration (Composite)

Input mode	Video mode (Composite)
Input signal	100% color bar composite video signal

1. Enter the service mode.
2. Select Group "**660**", No. "**0**" and set data value "**0**" to "**1**".
   The projector begins auto-calibration and then "OK" will appear on the screen.

8. Auto calibration (Component)

Input mode	Video mode (Component)
Input signal	100% color bar component video signal (480i)

1. Enter the service mode.
2. Select Group "**660**", No. "**0**" and set data value "**0**" to "**1**".
   The projector begins auto-calibration and then "OK" will appear on the screen.

Adjustments item no. [6] to [8] are carried out at the spare parts shipment in the factory, therefore they are not required when the main board is replaced with new one.

9. Common center adjustment

Input mode Computer mode
Input signal 50% (R,G,B) pattern signal

1. Enter the service mode.
2. Project only one color component to the screen. Select Group "**900**", No. "**1**" and then change data value from "**2**" to "**0**".
3. Change data value to obtain **the minimum flicker** for each color on screen.

Group	No.	Screen
280 -	**9**	**Only green color picture**
280 -	**10**	**Only blue color picture**
280 -	**11**	**Only red color picture**

4. Select Group "**900**", No. "**1**" and then change data value from "**0**" to "**2**".

10. Gamma shipment adjustment

Software PROJECTOR SERVICE TOOL v4.20

Use the software to obtain the proper gray scale. See the further information of the software instruction manual.

11. Color Shading Correction adjustment

Software PROJECTOR SERVICE TOOL v4.20

Use the software to correct the color shading of the screen. See the further information of the software instruction manual.
The color shading correction adjustment for this model should be performed with the whole-gray patterns specified as below.

8-input patterns:
5% gray, 10% gray, 15% gray, 20% gray,
30% gray, 50% gray, 60% gray, 80% gray

12. White balance adjustment

1. Enter the service mode. (Input signal is not required.)
2. Select Group and No. of white balance adjustment items referring to the table below. For example, when adjusting the white balance in the Standard PC mode with Advanced color : Auto, select Group - No. "982 - 1 (X value)" or "982 - 2 (Y value)".
3. Change the Data value.
4. Select Group "**982**", No. "**64**". When the data value is changed "**0**" to "**10**", the adjustment is performed automatically. The displayed adjustment Group -No. changes to "930 - 0" and it takes for 2-3 minutes to complete the adjustment.
5. Check proper white balance and gray scale are obtained in the selected input mode.

❇ This white balance adjustment can be done in each lamp mode of "2 lamps", "Lamp 1" and "Lamp 2".

Group-No.	Advanced color mode: Input Adjustment Mode (X, Y)	Data (Initial value)
982 - 1	Advanced color-Auto: PC Standard -X	310
982 - 2	Advanced color-Auto: PC Standard -Y	330
982 - 9	Advanced color-Auto: PC Real -X	315
982 - 10	Advanced color-Auto: PC Real -Y	340
982 - 17	Advanced color-Auto: AV Standard -X	310
982 - 18	Advanced color-Auto: AV Standard -Y	330
982 - 25	Advanced color-Auto: AV Cinema -X	315
982 - 26	Advanced color-Auto: AV Cinema -Y	328
982 - 33	Advanced color-Off: PC Standard -X	287
982 - 34	Advanced color-Off: PC Standard -Y	317
982 - 41	Advanced color-Off: PC Real -X	292
982 - 42	Advanced color-Off: PC Real -Y	323
982 - 49	Advanced color-Off: AV Standard -X	287
982 - 50	Advanced color-Off: AV Standard -Y	317
982 - 57	Advanced color-Off: AV Cinema -X	313
982 - 58	Advanced color-Off: AV Cinema -Y	329

13. Wind Sensor calibration

1. Enter the service mode.
2. Select group no. “**170**” and item no. “**4**”. Confirm the Data value is “**1**”.
   0: Wind sensor function Disable
   1: Wind sensor function Enable
3. Select group no. “**170**” and item no. “**0**”.
4. To start the adjustment, change data value from “**0**” to “**1**”. After the auto-calibration completed, "OK" will appear on the screen.

IMPORTANT
Before taking this adjustment, you need to replace the air filter with new one or scroll up the filter sheet and make sure the cabinet top, filter cover and filter cartridge are securely installed.

Test Points and Locations

MAIN BOARD

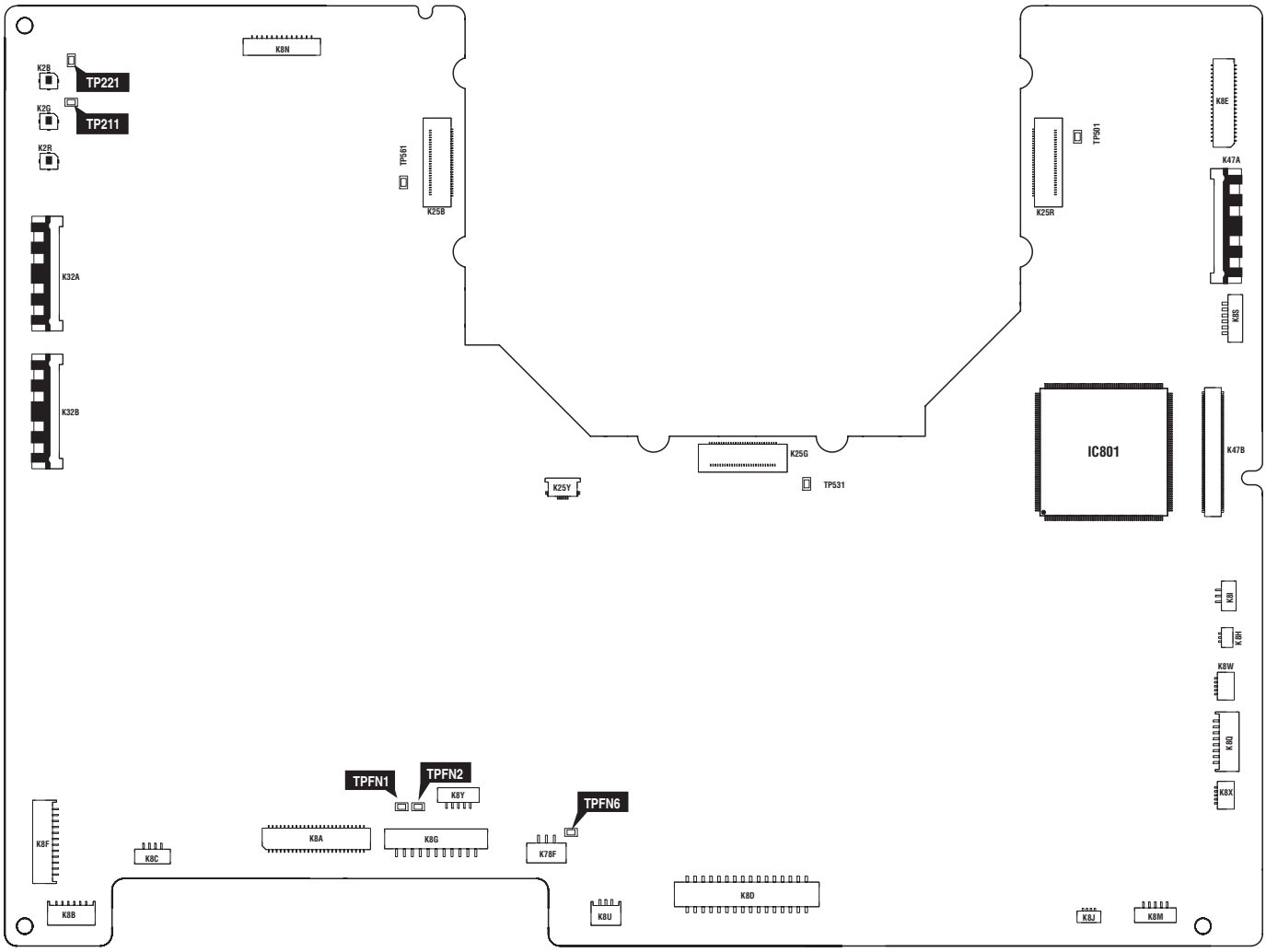

POWER BOARD

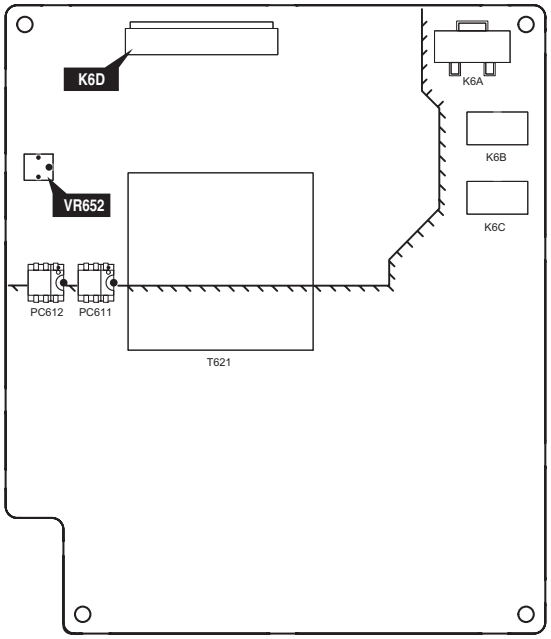

POWER(DC) BOARD

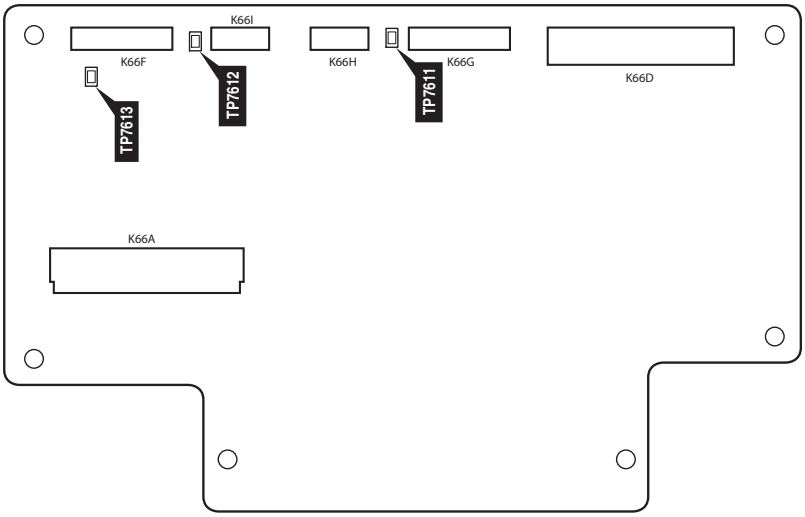

Service Adjustment Data Table

These initial values are the reference data written from the CPU ROM to memory IC when replaced new memory IC. The adjustment items indicated with "*" are required to readjust following to the "Electrical adjustments". Other items should be used with the initial data value.

GROUP	NO.	ITEM	FUNCTION	RANGE	INITIAL VALUE	NOTE
0		Temperature Monitor Indication				
	0	MCP9801 Duct (Temp) Monitor (°C)	Temp. Sensor (Intake) x 10	–	–	
	1	MCP9801 Inner (Temp) Monitor (°C)	Temp. Sensor (Inner) x 10	–	–	
	2	Thermistor Monitor (°C)	Temp. Thermistor (Inner) x 10	–	–	
	3	Thermistor Monitor	DAC value	–	–	
1		Pressure Monitor Indication				
	0	Pressure Monitor	Pressure (Compensation No) DAC	–	–	
	1	Pressure Monitor	Pressure (Compensation Yes) DAC	–	–	
	2	Pressure Monitor	Pressure (Compensation Yes) [mmHg]			
	3	Pressure Monitor	Pressure (Compensation Yes) [hpa]	–	–	
4		Flow Sensor Monitor (Read only)				
	0	Flow Sensor Monitor	Flow Sensor	–	–	
10		RS232C Set				
	0	Baud rate	RS232C Baud rate (0 : 19200 / 1 : 9600)	0 / 1	0	
11		PJ-Net Set				
	0	Reset Disable	PJ-Net Reset (0 : Enable / 1 : Disable)	0 / 1	0	
20		Logo On/Off				
	0	Logo On/Off	(0 : Menu Operation / 1 : Prohibition)	0 / 1	0	
30		Color Shading / Gamma Correction				
	0	Color shading Correction On/Off	(0 : Off / 1 : On) Not memorized	0 / 1	1	
	1	Gamma Correction On/Off	(0 : Off / 1 : On) Not Memorized	0 / 1	1	
40		Dimmer Control				
	0	Dimmer On/Off	(0 : Menu Operation / 1 : Off)	0 / 1	1 (Shipment:0)	
	1	Dimmer Level LAMP1	(0 : 264W ~ 15 : 330W)	0 ~ 15	15	
	2	Dimmer Level LAMP2	(0 : 264W ~ 15 : 330W)	0 ~ 15	15	
50		Auto Picture Control				
	0	Auto Picture On/Off	(0 : Menu Operation / 1 : Off)	0 / 1	1 (Shipment:0)	
91		Projector Error Logs History				
	0	Warning_Log_1	Latest Error Log	0 ~ 32767	0	
	~	:		:	:	
	49	Warning_Log_50	50th older Error Log	0 ~ 32767	0	
	50	Warning_Log_Reset	Resets the logs when the value is set to 10.	0 ~ 10	0	
100		Shutter Operation				
	0	PRE_MOTION	Pre-Motion Enable (0: Enable, 1: Disable)	0 ~ 1	1 (Shipment:0)	
	1	CMP_TRM	Chattering Detection Time	0 ~ 65535	7000	
	2	OUT_DLY_TRM	Output Time	0 ~ 65535	15000	
	3	CMP_CHK_CNT	Detection Count	0 ~ 15	5	
	4	OPEN_DLY	Open Delay Time	0 ~ 63	0	
	5	CLOSE_DLY	Close Delay Time	0 ~ 63	0	
113		Lamp Reset Counter				
	0	Lamp 1	Lamp 1 Total Reset Count	0 ~ 127	0	
	1	Lamp 2	Lamp 2 Total Reset Count	0 ~ 127	0	
115		Lamp Go Out				
	0	Lamp Go Out	0 : Disable / 1 : Enable	0 / 1	0	
116		Lamp Replace Display				
	0	Lamp Replace Display	0 : Disable / 1 : Enable	0 / 1	1	
117		Lamp Life Test				
	0	Lamp Life Test Enable	0: Disable / 1: Enable For safety test		0	
	1	Lamp Om time			1	
	2	Lamp Off time			3	
	3	Lamp Total time			0	
118		Half Lamp Auto Change				
	0	Half Lamp Auto Change ON/OFF	0: Off, 1: On	0 / 1	0	
	1	Half Lamp Timer Start	unit: hour	0 ~ 24	0	
	2	Half Lamp Timer Interval	unit: hour	1 ~ 255	24	
	3	Half Lamp Timer Count	unit: hour	-	-	
	4	Half Lamp Auto CHange Store	0: Clear after AC Off, 1: Not Clear after AC Off	0 / 1	0	

GROUP	NO.	ITEM	FUNCTION	RANGE	INITIAL VALUE	NOTE
130		75 ohm Terminate / Analog filter				
	0	TERM_1	(1) 75 ohm terminate On / Off (0: Off, 1: On) (2) Analog filter On/Off (0: Off, 1: On) on Input board side	0 / 1	0	
	1	TEMR_2	Analog filter On/Off (0: Off, 1: On) on Main Board side	0 / 1	0	
131		DVI Equalizer Boost Setting				
	0	CH0 Boost Data		0 ~ 7	2	
	1	CH1 Boost Data		0 ~ 7	2	
	2	CH2 Boost Data		0 ~ 7	2	
140		Fan Output Level				* Fan Driving Voltage Adj.
	0	Fan A Min		0 ~ 255	210	
	1	Fan A Max		0 ~ 255	48	
	2	Fan B Min		0 ~ 255	159	
	3	Fan B Max		0 ~ 255	36	
	4	Fan C Min		0 ~ 255	169	
	5	Fan C Max		0 ~ 255	48	
	6	Fan D1 Min		0 ~ 255	196	
	7	Fan D1 Max		0 ~ 255	34	
	8	Fan D2 Min		0 ~ 255	193	
	9	Fan D2 Max		0 ~ 255	31	
	10	Fan E Min		0 ~ 255	218	
	11	Fan E Max		0 ~ 255	38	
141		Fan Option				
	0	Fan Output Level	0 : Max / 1: Factory / 2 : Auto / 3 : Min / 99: Menu	0 ~ 3, 99	1 (Shipment:99)	
	1	Fan Cooling Mode	0: Default, 1: FAN_C _MAX Fixed	0 ~ 1	0	
160		Pressure Sensor Calibration				
	0	Press Offset		-1023 ~ 1023	0	
	1	Press Calib Effective Diff		0 ~ 1023	120	
	2	Press Sensor Calibration Error Log	0: Executed OK 10: Out of Range at Minmum 20: Out of Range at Maxmum 99: Calibration Not Executed	-	99	
170		Flow Sensor				
	0	Flow Sensor Calibration	Flow Sensor Offset Calibration Execute auto-calibration when the value is set to 1	0 ~ 1	0	* Filter Calibration Adj.
	1	Flow Sensor Offset Minimum	Flow Sensor Minimum Offset Value	0 ~ 1023	0	
	2	Flow Sensor Offset Maximum	Flow Sensor Maximum Offset Value	0 ~ 1023	0	
	3	Flow Sensor Calibration Error Log	Auto-calibration Error Log 0: No Error 10: Unstabled at Minimum 11: Out of Range at Minimum 20: Unstabled at Maximum 21: Out of Range at Maximum	-	-	
	4	Clog Check Enable	Clogged Detection with Flow Sensor 0: Disable, 1: Enable	0 ~ 1	0 (Shipment: 1)	
171		Flow Sensor				
	0	Ideal Flow Data	Read only		-	
	1	Flow Difference Data	Read only		-	
	2	Clog Detect Flow Difference Data	Read only		-	
	3	Warn Detect Flow Difference Data	Read only		-	
	4	Press Add Data	Read only		-	
	5	Filter Scroll Timer	(Filter used time) Read only		-	
175		Filter				
	0	Take up Bend	Remove the filter bending	0 ~ 1	0	
	1	Take up Bend	Remove the filter bending	0 ~ 1	0	
	2	Take up Times	Filter Scroll Remaining Times (Read only)		9	
	3	Take up Time Reset	Reset the Filter Scroll Times Reset when the value reaches 10	0 ~ 10	0	
	4	Scroll Counter Reset Time	Reset Times of Scroll Counter	0 ~ 255	0	
176		Filter Display				
	0	Filter Icon display	0 : disable / 1 : Enable	0 / 1	1	
177		Filter Timer Reset				
	0	Filter Counter Reset Times	User Menu Filter Counter Reset Times	0 ~ 255	0	
180		DDC Setting				
	0	HDCP EDID Data Setting	0 : EDID Data for DVI / 1 : EDID Data for HDCP	0 / 1	1	
	1	DDC Data Automatic Renewal	0 : Enable / 1 : Disable	0 / 1	0	
190		Panel Life Test Pattern Display				
	0	Panel Life Test Pattern	0 : White 73% Raster Step Pattern Display / 1 : Normal	0 / 1	1	
280		CXA7007				
	0	G SIG Center		0 ~ 63	32	
	1	B SIG Center		0 ~ 63	32	

GROUP	NO.	ITEM	FUNCTION	RANGE	INITIAL VALUE	NOTE
	2	R SIG Center		0 ~ 63	32	
	3	G Gain Control		0 ~ 255	194	
	4	B Gain Control		0 ~ 255	194	
	5	R Gain Control		0 ~ 255	194	
	6	G Bright Control		0 ~ 255	0	
	7	B Bright Control		0 ~ 255	0	
	8	R Bright Control		0 ~ 255	0	
	9	G VCOM Control		0 ~ 255	108	* Common Center Adj. (G)
	10	B VCOM Control		0 ~ 255	108	* Common Center Adj. (B)
	11	R VCOM Control		0 ~ 255	104	* Common Center Adj. (R)
	12	G SID Control A		0 ~ 255	16	
	13	B SID Control A		0 ~ 255	16	
	14	R SID Control A		0 ~ 255	16	
	15	G SID Control B		0 ~ 255	154	
	16	B SID Control B		0 ~ 255	154	
	17	R SID Control B		0 ~ 255	154	
	18	G FRINV		0 ~ 1	0	
	19	B FRINV		0 ~ 1	0	
	20	R FRINV		0 ~ 1	0	
290		Panel-LR				* LCD Panel L/R Setting
	0	Panel Type _LR	Read only 0 : Type - L / 20 : Type - R	0 / 20	0	
	1	Panel Type L/R _Change	Select Panel type L / R and Gamma Data Initialize Set 0: Type-L, Set 20: Type-R	0 ~ 20	10	
300		CXD3815 - On Board				
	0					
	1					
	2	CVBS Y Level	CVBS / Y Input Gain Adjustment (Composite / S-VIDEO)	0 – 255	210	* AV Video Signal Adj.(Y)
	3	CVBS C Level	C Input Gain Adjustment (Composite / S-VIDEO)	0 – 255	140	* AV Video Signal Adj.(C)
	4	Sub Hue	Tint Adjustment CVBS / S Input	0 – 63	32	
	5	HS Slice Level	H Sync Slice Level	0 – 15	4	
	6	HS Slice offset	H Sync Slice Level Offset	0 – 15	5	
	7	VS Slice Level	V Sync Slice Level	0 – 15	6	
	8	VS Slice offset	V Sync Slice Level Offset	0 – 15	6	
	9	Sampling Phase	AD Clock	0 – 63	0	
	10	Pre Shoot Level	Sub Sharpness (Common value of CVBS/S-VIDEO)	0 – 15	8	
	11	Over Shoot Level	Sub Sharpness (Common value of CVBS/S-VIDEO)	0 – 15	8	
	12	Y Filter	Setting Y Filter (Common value of CVBS/S-VIDEO)	0 ~ 7	5	
	13	C Filter	Setting C Filter (Common value of CVBS/S-VIDEO)	0 ~ 7	5	
	14	NTSC / PAL Detect	Setting NTSC / PAL Detect 1 : 96H / 1V 2 : 128H / 1V 3 : 160H / 1V - PAL Detect (Low)	0 ~ 3	1	
301		CXA2239 - Option				
	0	OUT_GainR		0 ~ 255	7	
	1	OUT_GainG		0 ~ 255	7	
	2	OUT_GainB		0 ~ 255	7	
302		Fine FPGA-Setting				
	0	UV DLT		0 ~ 31	3	
	1	UV Gain		0 ~ 2047	1030	
	2	UV SFT		0 ~ 32767	6180	
	3	Demo ON/Off	1: Display, 0: Off	0 ~ 1	0	
	4	Demo Mode	0: Demo0, 1: Demo1	0 ~ 1	0	
	5	Area Big Chg		0 ~ 4095	67	
	6	Area Small Chg		0 ~ 4095	67	
	7	Area Chg Sens		0 ~ 4095	150	
	8	Show Mode		0 ~ 3	0	
	9	PW Mute	PW Mute 0: Disable, 1: Enable	0 ~ 1	0	
303		FINE FPGA - Color Management				
	0	Y Range		0 ~ 32	8	
	1	Hue Range		0 ~ 20	10	
	2	Gain Range		0 ~ 50	30	
	3	Gm_Min Slope		0 ~ 10	3	
	4	GM_Max Slope		10 ~ 30	18	
	5	GM_Converge		1 ~ 5	3	
	6	–		–	–	
	7	–		–	–	
	8	COLM_GET_KIND_Y_ud		1 ~ 9	9	
	9	–		–	–	
	10	–		–	–	
	11	Same Hue		1 ~ 10	3	
	12	Cut_UV Norm		0 ~ 64	5	
	13	Cur_Min Y		0 ~ 127	0	
	14	Cur_Max Y		128 ~ 255	255	
	15	Same Y		0 ~ 63	24	
	16	Conv Y		0 ~ 127	64	
	17	WB Limit 0		0 ~ 255	4	

GROUP	NO.	ITEM	FUNCTION	RANGE	INITIAL VALUE		NOTE
	18	WB Limit 1		0 ~ 255	40		
	19	WB Limit 2		0 ~ 255	41		
	20	WB Limit 3		0 ~ 255	41		
	21	WB Limit 4		0 ~ 255	41		
	22	WB Limit 8		0 ~ 255	41		
	23	WB Limit In		0 ~ 255	14		
	24	WB Limit Out		0 ~ 255	20		
	25	WB Limit PtFlg		0 ~ 1	1		
	26	Fine FPGA Thru Mode		0 ~ 1	1 (Shipment:0)		
304		Fine FPGA-Ye			TYPE-L	TYPE-R	
	0	DEC_R		0 ~ 255	170	150	
	1	DEC_G		0 ~ 255	10	30	
	2	B_RATIO		0 ~ 255	15	15	
	3	SAT_SLOPE		0 ~ 255	71	71	
	4	R_SLOPE		0 ~ 255	70	70	
	5	G_SLOPE		0 ~ 255	77	77	
	6	LUM_MAX	PC-Standard	0 ~ 255	255	255	
	7	LUM_MAX	PC-Real	0 ~ 255	160	160	
	8	LUM_MAX	AV-Standard	0 ~ 255	160	160	
	9	LUM_MAX	AV-Cinema	0 ~ 255	160	160	
	10	LUM_MIN	PC-Standard	0 ~ 255	0	0	
	11	LUM_MIN	PC-Real	0 ~ 255	0	0	
	12	LUM_MIN	AV-Standard	0 ~ 255	0	0	
	13	LUM_MIN	AV-Cinema	0 ~ 255	0	0	
	14	YE_SENS		0 ~ 255	4		
	15	YE_TESTFLG		0 ~ 255	3		
	16	DAC_MAX		0 ~ 255	255		
	17	DAC_MIN		0 ~ 255	0		
	18	DUC_UseMin		0 ~ 255	0		
	19	YE_FIX_VAL	PC-Standard	0 ~ 255	60		
	20	YE_FIX_VAL	PC-Real	0 ~ 255	60		
	21	YE_FIX_VAL	AV-Standard	0 ~ 255	60		
	22	YE_FIX_VAL	AV-Cinema	0 ~ 255	60		
	23	DAC_RangeMax		0 ~ 255	255		
	24	DAC_RangeMin		0 ~ 255	32		
	25	P_PWM_WIDTH		0 ~ 255	376		
	26	DAC_LEVEL		0 ~ 255	255		
	27	YE_APLUsed		0 ~ 255	20		
	28	YE_APLOff		0 ~ 255	0		
	29	YE_FIX_VAL_SW	PC-Standard	0 ~ 1	1		
	30	YE_FIX_VAL_SW	PC-Real	0 ~ 1	1		
	31	YE_FIX_VAL_SW	AV-Standard	0 ~ 1	1		
	32	YE_FIX_VAL_SW	AV-Cinema	0 ~ 1	1		
	33	YE_APL_A0		0 ~ 127	30		
	34	YE_APL_A1		0 ~ 127	62		
	35	YE_APL_A2		0 ~ 127	75		
	36	YE_APL_A3		0 ~ 127	90		
	37	YE_APL_A4		0 ~ 127	100		
	38	YE_GAIN_A0		-256 ~ 255	-20		
	39	YE_GAIN_A1		-256 ~ 255	-12		
	40	YE_GAIN_A2		-256 ~ 255	-4		
	41	YE_GAIN_A3		-256 ~ 255	13		
	42	YE_GAIN_A4		-256 ~ 255	30		
	43	YE_APL_B0		0 ~ 127	8		
	44	YE_APL_B1		0 ~ 127	19		
	45	YE_APL_B2		0 ~ 127	30		
	46	YE_APL_B3		0 ~ 127	38		
	47	YE_APL_B4		0 ~ 127	45		
	48	YE_GAIN_B0		-256 ~ 255	20		
	49	YE_GAIN_B1		-256 ~ 255	26		
	50	YE_GAIN_B2		-256 ~ 255	43		
	51	YE_GAIN_B3		-256 ~ 255	70		
	52	YE_GAIN_B4		-256 ~ 255	100		
	53	YE_APL_C0		0 ~ 127	7		
	54	YE_APL_C1		0 ~ 127	25		
	55	YE_APL_C2		0 ~ 127	40		
	56	YE_APL_C3		0 ~ 127	50		
	57	YE_APL_C4		0 ~ 127	60		
	58	YE_EXP_C0		0 ~ 511	300		
	59	YE_EXP_C1		0 ~ 511	278		
	60	YE_EXP_C2		0 ~ 511	207		
	61	YE_EXP_C3		0 ~ 511	120		
	62	YE_EXP_C4		0 ~ 511	100		
	63	YEOFF_YE_SW	Data Select at Ye Off 0: Off, 1: Dac	0 ~ 1	1		
	64	YEOFF_YE_LVL		0 ~ 255	255		
305		Fine FPGA Sharpness					
	0	Sharpness MIN	PC-SD	0 ~ 127	0		
	1	Sharpness MIN	PC-HD	0 ~ 127	17		
	2	Sharpness MIN	AV-SD	0 ~ 127	0		
	3	Sharpness MIN	AV-HD	0 ~ 127	7		

GROUP	NO.	ITEM	FUNCTION	RANGE	INITIAL VALUE	NOTE
	4	Sharpness CENTER	PC-SD	0 ~ 127	40	
	5	Sharpness CENTER	PC-HD	0 ~ 127	39	
	6	Sharpness CENTER	AV-SD	0 ~ 127	46	
	7	Sharpness CENTER	AV-HD	0 ~ 127	51	
	8	Sharpness MAX	PC-SD	0 ~ 127	112	
	9	Sharpness MAX	PC-HD	0 ~ 127	112	
	10	Sharpness MAX	AV-SD	0 ~ 127	77	
	11	Sharpness MAX	AV-HD	0 ~ 127	100	
320		ILS51002 - Common				
	0	GREEN_OFFSET	(r12-13) RGB_Analog / Component / CVBS(S)	0 ~ 1023	512/512/512	
	1	RED_OFFSET	(r14-15) RGB_Analog / Component / CVBS(S)	0 ~ 1023	512/512/512	
	2	BLUE_OFFSET	(r16-17) RGB_Analog / Component / CVBS(S)	0 ~ 1023	512/512/512	
	3	GREEN_GAIN	(r18-19) RGB_Analog / Component / CVBS(S)	0 ~ 1023	188/188/188	
	4	RED_GAIN	(r1A-1B) RGB_Analog / Component / CVBS(S)	0 ~ 1023	188/188/188	
	5	BLUE_GAIN	(r1C-1D) RGB_Analog / Component / CVBS(S)	0 ~ 1023	188/188/188	
	6	PLL_Pre-coast	(r21)	0 ~ 255	8	
	7	PLL_Post-coast	(r22)	0 ~ 255	13	
	8	ABLC Configuration - ABLC disable	(r27)	0 ~ 1	0	
	9	ABLC Configuration - Offset DAC Range	(r27)	0 ~ 1	1	
	10	ABLC Configuration - ABLC pixel width	(r27)	0 ~ 3	1	
	11	ABLC Configuration - ABLC bandwidth	(r27)	0 ~ 7	2	
	12	AFE Band Width	(r2E)	0 ~ 15	15	
	13	DC_Couple	(r10-3)	0 ~ 1	0	
321		ILS51002 - ABLC Start Pixel				
	0	VGA1	(r24-25)	0 ~ 16383	1	
	1	VGA2	(r24-25)	0 ~ 16383	2	
	2	VGA3	(r24-25)	0 ~ 16383	1	
	3	VGA4	(r24-25)	0 ~ 16383	2	
	4	VGA5	(r24-25)	0 ~ 16383	50	
	5	VGA6	(r24-25)	0 ~ 16383	48	
	6	VGA7	(r24-25)	0 ~ 16383	20	
	7	SVGA1	(r24-25)	0 ~ 16383	50	
	8	SVGA2	(r24-25)	0 ~ 16383	1053	
	9	SVGA3	(r24-25)	0 ~ 16383	65	
	10	SVGA4	(r24-25)	0 ~ 16383	58	
	11	SVGA5	(r24-25)	0 ~ 16383	2	
	12	SVGA6	(r24-25)	0 ~ 16383	18	
	13	SVGA7	(r24-25)	0 ~ 16383	20	
	14	SVGA8	(r24-25)	0 ~ 16383	1053	
	15	SVGA9	(r24-25)	0 ~ 16383	30	
	16	SVGA10	(r24-25)	0 ~ 16383	40	
	17	SVGA11	(r24-25)	0 ~ 16383	1053	
	18	XGA1	(r24-25)	0 ~ 16383	32	
	19	XGA2	(r24-25)	0 ~ 16383	83	
	20	XGA3	(r24-25)	0 ~ 16383	65	
	21	XGA4	(r24-25)	0 ~ 16383	50	
	22	XGA5	(r24-25)	0 ~ 16383	70	
	23	XGA6	(r24-25)	0 ~ 16383	32	
	24	XGA7	(r24-25)	0 ~ 16383	66	
	25	XGA8	(r24-25)	0 ~ 16383	42	
	26	XGA9	(r24-25)	0 ~ 16383	2	
	27	XGA10	(r24-25)	0 ~ 16383	111	
	28	XGA11	(r24-25)	0 ~ 16383	32	
	29	XGA12	(r24-25)	0 ~ 16383	1258	
	30	XGA13	(r24-25)	0 ~ 16383	38	
	31	XGA14	(r24-25)	0 ~ 16383	38	
	32	XGA15	(r24-25)	0 ~ 16383	2	
	33	WXGA1	(r24-25)	0 ~ 16383	32	
	34	WXGA2	(r24-25)	0 ~ 16383	65	
	35	WXGA3	(r24-25)	0 ~ 16383	32	
	36	WXGA4	(r24-25)	0 ~ 16383	81	
	37	WXGA6	(r24-25)	0 ~ 16383	65	
	38	WXGA7	(r24-25)	0 ~ 16383	86	
	39	WXGA8	(r24-25)	0 ~ 16383	86	
	40	WXGA9	(r24-25)	0 ~ 16383	113	
	41	WXGA10	(r24-25)	0 ~ 16383	84	
	42	SXGA1	(r24-25)	0 ~ 16383	75	
	43	SXGA2	(r24-25)	0 ~ 16383	30	
	44	SXGA3	(r24-25)	0 ~ 16383	29	
	45	SXGA4	(r24-25)	0 ~ 16383	78	
	46	SXGA5	(r24-25)	0 ~ 16383	29	
	47	SXGA6	(r24-25)	0 ~ 16383	87	
	48	SXGA7	(r24-25)	0 ~ 16383	125	
	49	SXGA8	(r24-25)	0 ~ 16383	29	
	50	SXGA9	(r24-25)	0 ~ 16383	94	
	51	SXGA10	(r24-25)	0 ~ 16383	148	
	52	SXGA11	(r24-25)	0 ~ 16383	61	
	53	SXGA12	(r24-25)	0 ~ 16383	56	
	54	SXGA13	(r24-25)	0 ~ 16383	2	

GROUP	NO.	ITEM	FUNCTION	RANGE	INITIAL VALUE	NOTE
	55	SXGA14	(r24-25)	0 ~ 16383	2	
	56	SXGA15	(r24-25)	0 ~ 16383	78	
	57	SXGA16	(r24-25)	0 ~ 16383	97	
	58	SXGA17	(r24-25)	0 ~ 16383	88	
	59	SXGA18	(r24-25)	0 ~ 16383	127	
	60	SXGA19	(r24-25)	0 ~ 16383	29	
	61	SXGA20	(r24-25)	0 ~ 16383	70	
	62	SXGA21	(r24-25)	0 ~ 16383	2	
	63	SXGA+1	(r24-25)	0 ~ 16383	29	
	64	SXGA+2	(r24-25)	0 ~ 16383	93	
	65	SXGA+3	(r24-25)	0 ~ 16383	96	
	66	UXGA1	(r24-25)	0 ~ 16383	132	
	67	SXGA2	(r24-25)	0 ~ 16383	63	
	68	SXGA3	(r24-25)	0 ~ 16383	60	
	69	SXGA4	(r24-25)	0 ~ 16383	55	
	70	SXGA5	(r24-25)	0 ~ 16383	50	
	71	MAC LC 13	(r24-25)	0 ~ 16383	42	
	72	MAC II 13	(r24-25)	0 ~ 16383	31	
	73	MAC II 16	(r24-25)	0 ~ 16383	101	
	74	MAC II 19	(r24-25)	0 ~ 16383	70	
	75	MAC II 21	(r24-25)	0 ~ 16383	41	
	76	MAC II A	(r24-25)	0 ~ 16383	90	
	77	MAC II B	(r24-25)	0 ~ 16383	108	
	78	1035i60, 1080i/60	(r24-25)	0 ~ 16383	55	
	79	1080i/50	(r24-25)	0 ~ 16383	62	
	80	720p	(r24-25)	0 ~ 16383	83	
	81	575p	(r24-25)	0 ~ 16383	40	
	82	480p	(r24-25)	0 ~ 16383	20	
	83	NTSC, NTSC4.43, PAL, PAL-M, PAL-N,SECAM, PAL-60, NTSC-50, 575i, 480i	(r24-25)	0 ~ 16383	28	
	84	SXGA+4	(r24-25)	0 ~ 16383	22	
	85	SXGA+5	(r24-25)	0 ~ 16383	30	
	86	1080PSE30	(r24-25)	0 ~ 16383	55	
	87	1080PSE25	(r24-25)	0 ~ 16383	62	
	88	1080PSE24	(r24-25)	0 ~ 16383	56	
	89	WXGA11	(r24-25)	0 ~ 16383	85	
	90	WXGA+1	(r24-25)	0 ~ 16383	109	
	91	WXGA+2	(r24-25)	0 ~ 16383	180	
	92	WSXGA+1	(r24-25)	0 ~ 16383	100	
	93	WUXGA1	(r24-25)	0 ~ 16383	60	
	94	WUXGA2	(r24-25)	0 ~ 16383	16	
	95	WXGA12	(r24-25)	0 ~ 16383	20	
	96	Default	(r24-25)	0 ~ 16383	2	
322		ILS51002 - Restore Clamp Width				
	0	VGA1	(r26)	0 ~ 255	32	
	1	VGA2	(r26)	0 ~ 255	32	
	2	VGA3	(r26)	0 ~ 255	32	
	3	VGA4	(r26)	0 ~ 255	32	
	4	VGA5	(r26)	0 ~ 255	32	
	5	VGA6	(r26)	0 ~ 255	32	
	6	VGA7	(r26)	0 ~ 255	32	
	7	SVGA1	(r26)	0 ~ 255	32	
	8	SVGA2	(r26)	0 ~ 255	16	
	9	SVGA3	(r26)	0 ~ 255	32	
	10	SVGA4	(r26)	0 ~ 255	32	
	11	SVGA5	(r26)	0 ~ 255	32	
	12	SVGA6	(r26)	0 ~ 255	32	
	13	SVGA7	(r26)	0 ~ 255	32	
	14	SVGA8	(r26)	0 ~ 255	16	
	15	SVGA9	(r26)	0 ~ 255	32	
	16	SVGA10	(r26)	0 ~ 255	32	
	17	SVGA11	(r26)	0 ~ 255	16	
	18	XGA1	(r26)	0 ~ 255	32	
	19	XGA2	(r26)	0 ~ 255	32	
	20	XGA3	(r26)	0 ~ 255	32	
	21	XGA4	(r26)	0 ~ 255	32	
	22	XGA5	(r26)	0 ~ 255	32	
	23	XGA6	(r26)	0 ~ 255	32	
	24	XGA7	(r26)	0 ~ 255	32	
	25	XGA8	(r26)	0 ~ 255	32	
	26	XGA9	(r26)	0 ~ 255	32	
	27	XGA10	(r26)	0 ~ 255	32	
	28	XGA11	(r26)	0 ~ 255	32	
	29	XGA12	(r26)	0 ~ 255	32	
	30	XGA13	(r26)	0 ~ 255	32	
	31	XGA14	(r26)	0 ~ 255	32	
	32	XGA15	(r26)	0 ~ 255	32	
	33	WXGA1	(r26)	0 ~ 255	32	
	34	WXGA2	(r26)	0 ~ 255	32	
	35	WXGA3	(r26)	0 ~ 255	32	
	36	WXGA4	(r26)	0 ~ 255	32	

GROUP	NO.	ITEM	FUNCTION	RANGE	INITIAL VALUE	NOTE
	37	WXGA6	(r26)	0 ~ 255	32	
	38	WXGA7	(r26)	0 ~ 255	32	
	39	WXGA8	(r26)	0 ~ 255	32	
	40	WXGA9	(r26)	0 ~ 255	32	
	41	WXGA10	(r26)	0 ~ 255	32	
	42	SXGA1	(r26)	0 ~ 255	32	
	43	SXGA2	(r26)	0 ~ 255	32	
	44	SXGA3	(r26)	0 ~ 255	32	
	45	SXGA4	(r26)	0 ~ 255	32	
	46	SXGA5	(r26)	0 ~ 255	32	
	47	SXGA6	(r26)	0 ~ 255	32	
	48	SXGA7	(r26)	0 ~ 255	32	
	49	SXGA8	(r26)	0 ~ 255	32	
	50	SXGA9	(r26)	0 ~ 255	32	
	51	SXGA10	(r26)	0 ~ 255	32	
	52	SXGA11	(r26)	0 ~ 255	32	
	53	SXGA12	(r26)	0 ~ 255	32	
	54	SXGA13	(r26)	0 ~ 255	32	
	55	SXGA14	(r26)	0 ~ 255	32	
	56	SXGA15	(r26)	0 ~ 255	32	
	57	SXGA16	(r26)	0 ~ 255	32	
	58	SXGA17	(r26)	0 ~ 255	32	
	59	SXGA18	(r26)	0 ~ 255	32	
	60	SXGA19	(r26)	0 ~ 255	32	
	61	SXGA20	(r26)	0 ~ 255	32	
	62	SXGA21	(r26)	0 ~ 255	32	
	63	SXGA+1	(r26)	0 ~ 255	32	
	64	SXGA+2	(r26)	0 ~ 255	32	
	65	SXGA+3	(r26)	0 ~ 255	32	
	66	UXGA1	(r26)	0 ~ 255	32	
	67	UXGA2	(r26)	0 ~ 255	32	
	68	UXGA3	(r26)	0 ~ 255	32	
	69	UXGA4	(r26)	0 ~ 255	32	
	70	UXGA5	(r26)	0 ~ 255	32	
	71	MAC LC 13	(r26)	0 ~ 255	32	
	72	MAC II 13	(r26)	0 ~ 255	32	
	73	MAC II 16	(r26))	0 ~ 255	32	
	74	MAC II 19	(r26)	0 ~ 255	32	
	75	MAC II 21	(r26)	0 ~ 255	32	
	76	MAC II A	(r26)	0 ~ 255	32	
	77	MAC II B	(r26)	0 ~ 255	32	
	78	1035i/60, 1080i/60	(r26)	0 ~ 255	32	
	79	1080i/50	(r26)	0 ~ 255	32	
	80		(r26)	0 ~ 255	32	
	81	575p	(r26)	0 ~ 255	32	
	82	480p	(r26)	0 ~ 255	32	
	83	NTSC, NTSC4.43, PAL, PAL-M, PAL-N,SECAM, PAL-60, NTSC-50, 575i, 480i	(r26)	0 ~ 255	32	
	84	SXGA+4	(r26)	0 ~ 255	32	
	85	SXGA+5	(r26)	0 ~ 255	32	
	86	1080PSE30	(r26)	0 ~ 255	32	
	87	1080PSE25	(r26)	0 ~ 255	32	
	88	1080PSE24	(r26)	0 ~ 255	32	
	89	WXGA11	(r26)	0 ~ 255	32	
	90	WXGA+1	(r26)	0 ~ 255	32	
	91	WXGA+2	(r26)	0 ~ 255	32	
	92	WSXGA+1	(r26)	0 ~ 255	32	
	93	WUXGA1	(r26)	0 ~ 255	32	
	94	WUXGA2	(r26)	0 ~ 255	32	
	95	WXGA12	(r26)	0 ~ 255	32	
	96	Default	(r26)	0 ~ 255	32	
324		ILS51002 - MISC CTRL				
	0	FBC OUTPUT SOURCE	01b : FBC out Terminal Output	0 ~ 1	0	
330		MOTHER FPGA				
	0	DELAY TIME [SLOT1] MTHE	Setting Digital signal and Clock 40MHz Over	-64 ~ 63	-18	
	1	DELAY TIME [SLOT1] MAIN	Setting Digital signal and Clock 40MHz Over	-64 ~ 63	-32	
	2	DELAY TIME [SLOT2] MTHE	Setting Digital signal and Clock 40MHz Over	-64 ~ 63	0	
	3	DELAY TIME [SLOT2] MAIN	Setting Digital signal and Clock 40MHz Over	-64 ~ 63	0	
	4	DELAY TIME [SLOT3] MTHE	Setting Digital signal and Clock 40MHz Over	-64 ~ 63	-9	
	5	DELAY TIME [SLOT3] MAIN	Setting Digital signal and Clock 40MHz Over	-64 ~ 63	-22	
	6	DELAY TIME [SLOT4] MTHE	Setting Digital signal and Clock 40MHz Over	-64 ~ 63	-15	
	7	DELAY TIME [SLOT4] MAIN	Setting Digital signal and Clock 40MHz Over	-64 ~ 63	-28	
382		SW FPGA - SETTING				
	0	CNTDN VON		0 ~ 1	0	
	1	FB HS GATE ON		0 ~ 1	0	
	2	MANUAL COAST ST		0 ~ 255	4	
	3	MANUAL COAST ED		0 ~ 255	4	
	4	MANUAL ON		0 ~ 1	0	

GROUP	NO.	ITEM	FUNCTION	RANGE	INITIAL VALUE	NOTE
	5	UVDLT		0 ~ 15	3	
383		SW FPGA - VGATE				
	0	VAGTE REASET CNT		0 ~ 255	100	
	1	VAGTE WIDTH		0 ~ 255	12	
	2	VAGTE AND LINE		0 ~ 255	0	
384		SW FPGA - COAST				
	0	COAST ON		0 ~ 1	0	
385		SW FPGA - TEST				
	0	TEST HGATE		0 ~ 1	0	
386		SW FPGA - Clamp Level	r00 ~ r03			
	0	DAT_CLP_RLVLE		0 ~ 1023	16	
	1	DAT_CLP_GLVLE		0 ~ 1023	16	
	2	DAT_CLP_BLVLE		0 ~ 1023	16	
387		SW FPGA - OFFSET	r21 ~ r23			
	0	R_OFFSET		0 ~ 255	240	
	1	G_OFFSET		0 ~ 255	240	
	2	B_OFFSET		0 ~ 255	240	
388		FPGA NIOS - Image RGB Table				
	0	IMAGE_RGB_TBL		0 ~ 7	0	
400		SCART (480i)	[DVI - Dsub Card]			
	0	Total Dots		0 ~ 3000	1292	
	1	Disp Dots		0 ~ 3000	1024	
	2	H Back Porch		0 ~ 3000	191	
	3	V Back Porch		0 ~ 3000	42	
	4	Disp Line		0 ~ 1500	468	
	8	VSBEG		0 ~ 15	2	
	9	Filed Enable		0 ~ 1	1	
	10	FLDBEG		0 ~ 15	7	
	11	FLDEND		0 ~ 15	13	
401		SCART (575i)	[DVI - Dsub Card]			
	0	Total Dots		0 ~ 3000	1322	
	1	Disp Dots		0 ~ 3000	1024	
	2	H Back Porch		0 ~ 3000	220	
	3	V Back Porch		0 ~ 3000	57	
	4	Disp Line		0 ~ 1500	552	
	8	VSBEG		0 ~ 15	2	
	9	Filed Enable		0 ~ 1	1	
	10	FLDBEG		0 ~ 15	7	
	11	FLDEND		0 ~ 15	13	
410		RGB Video (480i)	[DVI - Dsub Card]			
	0	Total Dots		0 ~ 3000	1292	
	1	Disp Dots		0 ~ 3000	1024	
	2	H Back Porch		0 ~ 3000	190	
	3	V Back Porch		0 ~ 3000	42	
	4	Disp Line		0 ~ 1500	468	
	8	VSBEG		0 ~ 15	1	
	9	Filed Enable		0 ~ 1	1	
	10	FLDBEG		0 ~ 15	1	
	11	FLDEND		0 ~ 15	9	
411		RGB Video (575i)	[DVI - Dsub Card]			
	0	Total Dots		0 ~ 3000	1322	
	1	Disp Dots		0 ~ 3000	1024	
	2	H Back Porch		0 ~ 3000	217	
	3	V Back Porch		0 ~ 3000	56	
	4	Disp Line		0 ~ 1500	552	
	8	VSBEG		0 ~ 15	1	
	9	Filed Enable		0 ~ 1	1	
	10	FLDBEG		0 ~ 15	1	
	11	FLDEND		0 ~ 15	9	
412		RGB Video (480P)	[DVI - Dsub Card]			
	0	Total Dots		0 ~ 3000	1245	
	1	Disp Dots		0 ~ 3000	1024	
	2	H Back Porch		0 ~ 3000	168	
	3	V Back Porch		0 ~ 3000	39	
	4	Disp Line		0 ~ 1500	476	
	8	VSBEG		0 ~ 15	2	
	9	Filed Enable		0 ~ 1	0	
	10	FLDBEG		0 ~ 15	0	
	11	FLDEND		0 ~ 15	0	

GROUP	NO.	ITEM	FUNCTION	RANGE	INITIAL VALUE	NOTE
413		RGB Video (575P)	[DVI - Dsub Card]			
	0	Total Dots		0 ~ 3000	1278	
	1	Disp Dots		0 ~ 3000	1024	
	2	H Back Porch		0 ~ 3000	199	
	3	V Back Porch		0 ~ 3000	49	
	4	Disp Line		0 ~ 1500	550	
	8	VSBEG		0 ~ 15	2	
	9	Filed Enable		0 ~ 1	0	
	10	FLDBEG		0 ~ 15	0	
	11	FLDEND		0 ~ 15	0	
414		RGB Video (720P - 60)	[DVI - Dsub Card]			
	0	Total Dots		0 ~ 3000	1650	
	1	Disp Dots		0 ~ 3000	1270	
	2	H Back Porch		0 ~ 3000	284	
	3	V Back Porch		0 ~ 3000	26	
	4	Disp Line		0 ~ 1500	719	
	8	VSBEG		0 ~ 15	2	
	9	Filed Enable		0 ~ 1	0	
	10	FLDBEG		0 ~ 15	0	
	11	FLDEND		0 ~ 15	0	
415		RGB Video (720P - 50)	[DVI - Dsub Card]			
	0	Total Dots		0 ~ 3000	1980	
	1	Disp Dots		0 ~ 3000	1270	
	2	H Back Porch		0 ~ 3000	280	
	3	V Back Porch		0 ~ 3000	27	
	4	Disp Line		0 ~ 1500	719	
	8	VSBEG		0 ~ 15	2	
	9	Filed Enable		0 ~ 1	0	
	10	FLDBEG		0 ~ 15	0	
	11	FLDEND		0 ~ 15	0	
416		RGB Video (1080i - 60)	[DVI - Dsub Card]			
	0	Total Dots		0 ~ 3000	2200	
	1	Disp Dots		0 ~ 3000	1910	
	2	H Back Porch		0 ~ 3000	219	
	3	V Back Porch		0 ~ 3000	40	
	4	Disp Line		0 ~ 1500	1080	
	8	VSBEG		0 ~ 15	1	
	9	Filed Enable		0 ~ 1	1	
	10	FLDBEG		0 ~ 15	2	
	11	FLDEND		0 ~ 15	9	
417		RGB Video (1035i)	[DVI - Dsub Card]			
	0	Total Dots		0 ~ 3000	2200	
	1	Disp Dots		0 ~ 3000	1850	
	2	H Back Porch		0 ~ 3000	247	
	3	V Back Porch		0 ~ 3000	92	
	4	Disp Line		0 ~ 1500	1010	
	8	VSBEG		0 ~ 15	1	
	9	Filed Enable		0 ~ 1	1	
	10	FLDBEG		0 ~ 15	2	
	11	FLDEND		0 ~ 15	9	
418		RGB Video (1080i - 50)	[DVI - Dsub Card]			
	0	Total Dots		0 ~ 3000	2640	
	1	Disp Dots		0 ~ 3000	1914	
	2	H Back Porch		0 ~ 3000	218	
	3	V Back Porch		0 ~ 3000	40	
	4	Disp Line		0 ~ 1500	1082	
	8	VSBEG		0 ~ 15	1	
	9	Filed Enable		0 ~ 1	1	
	10	FLDBEG		0 ~ 15	2	
	11	FLDEND		0 ~ 15	9	
419		RGB Video (1080P - 60)	[DVI - Dsub Card]			
	0	Total Dots		0 ~ 3000	1565	
	1	Disp Dots		0 ~ 3000	1362	
	2	H Back Porch		0 ~ 3000	160	
	3	V Back Porch		0 ~ 3000	41	
	4	Disp Line		0 ~ 1500	1080	
	8	VSBEG		0 ~ 15	2	
	9	Filed Enable		0 ~ 1	0	
	10	FLDBEG		0 ~ 15	0	
	11	FLDEND		0 ~ 15	0	
420		RGB Video (1080P - 50)	[DVI - Dsub Card]			
	0	Total Dots		0 ~ 3000	1878	
	1	Disp Dots		0 ~ 3000	1362	
	2	H Back Porch		0 ~ 3000	160	
	3	V Back Porch		0 ~ 3000	41	

GROUP	NO.	ITEM	FUNCTION	RANGE	INITIAL VALUE	NOTE
	4	Disp Line		0 ~ 1500	1080	
	8	VSBEG		0 ~ 15	2	
	9	Filed Enable		0 ~ 1	0	
	10	FLDBEG		0 ~ 15	0	
	11	FLDEND		0 ~ 15	0	
422		RGB Video (1080P - 30)	[DVI - Dsub Card]			
	0	Total Dots		0 ~ 3000	1565	
	1	Disp Dots		0 ~ 3000	1362	
	2	H Back Porch		0 ~ 3000	160	
	3	V Back Porch		0 ~ 3000	41	
	4	Disp Line		0 ~ 1500	1080	
	8	VSBEG		0 ~ 15	2	
	9	Filed Enable		0 ~ 1	0	
	10	FLDBEG		0 ~ 15	0	
	11	FLDEND		0 ~ 15	0	
423		RGB Video (1080P - 25)	[DVI - Dsub Card]			
	0	Total Dots		0 ~ 3000	1878	
	1	Disp Dots		0 ~ 3000	1362	
	2	H Back Porch		0 ~ 3000	160	
	3	V Back Porch		0 ~ 3000	41	
	4	Disp Line		0 ~ 1500	1080	
	8	VSBEG		0 ~ 15	2	
	9	Filed Enable		0 ~ 1	0	
	10	FLDBEG		0 ~ 15	0	
	11	FLDEND		0 ~ 15	0	
424		RGB Video (1080P- 48)	[DVI - Dsub Card]			
	0	Total Dots		0 ~ 3000	1957	
	1	Disp Dots		0 ~ 3000	1362	
	2	H Back Porch		0 ~ 3000	160	
	3	V Back Porch		0 ~ 3000	41	
	4	Disp Line		0 ~ 1500	1080	
	8	VSBEG		0 ~ 15	2	
	9	Filed Enable		0 ~ 1	0	
	10	FLDBEG		0 ~ 15	0	
	11	FLDEND		0 ~ 15	0	
425		RGB Video (1080 - 30psf)	[DVI - Dsub Card]			
	0	Total Dots		0 ~ 3000	2200	
	1	Disp Dots		0 ~ 3000	1910	
	2	H Back Porch		0 ~ 3000	219	
	3	V Back Porch		0 ~ 3000	40	
	4	Disp Line		0 ~ 1500	1080	
	8	VSBEG		0 ~ 15	2	
	9	Filed Enable		0 ~ 1	0	
	10	FLDBEG		0 ~ 15	0	
	11	FLDEND		0 ~ 15	0	
426		RGB Video (1080 - 25psf)	[DVI - Dsub Card]			
	0	Total Dots		0 ~ 3000	2640	
	1	Disp Dots		0 ~ 3000	1916	
	2	H Back Porch		0 ~ 3000	216	
	3	V Back Porch		0 ~ 3000	40	
	4	Disp Line		0 ~ 1500	1080	
	8	VSBEG		0 ~ 15	2	
	9	Filed Enable		0 ~ 1	0	
	10	FLDBEG		0 ~ 15	0	
	11	FLDEND		0 ~ 15	0	
427		RGB Video (1080 - 34psf)	[DVI - Dsub Card]			
	0	Total Dots		0 ~ 3000	2750	
	1	Disp Dots		0 ~ 3000	1914	
	2	H Back Porch		0 ~ 3000	216	
	3	V Back Porch		0 ~ 3000	40	
	4	Disp Line		0 ~ 1500	1080	
	8	VSBEG		0 ~ 15	2	
	9	Filed Enable		0 ~ 1	0	
	10	FLDBEG		0 ~ 15	0	
	11	FLDEND		0 ~ 15	0	
430		Composite / S Video NTSC	[5BNC - Video Card]			
	0	Total Dots		0 ~ 3000	1315	
	1	Disp Dots		0 ~ 3000	1024	
	2	H Back Porch		0 ~ 3000	194	
	3	V Back Porch		0 ~ 3000	48	
	4	Disp Line		0 ~ 1500	456	
	8	VSBEG		0 ~ 15	1	
	9	Filed Enable		0 ~ 1	1	
	10	FLDBEG		0 ~ 15	0	
	11	FLDEND		0 ~ 15	6	

GROUP	NO.	ITEM	FUNCTION	RANGE	INITIAL VALUE	NOTE
431		Composite / S Video PAL	[5BNC - Video Card]			
	0	Total Dots		0 ~ 3000	1349	
	1	Disp Dots		0 ~ 3000	1024	
	2	H Back Porch		0 ~ 3000	227	
	3	V Back Porch		0 ~ 3000	63	
	4	Disp Line		0 ~ 1500	534	
	8	VSBEG		0 ~ 15	2	
	9	Filed Enable		0 ~ 1	1	
	10	FLDBEG		0 ~ 15	7	
	11	FLDEND		0 ~ 15	13	
440		YCbCr (480i)	[5BNC - Video Card]			
	0	Total Dots		0 ~ 3000	1292	
	1	Disp Dots		0 ~ 3000	1024	
	2	H Back Porch		0 ~ 3000	199	
	3	V Back Porch		0 ~ 3000	42	
	4	Disp Line		0 ~ 1500	468	
	8	VSBEG		0 ~ 15	1	
	9	Filed Enable		0 ~ 1	1	
	10	FLDBEG		0 ~ 15	0	
	11	FLDEND		0 ~ 15	6	
441		YCbCr (575i)	[5BNC - Video Card]			
	0	Total Dots		0 ~ 3000	1322	
	1	Disp Dots		0 ~ 3000	1024	
	2	H Back Porch		0 ~ 3000	225	
	3	V Back Porch		0 ~ 3000	56	
	4	Disp Line		0 ~ 1500	552	
	8	VSBEG		0 ~ 15	1	
	9	Filed Enable		0 ~ 1	1	
	10	FLDBEG		0 ~ 15	0	
	11	FLDEND		0 ~ 15	6	
442		YCbCr (480P)	[5BNC - Video Card]			
	0	Total Dots		0 ~ 3000	1245	
	1	Disp Dots		0 ~ 3000	1024	
	2	H Back Porch		0 ~ 3000	170	
	3	V Back Porch		0 ~ 3000	38	
	4	Disp Line		0 ~ 1500	475	
	8	VSBEG		0 ~ 15	2	
	9	Filed Enable		0 ~ 1	0	
	10	FLDBEG		0 ~ 15	0	
	11	FLDEND		0 ~ 15	0	
443		YCbCr (575P)	[5BNC - Video Card]			
	0	Total Dots		0 ~ 3000	1278	
	1	Disp Dots		0 ~ 3000	1024	
	2	H Back Porch		0 ~ 3000	201	
	3	V Back Porch		0 ~ 3000	48	
	4	Disp Line		0 ~ 1500	550	
	8	VSBEG		0 ~ 15	2	
	9	Filed Enable		0 ~ 1	0	
	10	FLDBEG		0 ~ 15	0	
	11	FLDEND		0 ~ 15	0	
444		YCbCr (720P -60)	[5BNC - Video Card]			
	0	Total Dots		0 ~ 3000	1650	
	1	Disp Dots		0 ~ 3000	1270	
	2	H Back Porch		0 ~ 3000	287	
	3	V Back Porch		0 ~ 3000	25	
	4	Disp Line		0 ~ 1500	720	
	8	VSBEG		0 ~ 15	2	
	9	Filed Enable		0 ~ 1	0	
	10	FLDBEG		0 ~ 15	0	
	11	FLDEND		0 ~ 15	0	
445		YCbCr (720p -50)	[5BNC - Video Card]			
	0	Total Dots		0 ~ 3000	1980	
	1	Disp Dots		0 ~ 3000	1270	
	2	H Back Porch		0 ~ 3000	283	
	3	V Back Porch		0 ~ 3000	26	
	4	Disp Line		0 ~ 1500	719	
	8	VSBEG		0 ~ 15	2	
	9	Filed Enable		0 ~ 1	0	
	10	FLDBEG		0 ~ 15	0	
	11	FLDEND		0 ~ 15	0	
446		YCbCr (1080i -60)	[5BNC - Video Card]			
	0	Total Dots		0 ~ 3000	2200	
	1	Disp Dots		0 ~ 3000	1910	
	2	H Back Porch		0 ~ 3000	220	

GROUP	NO.	ITEM	FUNCTION	RANGE	INITIAL VALUE	NOTE
	3	V Back Porch		0 ~ 3000	38	
	4	Disp Line		0 ~ 1500	1082	
	8	VSBEG		0 ~ 15	2	
	9	Filed Enable		0 ~ 1	1	
	10	FLDBEG		0 ~ 15	3	
	11	FLDEND		0 ~ 15	9	
447		YCbCr (1035i)	[5BNC - Video Card]			
	0	Total Dots		0 ~ 3000	2200	
	1	Disp Dots		0 ~ 3000	1854	
	2	H Back Porch		0 ~ 3000	284	
	3	V Back Porch		0 ~ 3000	90	
	4	Disp Line		0 ~ 1500	1010	
	8	VSBEG		0 ~ 15	2	
	9	Filed Enable		0 ~ 1	1	
	10	FLDBEG		0 ~ 15	3	
	11	FLDEND		0 ~ 15	9	
448		YCbCr (1080i -50)	[5BNC - Video Card]			
	0	Total Dots		0 ~ 3000	2640	
	1	Disp Dots		0 ~ 3000	1918	
	2	H Back Porch		0 ~ 3000	218	
	3	V Back Porch		0 ~ 3000	39	
	4	Disp Line		0 ~ 1500	1081	
	8	VSBEG		0 ~ 15	2	
	9	Filed Enable		0 ~ 1	1	
	10	FLDBEG		0 ~ 15	3	
	11	FLDEND		0 ~ 15	9	
449		YCbCr (1080P -60)	[5BNC - Video Card]			
	0	Total Dots		0 ~ 3000	1565	
	1	Disp Dots		0 ~ 3000	1362	
	2	H Back Porch		0 ~ 3000	160	
	3	V Back Porch		0 ~ 3000	41	
	4	Disp Line		0 ~ 1500	1080	
	8	VSBEG		0 ~ 15	2	
	9	Filed Enable		0 ~ 1	0	
	10	FLDBEG		0 ~ 15	0	
	11	FLDEND		0 ~ 15	0	
450		YCbCr (1080P -50)	[5BNC - Video Card]			
	0	Total Dots		0 ~ 3000	1878	
	1	Disp Dots		0 ~ 3000	1362	
	2	H Back Porch		0 ~ 3000	160	
	3	V Back Porch		0 ~ 3000	41	
	4	Disp Line		0 ~ 1500	1080	
	8	VSBEG		0 ~ 15	2	
	9	Filed Enable		0 ~ 1	0	
	10	FLDBEG		0 ~ 15	0	
	11	FLDEND		0 ~ 15	0	
452		YCbCr (1080P -30)	[5BNC - Video Card]			
	0	Total Dots		0 ~ 3000	1565	
	1	Disp Dots		0 ~ 3000	1362	
	2	H Back Porch		0 ~ 3000	160	
	3	V Back Porch		0 ~ 3000	41	
	4	Disp Line		0 ~ 1500	1080	
	8	VSBEG		0 ~ 15	2	
	9	Filed Enable		0 ~ 1	0	
	10	FLDBEG		0 ~ 15	0	
	11	FLDEND		0 ~ 15	0	
453		YCbCr (1080P -25)	[5BNC - Video Card]			
	0	Total Dots		0 ~ 3000	1878	
	1	Disp Dots		0 ~ 3000	1362	
	2	H Back Porch		0 ~ 3000	160	
	3	V Back Porch		0 ~ 3000	41	
	4	Disp Line		0 ~ 1500	1080	
	8	VSBEG		0 ~ 15	2	
	9	Filed Enable		0 ~ 1	0	
	10	FLDBEG		0 ~ 15	0	
	11	FLDEND		0 ~ 15	0	
454		YCbCr (1080P -48)	[5BNC - Video Card]			
	0	Total Dots		0 ~ 3000	1957	
	1	Disp Dots		0 ~ 3000	1362	
	2	H Back Porch		0 ~ 3000	160	
	3	V Back Porch		0 ~ 3000	41	
	4	Disp Line		0 ~ 1500	1080	
	8	VSBEG		0 ~ 15	2	
	9	Filed Enable		0 ~ 1	0	
	10	FLDBEG		0 ~ 15	0	

GROUP	NO.	ITEM	FUNCTION	RANGE	INITIAL VALUE	NOTE
	11	FLDEND		0 ~ 15	0	
455		YCbCr (1080 - 30psf)	[5BNC - Video Card]			
	0	Total Dots		0 ~ 3000	2200	
	1	Disp Dots		0 ~ 3000	1874	
	2	H Back Porch		0 ~ 3000	220	
	3	V Back Porch		0 ~ 3000	54	
	4	Disp Line		0 ~ 1500	1050	
	8	VSBEG		0 ~ 15	2	
	9	Filed Enable		0 ~ 1	0	
	10	FLDBEG		0 ~ 15	0	
	11	FLDEND		0 ~ 15	0	
456		YCbCr (1080-25psf)	[5BNC - Video Card]			
	0	Total Dots		0 ~ 3000	2640	
	1	Disp Dots		0 ~ 3000	1874	
	2	H Back Porch		0 ~ 3000	220	
	3	V Back Porch		0 ~ 3000	54	
	4	Disp Line		0 ~ 1500	1050	
	8	VSBEG		0 ~ 15	2	
	9	Filed Enable		0 ~ 1	0	
	10	FLDBEG		0 ~ 15	0	
	11	FLDEND		0 ~ 15	0	
457		YCbCr (1080-24psf)	[5BNC - Video Card]			
	0	Total Dots		0 ~ 3000	2750	
	1	Disp Dots		0 ~ 3000	1874	
	2	H Back Porch		0 ~ 3000	254	
	3	V Back Porch		0 ~ 3000	54	
	4	Disp Line		0 ~ 1500	1050	
	8	VSBEG		0 ~ 15	2	
	9	Filed Enable		0 ~ 1	0	
	10	FLDBEG		0 ~ 15	0	
	11	FLDEND		0 ~ 15	0	
460		RGB Video (480i)	[5BNC - Video Card]			
	0	Total Dots		0 ~ 3000	1292	
	1	Disp Dots		0 ~ 3000	1024	
	2	H Back Porch		0 ~ 3000	198	
	3	V Back Porch		0 ~ 3000	44	
	4	Disp Line		0 ~ 1500	468	
	8	VSBEG		0 ~ 15	1	
	9	Filed Enable		0 ~ 1	1	
	10	FLDBEG		0 ~ 15	2	
	11	FLDEND		0 ~ 15	9	
461		RGB Video (575i)	[5BNC - Video Card]			
	0	Total Dots		0 ~ 3000	1322	
	1	Disp Dots		0 ~ 3000	1024	
	2	H Back Porch		0 ~ 3000	223	
	3	V Back Porch		0 ~ 3000	58	
	4	Disp Line		0 ~ 1500	552	
	8	VSBEG		0 ~ 15	1	
	9	Filed Enable		0 ~ 1	1	
	10	FLDBEG		0 ~ 15	2	
	11	FLDEND		0 ~ 15	9	
462		RGB Video (480P)	[5BNC - Video Card]			
	0	Total Dots		0 ~ 3000	1245	
	1	Disp Dots		0 ~ 3000	1024	
	2	H Back Porch		0 ~ 3000	168	
	3	V Back Porch		0 ~ 3000	39	
	4	Disp Line		0 ~ 1500	476	
	8	VSBEG		0 ~ 15	2	
	9	Filed Enable		0 ~ 1	0	
	10	FLDBEG		0 ~ 15	0	
	11	FLDEND		0 ~ 15	0	
463		RGB Video (575P)	[5BNC - Video Card]			
	0	Total Dots		0 ~ 3000	1278	
	1	Disp Dots		0 ~ 3000	1024	
	2	H Back Porch		0 ~ 3000	200	
	3	V Back Porch		0 ~ 3000	49	
	4	Disp Line		0 ~ 1500	550	
	8	VSBEG		0 ~ 15	2	
	9	Filed Enable		0 ~ 1	0	
	10	FLDBEG		0 ~ 15	0	
	11	FLDEND		0 ~ 15	0	
464		RGB Video (720P - 60)	[5BNC - Video Card]			
	0	Total Dots		0 ~ 3000	1650	
	1	Disp Dots		0 ~ 3000	1268	

GROUP	NO.	ITEM	FUNCTION	RANGE	INITIAL VALUE	NOTE
	2	H Back Porch		0 ~ 3000	284	
	3	V Back Porch		0 ~ 3000	25	
	4	Disp Line		0 ~ 1500	719	
	8	VSBEG		0 ~ 15	2	
	9	Filed Enable		0 ~ 1	0	
	10	FLDBEG		0 ~ 15	0	
	11	FLDEND		0 ~ 15	0	
465		RGB Video (720P - 50)	[5BNC - Video Card]			
	0	Total Dots		0 ~ 3000	1980	
	1	Disp Dots		0 ~ 3000	1270	
	2	H Back Porch		0 ~ 3000	283	
	3	V Back Porch		0 ~ 3000	26	
	4	Disp Line		0 ~ 1500	719	
	8	VSBEG		0 ~ 15	2	
	9	Filed Enable		0 ~ 1	0	
	10	FLDBEG		0 ~ 15	0	
	11	FLDEND		0 ~ 15	0	
466		RGB Video (1080i - 60)	[5BNC - Video Card]			
	0	Total Dots		0 ~ 3000	2200	
	1	Disp Dots		0 ~ 3000	1910	
	2	H Back Porch		0 ~ 3000	219	
	3	V Back Porch		0 ~ 3000	42	
	4	Disp Line		0 ~ 1500	1080	
	8	VSBEG		0 ~ 15	1	
	9	Filed Enable		0 ~ 1	1	
	10	FLDBEG		0 ~ 15	2	
	11	FLDEND		0 ~ 15	9	
467		RGB Video (1035i)	[5BNC - Video Card]			
	0	Total Dots		0 ~ 3000	2200	
	1	Disp Dots		0 ~ 3000	1852	
	2	H Back Porch		0 ~ 3000	247	
	3	V Back Porch		0 ~ 3000	93	
	4	Disp Line		0 ~ 1500	1008	
	8	VSBEG		0 ~ 15	1	
	9	Filed Enable		0 ~ 1	1	
	10	FLDBEG		0 ~ 15	2	
	11	FLDEND		0 ~ 15	9	
468		RGB Video (1080i - 50)	[5BNC - Video Card]			
	0	Total Dots		0 ~ 3000	2640	
	1	Disp Dots		0 ~ 3000	1916	
	2	H Back Porch		0 ~ 3000	218	
	3	V Back Porch		0 ~ 3000	41	
	4	Disp Line		0 ~ 1500	1081	
	8	VSBEG		0 ~ 15	1	
	9	Filed Enable		0 ~ 1	1	
	10	FLDBEG		0 ~ 15	2	
	11	FLDEND		0 ~ 15	9	
469		RGB Video (1080P - 60)	[5BNC - Video Card]			
	0	Total Dots		0 ~ 3000	1565	
	1	Disp Dots		0 ~ 3000	1362	
	2	H Back Porch		0 ~ 3000	160	
	3	V Back Porch		0 ~ 3000	41	
	4	Disp Line		0 ~ 1500	1080	
	8	VSBEG		0 ~ 15	2	
	9	Filed Enable		0 ~ 1	0	
	10	FLDBEG		0 ~ 15	0	
	11	FLDEND		0 ~ 15	0	
470		RGB Video (1080P - 50)	[5BNC - Video Card]			
	0	Total Dots		0 ~ 3000	1878	
	1	Disp Dots		0 ~ 3000	1362	
	2	H Back Porch		0 ~ 3000	160	
	3	V Back Porch		0 ~ 3000	41	
	4	Disp Line		0 ~ 1500	1080	
	8	VSBEG		0 ~ 15	2	
	9	Filed Enable		0 ~ 1	0	
	10	FLDBEG		0 ~ 15	0	
	11	FLDEND		0 ~ 15	0	
472		RGB Video (1080P - 30)	[5BNC - Video Card]			
	0	Total Dots		0 ~ 3000	1565	
	1	Disp Dots		0 ~ 3000	1362	
	2	H Back Porch		0 ~ 3000	160	
	3	V Back Porch		0 ~ 3000	41	
	4	Disp Line		0 ~ 1500	1080	
	8	VSBEG		0 ~ 15	2	
	9	Filed Enable		0 ~ 1	0	

GROUP	NO.	ITEM	FUNCTION	RANGE	INITIAL VALUE	NOTE
	10	FLDBEG		0 ~ 15	0	
	11	FLDEND		0 ~ 15	0	
473		RGB Video (1080P - 25)	[5BNC - Video Card]			
	0	Total Dots		0 ~ 3000	1878	
	1	Disp Dots		0 ~ 3000	1362	
	2	H Back Porch		0 ~ 3000	160	
	3	V Back Porch		0 ~ 3000	41	
	4	Disp Line		0 ~ 1500	1080	
	8	VSBEG		0 ~ 15	2	
	9	Filed Enable		0 ~ 1	0	
	10	FLDBEG		0 ~ 15	0	
	11	FLDEND		0 ~ 15	0	
474		RGB Video (1080P -48)	[5BNC - Video Card]			
	0	Total Dots		0 ~ 3000	1957	
	1	Disp Dots		0 ~ 3000	1362	
	2	H Back Porch		0 ~ 3000	160	
	3	V Back Porch		0 ~ 3000	41	
	4	Disp Line		0 ~ 1500	1080	
	8	VSBEG		0 ~ 15	2	
	9	Filed Enable		0 ~ 1	0	
	10	FLDBEG		0 ~ 15	0	
	11	FLDEND		0 ~ 15	0	
475		RGB Video (1080 - 30psf)	[5BNC - Video Card]			
	0	Total Dots		0 ~ 3000	2200	
	1	Disp Dots		0 ~ 3000	1916	
	2	H Back Porch		0 ~ 3000	217	
	3	V Back Porch		0 ~ 3000	40	
	4	Disp Line		0 ~ 1500	1080	
	8	VSBEG		0 ~ 15	2	
	9	Filed Enable		0 ~ 1	0	
	10	FLDBEG		0 ~ 15	0	
	11	FLDEND		0 ~ 15	0	
476		RGB Video (1080 - 25psf)	[5BNC - Video Card]			
	0	Total Dots		0 ~ 3000	2640	
	1	Disp Dots		0 ~ 3000	1916	
	2	H Back Porch		0 ~ 3000	217	
	3	V Back Porch		0 ~ 3000	40	
	4	Disp Line		0 ~ 1500	1080	
	8	VSBEG		0 ~ 15	2	
	9	Filed Enable		0 ~ 1	0	
	10	FLDBEG		0 ~ 15	0	
	11	FLDEND		0 ~ 15	0	
477		RGB Video (1080 - 24psf)	[5BNC - Video Card]			
	0	Total Dots		0 ~ 3000	2750	
	1	Disp Dots		0 ~ 3000	1914	
	2	H Back Porch		0 ~ 3000	218	
	3	V Back Porch		0 ~ 3000	40	
	4	Disp Line		0 ~ 1500	1080	
	8	VSBEG		0 ~ 15	2	
	9	Filed Enable		0 ~ 1	0	
	10	FLDBEG		0 ~ 15	0	
	11	FLDEND		0 ~ 15	0	
480		HDCP (480i)	[All Board Common]			
	7	Over Scan	Over Scan Rate (0~25.5%, : 0.1% Step)	0 ~ 255	0	
	8	VSBEG		0 ~ 15	2	
481		HDCP (575i)	[All Board Common]			
	7	Over Scan	Over Scan Rate (0~25.5%, : 0.1% Step)	0 ~ 255	0	
	8	VSBEG		0 ~ 15	2	
482		HDCP (480P)	[All Board Common]			
	7	Over Scan	Over Scan Rate (0~25.5%, : 0.1% Step)	0 ~ 255	0	
	8	VSBEG		0 ~ 15	2	
483		HDCP (575P)	[All Board Common]			
	7	Over Scan	Over Scan Rate (0~25.5%, : 0.1% Step)	0 ~ 255	0	
	8	VSBEG		0 ~ 15	2	
484		HDCP (720P - 60)	[All Board Common]			
	7	Over Scan	Over Scan Rate (0~25.5%, : 0.1% Step)	0 ~ 255	0	
	8	VSBEG		0 ~ 15	2	
485		HDCP (720P - 50)	[All Board Common]			
	7	Over Scan	Over Scan Rate (0~25.5%, : 0.1% Step)	0 ~ 255	0	
	8	VSBEG		0 ~ 15	2	

GROUP	NO.	ITEM	FUNCTION	RANGE	INITIAL VALUE	NOTE
485		HDCP (720P - 50)	[All Board Common]			
	7	Over Scan	Over Scan Rate (0~25.5%, : 0.1% Step)	0 ~ 255	0	
	8	VSBEG		0 ~ 15	2	
486		HDCP (1080i - 60)	[All Board Common]			
	7	Over Scan	Over Scan Rate (0~25.5%, : 0.1% Step)	0 ~ 255	0	
	8	VSBEG		0 ~ 15	2	
487		HDCP (1035i)	[All Board Common]			
	7	Over Scan	Over Scan Rate (0~25.5%, : 0.1% Step)	0 ~ 255	0	
	8	VSBEG		0 ~ 15	2	
488		HDCP (1080i - 50)	[All Board Common]			
	7	Over Scan	Over Scan Rate (0~25.5%, : 0.1% Step)	0 ~ 255	0	
	8	VSBEG		0 ~ 15	2	
489		HDCP (1080P - 60)	[All Board Common]			
	7	Over Scan	Over Scan Rate (0~25.5%, : 0.1% Step)	0 ~ 255	0	
	8	VSBEG		0 ~ 15	2	
490		HDCP (1080P - 50)	[All Board Common]			
	7	Over Scan	Over Scan Rate (0~25.5%, : 0.1% Step)	0 ~ 255	0	
	8	VSBEG		0 ~ 15	2	
492		HDCP (1080P- 30)	[All Board Common]			
	7	Over Scan	Over Scan Rate (0~25.5%, : 0.1% Step)	0 ~ 255	0	
	8	VSBEG		0 ~ 15	2	
493		HDCP (1080P- 25)	[All Board Common]			
	7	Over Scan	Over Scan Rate (0~25.5%, : 0.1% Step)	0 ~ 255	0	
	8	VSBEG		0 ~ 15	2	
494		HDCP (1080P- 48)	[All Board Common]			
	7	Over Scan	Over Scan Rate (0~25.5%, : 0.1% Step)	0 ~ 255	0	
	8	VSBEG		0 ~ 15	2	
495		HDCP (1080 - 30psf)	[All Board Common]			
	7	Over Scan	Over Scan Rate (0~25.5%, : 0.1% Step)	0 ~ 255	0	
	8	VSBEG		0 ~ 15	2	
496		HDCP (1080 - 25psf)	[All Board Common]			
	7	Over Scan	Over Scan Rate (0~25.5%, : 0.1% Step)	0 ~ 255	0	
	8	VSBEG		0 ~ 15	2	
497		HDCP (1080 - 24psf)	[All Board Common]			
	7	Over Scan	Over Scan Rate (0~25.5%, : 0.1% Step)	0 ~ 255	0	
	8	VSBEG		0 ~ 15	2	
500		SCART (480i)	[DVI - HDCP Card]			
	0	Total Dots		0 ~ 3000	1292	
	1	Disp Dots		0 ~ 3000	1024	
	2	H Back Porch		0 ~ 3000	193	
	3	V Back Porch		0 ~ 3000	42	
	4	Disp Line		0 ~ 1500	468	
	8	VSBEG		0 ~ 15	2	
	9	Filed Enable		0 ~ 1	1	
	10	FLDBEG		0 ~ 15	7	
	11	FLDEND		0 ~ 15	13	
501		SCART (575i)	[DVI - HDCP Card]			
	0	Total Dots		0 ~ 3000	1322	
	1	Disp Dots		0 ~ 3000	1024	
	2	H Back Porch		0 ~ 3000	221	
	3	V Back Porch		0 ~ 3000	57	
	4	Disp Line		0 ~ 1500	552	
	8	VSBEG		0 ~ 15	2	
	9	Filed Enable		0 ~ 1	1	
	10	FLDBEG		0 ~ 15	7	
	11	FLDEND		0 ~ 15	13	
510		RGB Video (480I)	[DVI - HDCP Card]			
	0	Total Dots		0 ~ 3000	1292	
	1	Disp Dots		0 ~ 3000	1024	
	2	H Back Porch		0 ~ 3000	190	
	3	V Back Porch		0 ~ 3000	42	
	4	Disp Line		0 ~ 1500	468	
	8	VSBEG		0 ~ 15	1	
	9	Filed Enable		0 ~ 1	1	
	10	FLDBEG		0 ~ 15	1	
	11	FLDEND		0 ~ 15	9	
511		RGB Video (575i)	[DVI - HDCP Card]			

GROUP	NO.	ITEM	FUNCTION	RANGE	INITIAL VALUE	NOTE
	0	Total Dots		0 ~ 3000	1322	
	1	Disp Dots		0 ~ 3000	1024	
	2	H Back Porch		0 ~ 3000	219	
	3	V Back Porch		0 ~ 3000	56	
	4	Disp Line		0 ~ 1500	552	
	8	VSBEG		0 ~ 15	1	
	9	Filed Enable		0 ~ 1	1	
	10	FLDBEG		0 ~ 15	1	
	11	FLDEND		0 ~ 15	9	
512		RGB Video (480P)	[DVI - HDCP Card]			
	0	Total Dots		0 ~ 3000	1245	
	1	Disp Dots		0 ~ 3000	1024	
	2	H Back Porch		0 ~ 3000	168	
	3	V Back Porch		0 ~ 3000	40	
	4	Disp Line		0 ~ 1500	475	
	8	VSBEG		0 ~ 15	2	
	9	Filed Enable		0 ~ 1	0	
	10	FLDBEG		0 ~ 15	0	
	11	FLDEND		0 ~ 15	0	
513		RGB Video (575P)	[DVI - HDCP Card]			
	0	Total Dots		0 ~ 3000	1278	
	1	Disp Dots		0 ~ 3000	1024	
	2	H Back Porch		0 ~ 3000	199	
	3	V Back Porch		0 ~ 3000	49	
	4	Disp Line		0 ~ 1500	550	
	8	VSBEG		0 ~ 15	2	
	9	Filed Enable		0 ~ 1	0	
	10	FLDBEG		0 ~ 15	0	
	11	FLDEND		0 ~ 15	0	
514		RGB Video (720P - 60))	[DVI - HDCP Card]			
	0	Total Dots		0 ~ 3000	1650	
	1	Disp Dots		0 ~ 3000	1270	
	2	H Back Porch		0 ~ 3000	284	
	3	V Back Porch		0 ~ 3000	26	
	4	Disp Line		0 ~ 1500	720	
	8	VSBEG		0 ~ 15	2	
	9	Filed Enable		0 ~ 1	0	
	10	FLDBEG		0 ~ 15	0	
	11	FLDEND		0 ~ 15	0	
515		RGB Video (720P - 50)	[DVI - HDCP Card]			
	0	Total Dots		0 ~ 3000	1980	
	1	Disp Dots		0 ~ 3000	1270	
	2	H Back Porch		0 ~ 3000	282	
	3	V Back Porch		0 ~ 3000	27	
	4	Disp Line		0 ~ 1500	719	
	8	VSBEG		0 ~ 15	2	
	9	Filed Enable		0 ~ 1	0	
	10	FLDBEG		0 ~ 15	0	
	11	FLDEND		0 ~ 15	0	
516		RGB Video (1080i - 60)	[DVI - HDCP Card]			
	0	Total Dots		0 ~ 3000	2200	
	1	Disp Dots		0 ~ 3000	1910	
	2	H Back Porch		0 ~ 3000	219	
	3	V Back Porch		0 ~ 3000	42	
	4	Disp Line		0 ~ 1500	1080	
	8	VSBEG		0 ~ 15	1	
	9	Filed Enable		0 ~ 1	1	
	10	FLDBEG		0 ~ 15	2	
	11	FLDEND		0 ~ 15	9	
517		RGB Video (1035i)	[DVI - HDCP Card]			
	0	Total Dots		0 ~ 3000	2200	
	1	Disp Dots		0 ~ 3000	1852	
	2	H Back Porch		0 ~ 3000	247	
	3	V Back Porch		0 ~ 3000	92	
	4	Disp Line		0 ~ 1500	1010	
	8	VSBEG		0 ~ 15	1	
	9	Filed Enable		0 ~ 1	1	
	10	FLDBEG		0 ~ 15	2	
	11	FLDEND		0 ~ 15	9	
518		RGB Video (1080i - 50)	[DVI - HDCP Card]			
	0	Total Dots		0 ~ 3000	2640	
	1	Disp Dots		0 ~ 3000	1916	
	2	H Back Porch		0 ~ 3000	218	
	3	V Back Porch		0 ~ 3000	41	
	4	Disp Line		0 ~ 1500	1081	

GROUP	NO.	ITEM	FUNCTION	RANGE	INITIAL VALUE	NOTE
	8	VSBEG		0 ~ 15	1	
	9	Filed Enable		0 ~ 1	1	
	10	FLDBEG		0 ~ 15	2	
	11	FLDEND		0 ~ 15	9	
519		RGB Video (1080P- 60)	[DVI - HDCP Card]			
	0	Total Dots		0 ~ 3000	1565	
	1	Disp Dots		0 ~ 3000	1362	
	2	H Back Porch		0 ~ 3000	160	
	3	V Back Porch		0 ~ 3000	41	
	4	Disp Line		0 ~ 1500	1080	
	8	VSBEG		0 ~ 15	2	
	9	Filed Enable		0 ~ 1	0	
	10	FLDBEG		0 ~ 15	0	
	11	FLDEND		0 ~ 15	0	
520		RGB Video (1080P- 50)	[DVI - HDCP Card]			
	0	Total Dots		0 ~ 3000	1878	
	1	Disp Dots		0 ~ 3000	1362	
	2	H Back Porch		0 ~ 3000	160	
	3	V Back Porch		0 ~ 3000	41	
	4	Disp Line		0 ~ 1500	1080	
	8	VSBEG		0 ~ 15	2	
	9	Filed Enable		0 ~ 1	0	
	10	FLDBEG		0 ~ 15	0	
	11	FLDEND		0 ~ 15	0	
522		RGB Video (1080P- 30)	[DVI - HDCP Card]			
	0	Total Dots		0 ~ 3000	1565	
	1	Disp Dots		0 ~ 3000	1362	
	2	H Back Porch		0 ~ 3000	160	
	3	V Back Porch		0 ~ 3000	41	
	4	Disp Line		0 ~ 1500	1080	
	8	VSBEG		0 ~ 15	2	
	9	Filed Enable		0 ~ 1	0	
	10	FLDBEG		0 ~ 15	0	
	11	FLDEND		0 ~ 15	0	
523		RGB Video (1080P- 25)	[DVI - HDCP Card]			
	0	Total Dots		0 ~ 3000	1878	
	1	Disp Dots		0 ~ 3000	1362	
	2	H Back Porch		0 ~ 3000	160	
	3	V Back Porch		0 ~ 3000	41	
	4	Disp Line		0 ~ 1500	1080	
	8	VSBEG		0 ~ 15	2	
	9	Filed Enable		0 ~ 1	0	
	10	FLDBEG		0 ~ 15	0	
	11	FLDEND		0 ~ 15	0	
524		RGB Video (1080P- 48)	[DVI - HDCP Card]			
	0	Total Dots		0 ~ 3000	1957	
	1	Disp Dots		0 ~ 3000	1362	
	2	H Back Porch		0 ~ 3000	160	
	3	V Back Porch		0 ~ 3000	41	
	4	Disp Line		0 ~ 1500	1080	
	8	VSBEG		0 ~ 15	2	
	9	Filed Enable		0 ~ 1	0	
	10	FLDBEG		0 ~ 15	0	
	11	FLDEND		0 ~ 15	0	
525		RGB Video (1080 - 30psf)	[DVI - HDCP Card]			
	0	Total Dots		0 ~ 3000	2200	
	1	Disp Dots		0 ~ 3000	1910	
	2	H Back Porch		0 ~ 3000	219	
	3	V Back Porch		0 ~ 3000	40	
	4	Disp Line		0 ~ 1500	1080	
	8	VSBEG		0 ~ 15	2	
	9	Filed Enable		0 ~ 1	0	
	10	FLDBEG		0 ~ 15	0	
	11	FLDEND		0 ~ 15	0	
526		RGB Video (1080 - 25psf)	[DVI - HDCP Card]			
	0	Total Dots		0 ~ 3000	2640	
	1	Disp Dots		0 ~ 3000	1916	
	2	H Back Porch		0 ~ 3000	217	
	3	V Back Porch		0 ~ 3000	40	
	4	Disp Line		0 ~ 1500	1080	
	8	VSBEG		0 ~ 15	2	
	9	Filed Enable		0 ~ 1	0	
	10	FLDBEG		0 ~ 15	0	
	11	FLDEND		0 ~ 15	0	

GROUP	NO.	ITEM	FUNCTION	RANGE	INITIAL VALUE	NOTE
527		RGB Video (1080 - 24psf)	[DVI - HDCP Card]			
	0	Total Dots		0 ~ 3000	2750	
	1	Disp Dots		0 ~ 3000	1914	
	2	H Back Porch		0 ~ 3000	217	
	3	V Back Porch		0 ~ 3000	40	
	4	Disp Line		0 ~ 1500	1080	
	8	VSBEG		0 ~ 15	2	
	9	Filed Enable		0 ~ 1	0	
	10	FLDBEG		0 ~ 15	0	
	11	FLDEND		0 ~ 15	0	
530		YCbCr (480i)	[5BNC Card]			
	0	Total Dots		0 ~ 3000	1292	
	1	Disp Dots		0 ~ 3000	1024	
	2	H Back Porch		0 ~ 3000	194	
	3	V Back Porch		0 ~ 3000	43	
	4	Disp Line		0 ~ 1500	468	
	8	VSBEG		0 ~ 15	2	
	9	Filed Enable		0 ~ 1	1	
	10	FLDBEG		0 ~ 15	7	
	11	FLDEND		0 ~ 15	13	
531		YCbCr (575i)	[5BNC Card]			
	0	Total Dots		0 ~ 3000	1322	
	1	Disp Dots		0 ~ 3000	1024	
	2	H Back Porch		0 ~ 3000	221	
	3	V Back Porch		0 ~ 3000	58	
	4	Disp Line		0 ~ 1500	552	
	8	VSBEG		0 ~ 15	2	
	9	Filed Enable		0 ~ 1	1	
	10	FLDBEG		0 ~ 15	7	
	11	FLDEND		0 ~ 15	13	
532		YCbCr (480P)	[5BNC Card]			
	0	Total Dots		0 ~ 3000	1245	
	1	Disp Dots		0 ~ 3000	1024	
	2	H Back Porch		0 ~ 3000	156	
	3	V Back Porch		0 ~ 3000	38	
	4	Disp Line		0 ~ 1500	474	
	8	VSBEG		0 ~ 15	2	
	9	Filed Enable		0 ~ 1	0	
	10	FLDBEG		0 ~ 15	0	
	11	FLDEND		0 ~ 15	0	
533		YCbCr (575P)	[5BNC Card]			
	0	Total Dots		0 ~ 3000	1278	
	1	Disp Dots		0 ~ 3000	1024	
	2	H Back Porch		0 ~ 3000	186	
	3	V Back Porch		0 ~ 3000	48	
	4	Disp Line		0 ~ 1500	550	
	8	VSBEG		0 ~ 15	2	
	9	Filed Enable		0 ~ 1	0	
	10	FLDBEG		0 ~ 15	0	
	11	FLDEND		0 ~ 15	0	
534		YCbCr (720P - 60)	[5BNC Card]			
	0	Total Dots		0 ~ 3000	1650	
	1	Disp Dots		0 ~ 3000	1270	
	2	H Back Porch		0 ~ 3000	257	
	3	V Back Porch		0 ~ 3000	25	
	4	Disp Line		0 ~ 1500	719	
	8	VSBEG		0 ~ 15	2	
	9	Filed Enable		0 ~ 1	0	
	10	FLDBEG		0 ~ 15	0	
	11	FLDEND		0 ~ 15	0	
535		YCbCr (720P - 50)	[5BNC Card]			
	0	Total Dots		0 ~ 3000	1980	
	1	Disp Dots		0 ~ 3000	1270	
	2	H Back Porch		0 ~ 3000	253	
	3	V Back Porch		0 ~ 3000	26	
	4	Disp Line		0 ~ 1500	719	
	8	VSBEG		0 ~ 15	2	
	9	Filed Enable		0 ~ 1	0	
	10	FLDBEG		0 ~ 15	0	
	11	FLDEND		0 ~ 15	0	
536		YCbCr (1080i - 60)	[5BNC Card]			
	0	Total Dots		0 ~ 3000	2200	
	1	Disp Dots		0 ~ 3000	1910	
	2	H Back Porch		0 ~ 3000	192	
	3	V Back Porch		0 ~ 3000	38	

GROUP	NO.	ITEM	FUNCTION	RANGE	INITIAL VALUE	NOTE
	4	Disp Line		0 ~ 1500	1082	
	8	VSBEG		0 ~ 15	2	
	9	Filed Enable		0 ~ 1	1	
	10	FLDBEG		0 ~ 15	3	
	11	FLDEND		0 ~ 15	9	
537		YCbCr (1035i)	[5BNC Card]			
	0	Total Dots		0 ~ 3000	2200	
	1	Disp Dots		0 ~ 3000	1852	
	2	H Back Porch		0 ~ 3000	222	
	3	V Back Porch		0 ~ 3000	91	
	4	Disp Line		0 ~ 1500	1010	
	8	VSBEG		0 ~ 15	2	
	9	Filed Enable		0 ~ 1	1	
	10	FLDBEG		0 ~ 15	3	
	11	FLDEND		0 ~ 15	9	
538		YCbCr (1080i - 50)	[5BNC Card]			
	0	Total Dots		0 ~ 3000	2640	
	1	Disp Dots		0 ~ 3000	1916	
	2	H Back Porch		0 ~ 3000	189	
	3	V Back Porch		0 ~ 3000	38	
	4	Disp Line		0 ~ 1500	1082	
	8	VSBEG		0 ~ 15	2	
	9	Filed Enable		0 ~ 1	1	
	10	FLDBEG		0 ~ 15	3	
	11	FLDEND		0 ~ 15	9	
539		YCbCr (1080P - 60)	[5BNC Card]			
	0	Total Dots		0 ~ 3000	1565	
	1	Disp Dots		0 ~ 3000	1362	
	2	H Back Porch		0 ~ 3000	160	
	3	V Back Porch		0 ~ 3000	41	
	4	Disp Line		0 ~ 1500	1080	
	8	VSBEG		0 ~ 15	2	
	9	Filed Enable		0 ~ 1	0	
	10	FLDBEG		0 ~ 15	0	
	11	FLDEND		0 ~ 15	0	
540		YCbCr (1080P - 50)	[5BNC Card]			
	0	Total Dots		0 ~ 3000	1878	
	1	Disp Dots		0 ~ 3000	1362	
	2	H Back Porch		0 ~ 3000	160	
	3	V Back Porch		0 ~ 3000	41	
	4	Disp Line		0 ~ 1500	1080	
	8	VSBEG		0 ~ 15	2	
	9	Filed Enable		0 ~ 1	0	
	10	FLDBEG		0 ~ 15	0	
	11	FLDEND		0 ~ 15	0	
542		YCbCr (1080P - 30)	[5BNC Card]			
	0	Total Dots		0 ~ 3000	1565	
	1	Disp Dots		0 ~ 3000	1362	
	2	H Back Porch		0 ~ 3000	160	
	3	V Back Porch		0 ~ 3000	41	
	4	Disp Line		0 ~ 1500	1080	
	8	VSBEG		0 ~ 15	2	
	9	Filed Enable		0 ~ 1	0	
	10	FLDBEG		0 ~ 15	0	
	11	FLDEND		0 ~ 15	0	
543		YCbCr (1080P - 25)	[5BNC Card]			
	0	Total Dots		0 ~ 3000	1878	
	1	Disp Dots		0 ~ 3000	1362	
	2	H Back Porch		0 ~ 3000	160	
	3	V Back Porch		0 ~ 3000	41	
	4	Disp Line		0 ~ 1500	1080	
	8	VSBEG		0 ~ 15	2	
	9	Filed Enable		0 ~ 1	0	
	10	FLDBEG		0 ~ 15	0	
	11	FLDEND		0 ~ 15	0	
544		YCbCr (1080P - 24)	[5BNC Card]			
	0	Total Dots		0 ~ 3000	1957	
	1	Disp Dots		0 ~ 3000	1362	
	2	H Back Porch		0 ~ 3000	160	
	3	V Back Porch		0 ~ 3000	41	
	4	Disp Line		0 ~ 1500	1080	
	8	VSBEG		0 ~ 15	2	
	9	Filed Enable		0 ~ 1	0	
	10	FLDBEG		0 ~ 15	0	
	11	FLDEND		0 ~ 15	0	

GROUP	NO.	ITEM	FUNCTION	RANGE	INITIAL VALUE	NOTE
545		YCbCr (1080 - 30psf)	[5BNC Card]			
	0	Total Dots		0 ~ 3000	2200	
	1	Disp Dots		0 ~ 3000	1874	
	2	H Back Porch		0 ~ 3000	220	
	3	V Back Porch		0 ~ 3000	54	
	4	Disp Line		0 ~ 1500	1050	
	8	VSBEG		0 ~ 15	2	
	9	Filed Enable		0 ~ 1	0	
	10	FLDBEG		0 ~ 15	0	
	11	FLDEND		0 ~ 15	0	
546		YCbCr (1080 - 25psf)	[5BNC Card]			
	0	Total Dots		0 ~ 3000	2640	
	1	Disp Dots		0 ~ 3000	1874	
	2	H Back Porch		0 ~ 3000	220	
	3	V Back Porch		0 ~ 3000	54	
	4	Disp Line		0 ~ 1500	1050	
	8	VSBEG		0 ~ 15	2	
	9	Filed Enable		0 ~ 1	0	
	10	FLDBEG		0 ~ 15	0	
	11	FLDEND		0 ~ 15	0	
547		YCbCr (1080 - 24psf)	[5BNC Card]			
	0	Total Dots		0 ~ 3000	2750	
	1	Disp Dots		0 ~ 3000	1874	
	2	H Back Porch		0 ~ 3000	254	
	3	V Back Porch		0 ~ 3000	54	
	4	Disp Line		0 ~ 1500	1050	
	8	VSBEG		0 ~ 15	2	
	9	Filed Enable		0 ~ 1	0	
	10	FLDBEG		0 ~ 15	0	
	11	FLDEND		0 ~ 15	0	
550		RGB Video (480i)	[5BNC Card]			
	0	Total Dots		0 ~ 3000	1292	
	1	Disp Dots		0 ~ 3000	1024	
	2	H Back Porch		0 ~ 3000	193	
	3	V Back Porch		0 ~ 3000	43	
	4	Disp Line		0 ~ 1500	468	
	8	VSBEG		0 ~ 15	2	
	9	Filed Enable		0 ~ 1	1	
	10	FLDBEG		0 ~ 15	5	
	11	FLDEND		0 ~ 15	12	
551		RGB Video (575i)	[5BNC Card]			
	0	Total Dots		0 ~ 3000	1322	
	1	Disp Dots		0 ~ 3000	1024	
	2	H Back Porch		0 ~ 3000	221	
	3	V Back Porch		0 ~ 3000	58	
	4	Disp Line		0 ~ 1500	552	
	8	VSBEG		0 ~ 15	2	
	9	Filed Enable		0 ~ 1	1	
	10	FLDBEG		0 ~ 15	5	
	11	FLDEND		0 ~ 15	12	
552		RGB Video (480P)	[5BNC Card]			
	0	Total Dots		0 ~ 3000	1245	
	1	Disp Dots		0 ~ 3000	1024	
	2	H Back Porch		0 ~ 3000	155	
	3	V Back Porch		0 ~ 3000	39	
	4	Disp Line		0 ~ 1500	475	
	8	VSBEG		0 ~ 15	2	
	9	Filed Enable		0 ~ 1	0	
	10	FLDBEG		0 ~ 15	0	
	11	FLDEND		0 ~ 15	0	
553		RGB Video (575P)	[5BNC Card]			
	0	Total Dots		0 ~ 3000	1278	
	1	Disp Dots		0 ~ 3000	1024	
	2	H Back Porch		0 ~ 3000	186	
	3	V Back Porch		0 ~ 3000	48	
	4	Disp Line		0 ~ 1500	550	
	8	VSBEG		0 ~ 15	2	
	9	Filed Enable		0 ~ 1	0	
	10	FLDBEG		0 ~ 15	0	
	11	FLDEND		0 ~ 15	0	
554		RGB Video (720P - 60)	[5BNC Card]			
	0	Total Dots		0 ~ 3000	1650	
	1	Disp Dots		0 ~ 3000	1272	
	2	H Back Porch		0 ~ 3000	256	

GROUP	NO.	ITEM	FUNCTION	RANGE	INITIAL VALUE	NOTE
	3	V Back Porch		0 ~ 3000	25	
	4	Disp Line		0 ~ 1500	720	
	8	VSBEG		0 ~ 15	2	
	9	Filed Enable		0 ~ 1	0	
	10	FLDBEG		0 ~ 15	0	
	11	FLDEND		0 ~ 15	0	
555		RGB Video (720P - 50)	[5BNC Card]			
	0	Total Dots		0 ~ 3000	1980	
	1	Disp Dots		0 ~ 3000	1270	
	2	H Back Porch		0 ~ 3000	253	
	3	V Back Porch		0 ~ 3000	26	
	4	Disp Line		0 ~ 1500	719	
	8	VSBEG		0 ~ 15	2	
	9	Filed Enable		0 ~ 1	0	
	10	FLDBEG		0 ~ 15	0	
	11	FLDEND		0 ~ 15	0	
556		RGB Video (1080i - 60)	[5BNC Card]			
	0	Total Dots		0 ~ 3000	2200	
	1	Disp Dots		0 ~ 3000	1910	
	2	H Back Porch		0 ~ 3000	193	
	3	V Back Porch		0 ~ 3000	42	
	4	Disp Line		0 ~ 1500	1080	
	8	VSBEG		0 ~ 15	1	
	9	Filed Enable		0 ~ 1	1	
	10	FLDBEG		0 ~ 15	2	
	11	FLDEND		0 ~ 15	9	
557		RGB Video (1035i)	[5BNC Card]			
	0	Total Dots		0 ~ 3000	2200	
	1	Disp Dots		0 ~ 3000	1854	
	2	H Back Porch		0 ~ 3000	219	
	3	V Back Porch		0 ~ 3000	93	
	4	Disp Line		0 ~ 1500	1008	
	8	VSBEG		0 ~ 15	1	
	9	Filed Enable		0 ~ 1	1	
	10	FLDBEG		0 ~ 15	2	
	11	FLDEND		0 ~ 15	9	
558		RGB Video (1080i - 50)	[5BNC Card]			
	0	Total Dots		0 ~ 3000	2640	
	1	Disp Dots		0 ~ 3000	1920	
	2	H Back Porch		0 ~ 3000	189	
	3	V Back Porch		0 ~ 3000	40	
	4	Disp Line		0 ~ 1500	1082	
	8	VSBEG		0 ~ 15	1	
	9	Filed Enable		0 ~ 1	1	
	10	FLDBEG		0 ~ 15	2	
	11	FLDEND		0 ~ 15	9	
559		RGB Video (1080P - 60)	[5BNC Card]			
	0	Total Dots		0 ~ 3000	1565	
	1	Disp Dots		0 ~ 3000	1362	
	2	H Back Porch		0 ~ 3000	160	
	3	V Back Porch		0 ~ 3000	41	
	4	Disp Line		0 ~ 1500	1080	
	8	VSBEG		0 ~ 15	2	
	9	Filed Enable		0 ~ 1	0	
	10	FLDBEG		0 ~ 15	0	
	11	FLDEND		0 ~ 15	0	
560		RGB Video (1080P - 50)	[5BNC Card]			
	0	Total Dots		0 ~ 3000	1878	
	1	Disp Dots		0 ~ 3000	1362	
	2	H Back Porch		0 ~ 3000	160	
	3	V Back Porch		0 ~ 3000	41	
	4	Disp Line		0 ~ 1500	1080	
	8	VSBEG		0 ~ 15	2	
	9	Filed Enable		0 ~ 1	0	
	10	FLDBEG		0 ~ 15	0	
	11	FLDEND		0 ~ 15	0	
562		RGB Video (1080P - 30)	[5BNC Card]			
	0	Total Dots		0 ~ 3000	1565	
	1	Disp Dots		0 ~ 3000	1362	
	2	H Back Porch		0 ~ 3000	160	
	3	V Back Porch		0 ~ 3000	41	
	4	Disp Line		0 ~ 1500	1080	
	8	VSBEG		0 ~ 15	2	
	9	Filed Enable		0 ~ 1	0	
	10	FLDBEG		0 ~ 15	0	

GROUP	NO.	ITEM	FUNCTION	RANGE	INITIAL VALUE	NOTE
	11	FLDEND		0 ~ 15	0	
563		RGB Video (1080P - 25)	[5BNC Card]			
	0	Total Dots		0 ~ 3000	1878	
	1	Disp Dots		0 ~ 3000	1362	
	2	H Back Porch		0 ~ 3000	160	
	3	V Back Porch		0 ~ 3000	41	
	4	Disp Line		0 ~ 1500	1080	
	8	VSBEG		0 ~ 15	2	
	9	Filed Enable		0 ~ 1	0	
	10	FLDBEG		0 ~ 15	0	
	11	FLDEND		0 ~ 15	0	
564		RGB Video (1080P - 48)	[5BNC Card]			
	0	Total Dots		0 ~ 3000	1957	
	1	Disp Dots		0 ~ 3000	1362	
	2	H Back Porch		0 ~ 3000	160	
	3	V Back Porch		0 ~ 3000	41	
	4	Disp Line		0 ~ 1500	1080	
	8	VSBEG		0 ~ 15	2	
	9	Filed Enable		0 ~ 1	0	
	10	FLDBEG		0 ~ 15	0	
	11	FLDEND		0 ~ 15	0	
565		RGB Video (1080 - 30psf)	[5BNC Card]			
	0	Total Dots		0 ~ 3000	2200	
	1	Disp Dots		0 ~ 3000	1910	
	2	H Back Porch		0 ~ 3000	193	
	3	V Back Porch		0 ~ 3000	40	
	4	Disp Line		0 ~ 1500	1080	
	8	VSBEG		0 ~ 15	2	
	9	Filed Enable		0 ~ 1	0	
	10	FLDBEG		0 ~ 15	0	
	11	FLDEND		0 ~ 15	0	
566		RGB Video (1080 - 25psf)	[5BNC Card]			
	0	Total Dots		0 ~ 3000	2640	
	1	Disp Dots		0 ~ 3000	1916	
	2	H Back Porch		0 ~ 3000	191	
	3	V Back Porch		0 ~ 3000	40	
	4	Disp Line		0 ~ 1500	1080	
	8	VSBEG		0 ~ 15	2	
	9	Filed Enable		0 ~ 1	0	
	10	FLDBEG		0 ~ 15	0	
	11	FLDEND		0 ~ 15	0	
567		RGB Video (1080 - 24psf)	[5BNC Card]			
	0	Total Dots		0 ~ 3000	2750	
	1	Disp Dots		0 ~ 3000	1914	
	2	H Back Porch		0 ~ 3000	192	
	3	V Back Porch		0 ~ 3000	40	
	4	Disp Line		0 ~ 1500	1080	
	8	VSBEG		0 ~ 15	2	
	9	Filed Enable		0 ~ 1	0	
	10	FLDBEG		0 ~ 15	0	
	11	FLDEND		0 ~ 15	0	
570		RGB Video (480i)	[5BNC Card]			
	0	Total Dots		0 ~ 3000	1292	
	1	Disp Dots		0 ~ 3000	1024	
	2	H Back Porch		0 ~ 3000	191	
	3	V Back Porch		0 ~ 3000	42	
	4	Disp Line		0 ~ 1500	468	
	8	VSBEG		0 ~ 15	1	
	9	Filed Enable		0 ~ 1	1	
	10	FLDBEG		0 ~ 15	1	
	11	FLDEND		0 ~ 15	9	
571		RGB Video (575i)	[5BNC Card]			
	0	Total Dots		0 ~ 3000	1322	
	1	Disp Dots		0 ~ 3000	1024	
	2	H Back Porch		0 ~ 3000	218	
	3	V Back Porch		0 ~ 3000	56	
	4	Disp Line		0 ~ 1500	552	
	8	VSBEG		0 ~ 15	1	
	9	Filed Enable		0 ~ 1	1	
	10	FLDBEG		0 ~ 15	1	
	11	FLDEND		0 ~ 15	9	
572		RGB Video (480P)	[5BNC Card]			
	0	Total Dots		0 ~ 3000	1245	
	1	Disp Dots		0 ~ 3000	1024	

GROUP	NO.	ITEM	FUNCTION	RANGE	INITIAL VALUE	NOTE
	2	H Back Porch		0 ~ 3000	168	
	3	V Back Porch		0 ~ 3000	39	
	4	Disp Line		0 ~ 1500	475	
	8	VSBEG		0 ~ 15	2	
	9	Filed Enable		0 ~ 1	0	
	10	FLDBEG		0 ~ 15	0	
	11	FLDEND		0 ~ 15	0	
573		RGB Video (575P)	[5BNC Card]			
	0	Total Dots		0 ~ 3000	1278	
	1	Disp Dots		0 ~ 3000	1024	
	2	H Back Porch		0 ~ 3000	200	
	3	V Back Porch		0 ~ 3000	49	
	4	Disp Line		0 ~ 1500	550	
	8	VSBEG		0 ~ 15	2	
	9	Filed Enable		0 ~ 1	0	
	10	FLDBEG		0 ~ 15	0	
	11	FLDEND		0 ~ 15	0	
574		RGB Video (720P - 60)	[5BNC Card]			
	0	Total Dots		0 ~ 3000	1650	
	1	Disp Dots		0 ~ 3000	1270	
	2	H Back Porch		0 ~ 3000	284	
	3	V Back Porch		0 ~ 3000	26	
	4	Disp Line		0 ~ 1500	720	
	8	VSBEG		0 ~ 15	2	
	9	Filed Enable		0 ~ 1	0	
	10	FLDBEG		0 ~ 15	0	
	11	FLDEND		0 ~ 15	0	
575		RGB Video (720P - 50)	[5BNC Card]			
	0	Total Dots		0 ~ 3000	1980	
	1	Disp Dots		0 ~ 3000	1270	
	2	H Back Porch		0 ~ 3000	281	
	3	V Back Porch		0 ~ 3000	27	
	4	Disp Line		0 ~ 1500	719	
	8	VSBEG		0 ~ 15	2	
	9	Filed Enable		0 ~ 1	0	
	10	FLDBEG		0 ~ 15	0	
	11	FLDEND		0 ~ 15	0	
576		RGB Video (1080i - 60)	[5BNC Card]			
	0	Total Dots		0 ~ 3000	2200	
	1	Disp Dots		0 ~ 3000	1910	
	2	H Back Porch		0 ~ 3000	219	
	3	V Back Porch		0 ~ 3000	41	
	4	Disp Line		0 ~ 1500	1080	
	8	VSBEG		0 ~ 15	1	
	9	Filed Enable		0 ~ 1	1	
	10	FLDBEG		0 ~ 15	2	
	11	FLDEND		0 ~ 15	9	
577		RGB Video (1035i)	[5BNC Card]			
	0	Total Dots		0 ~ 3000	2200	
	1	Disp Dots		0 ~ 3000	1852	
	2	H Back Porch		0 ~ 3000	247	
	3	V Back Porch		0 ~ 3000	92	
	4	Disp Line		0 ~ 1500	1010	
	8	VSBEG		0 ~ 15	1	
	9	Filed Enable		0 ~ 1	1	
	10	FLDBEG		0 ~ 15	2	
	11	FLDEND		0 ~ 15	9	
578		RGB Video (1080i - 50)	[5BNC Card]			
	0	Total Dots		0 ~ 3000	2640	
	1	Disp Dots		0 ~ 3000	1916	
	2	H Back Porch		0 ~ 3000	218	
	3	V Back Porch		0 ~ 3000	41	
	4	Disp Line		0 ~ 1500	1081	
	8	VSBEG		0 ~ 15	1	
	9	Filed Enable		0 ~ 1	1	
	10	FLDBEG		0 ~ 15	2	
	11	FLDEND		0 ~ 15	9	
579		RGB Video (1080P - 60)	[5BNC Card]			
	0	Total Dots		0 ~ 3000	1565	
	1	Disp Dots		0 ~ 3000	1362	
	2	H Back Porch		0 ~ 3000	160	
	3	V Back Porch		0 ~ 3000	41	
	4	Disp Line		0 ~ 1500	1080	
	8	VSBEG		0 ~ 15	2	
	9	Filed Enable		0 ~ 1	0	

GROUP	NO.	ITEM	FUNCTION	RANGE	INITIAL VALUE	NOTE
	10	FLDBEG		0 ~ 15	0	
	11	FLDEND		0 ~ 15	0	
580		RGB Video (1080P - 50)	[5BNC Card]			
	0	Total Dots		0 ~ 3000	1878	
	1	Disp Dots		0 ~ 3000	1362	
	2	H Back Porch		0 ~ 3000	160	
	3	V Back Porch		0 ~ 3000	41	
	4	Disp Line		0 ~ 1500	1080	
	8	VSBEG		0 ~ 15	2	
	9	Filed Enable		0 ~ 1	0	
	10	FLDBEG		0 ~ 15	0	
	11	FLDEND		0 ~ 15	0	
582		RGB Video (1080P - 30)	[5BNC Card]			
	0	Total Dots		0 ~ 3000	1565	
	1	Disp Dots		0 ~ 3000	1362	
	2	H Back Porch		0 ~ 3000	160	
	3	V Back Porch		0 ~ 3000	41	
	4	Disp Line		0 ~ 1500	1080	
	8	VSBEG		0 ~ 15	2	
	9	Filed Enable		0 ~ 1	0	
	10	FLDBEG		0 ~ 15	0	
	11	FLDEND		0 ~ 15	0	
583		RGB Video (1080P - 25)	[5BNC Card]			
	0	Total Dots		0 ~ 3000	1878	
	1	Disp Dots		0 ~ 3000	1362	
	2	H Back Porch		0 ~ 3000	160	
	3	V Back Porch		0 ~ 3000	41	
	4	Disp Line		0 ~ 1500	1080	
	8	VSBEG		0 ~ 15	2	
	9	Filed Enable		0 ~ 1	0	
	10	FLDBEG		0 ~ 15	0	
	11	FLDEND		0 ~ 15	0	
584		RGB Video (1080P - 48)	[5BNC Card]			
	0	Total Dots		0 ~ 3000	1957	
	1	Disp Dots		0 ~ 3000	1362	
	2	H Back Porch		0 ~ 3000	160	
	3	V Back Porch		0 ~ 3000	41	
	4	Disp Line		0 ~ 1500	1080	
	8	VSBEG		0 ~ 15	2	
	9	Filed Enable		0 ~ 1	0	
	10	FLDBEG		0 ~ 15	0	
	11	FLDEND		0 ~ 15	0	
585		RGB Video (1080 - 30psf)	[5BNC Card]			
	0	Total Dots		0 ~ 3000	2200	
	1	Disp Dots		0 ~ 3000	1910	
	2	H Back Porch		0 ~ 3000	220	
	3	V Back Porch		0 ~ 3000	40	
	4	Disp Line		0 ~ 1500	1080	
	8	VSBEG		0 ~ 15	2	
	9	Filed Enable		0 ~ 1	0	
	10	FLDBEG		0 ~ 15	0	
	11	FLDEND		0 ~ 15	0	
586		RGB Video (1080 - 25psf)	[5BNC Card]			
	0	Total Dots		0 ~ 3000	2640	
	1	Disp Dots		0 ~ 3000	1916	
	2	H Back Porch		0 ~ 3000	216	
	3	V Back Porch		0 ~ 3000	40	
	4	Disp Line		0 ~ 1500	1080	
	8	VSBEG		0 ~ 15	2	
	9	Filed Enable		0 ~ 1	0	
	10	FLDBEG		0 ~ 15	0	
	11	FLDEND		0 ~ 15	0	
587		RGB Video (1080 - 24psf)	[5BNC Card]			
	0	Total Dots		0 ~ 3000	2750	
	1	Disp Dots		0 ~ 3000	1914	
	2	H Back Porch		0 ~ 3000	218	
	3	V Back Porch		0 ~ 3000	40	
	4	Disp Line		0 ~ 1500	1080	
	8	VSBEG		0 ~ 15	2	
	9	Filed Enable		0 ~ 1	0	
	10	FLDBEG		0 ~ 15	0	
	11	FLDEND		0 ~ 15	0	
600		PW Option				
	0	Flame Lock Option	0 : Frame Lock OFF / 1 : Frame Lock ON	0 ~ 1	1	

Electrical Adjustment

GROUP	NO.	ITEM	FUNCTION	RANGE	INITIAL VALUE	NOTE
	1	AV Screen Force True Mode	Change Natural Wide --> True (0 : disable / 1 : Enable)	0 ~ 1	0	
	2	Field Sense Invert Enable	0 : Disable / 1 : Enable	0 ~ 1	0	
	6	Device Referesh Disable	0 : Enable / 1 : Disable	0 ~ 1	0	
	12	VSBEG	Setting PC - Analog / Digital	0 ~ 15	2	
601		Simulation (Not used)				
	0	Simulation	0 : Disable / 1 : Enable	0 ~ 1	0x00	
	1	Display Line Deley		0 ~ 4095	400	
605		Spread Spectrum				
	0	Enable	0 : OFF / 1 : ON	0 ~ 1	1	
	1	Spread Spectrum		0 ~ 300	200	
	2	Modulation		1 ~ 500	80	
620		Sub Image				
	0	Center Contrast	Composite / S-Video / Component / Digital / D-RGB-Video / Analog RGB /RGB-Video / HDCP-PC / HDCP-AV / SCRAT / PJ-Net	0 ~ 1023	577/577/578/492/492/535 /577/492/492/572/492	
	1	Center Brightness		0 ~ 1023	512/512/512/512/512/512 /512/512/512/512/512	
	2	Center Color		0 ~ 1023	512/512/512/512/512/512 /512/512/512/512/512	
	3	Center Tint		0 ~ 1023	90/90/90/90/90/90 /90/90/90/90/90	
	4	Center Sharpness		0 ~ 1023	9/9/9/7/9/7 /9/7/9/9/7	
	5	Center White Balance - Red		0 ~ 1023	512/512/512/512/512/512 /512/512/512/512/512	
	6	Center White Balance - Green		0 ~ 1023	512/512/512/512/512/512 /512/512/512/512/512	
	7	Center White Balance - Blue		0 ~ 1023	512/512/512/512/512/512 /512/512/512/512/512	
	8	Center Black Balance - Red		0 ~ 1023	512/512/512/512/512/512 /512/512/512/512/512	
	9	Center Black Balance - Green		0 ~ 1023	512/512/512/512/512/512 /512/512/512/512/512	
	10	Center Black Balance - Blue		0 ~ 1023	512/512/512/512/512/512 /512/512/512/512/512	
	11	Alpha Contrast		0 ~ 1023	120/120/120/120/120/120 /120/120/120/120/120	
	12	Alpha Brightness		0 ~ 1023	120/120/120/120/120/120 /120/120/120/120/120	
	13	Alpha Color		0 ~ 1023	120/120/120/120/120/120 /120/120/120/120/120	
	14	Alpha Tint		0 ~ 1023	10/10/10/10/10/10 /10/10/10/10/10	
	15	Alpha White Balance -Red		0 ~ 500	40/40/40/40/40/40 /40/40/40/40/40	
	16	Alpha White Balance -Green		0 ~ 500	40/40/40/40/40/40 /40/40/40/40/40	
	17	Alpha White Balance -Blue		0 ~ 500	40/40/40/40/40/40 /40/40/40/40/40	
	18	Alpha Black Balance -Red		0 ~ 500	20/20/20/20/20/20 /20/20/20/20/20	
	19	Alpha Black Balance -Green		0 ~ 500	20/20/20/20/20/20 /20/20/20/20/20	
	20	Alpha Black Balance -Blue		0 ~ 500	20/20/20/20/20/20 /20/20/20/20/20	
660		Auto Calibration (Common)				
	0	Execute Calibration	Execute auto calibration when the data is set to 1.	0 ~ 1	0	* Gain Adjustment
	1	Loop Count		1 ~ 30	10	
	2	Auto Status	Read Only	0 / 1 / 9	0	
	3	Auto Wait		1 ~ 20	1	
	4	CHECK - Tolerance		1 ~ 255	8	
661		Auto Calibration (RGB)				
	0	OFFSET AREA H START	Black Level H (Unused)	0 ~ 1000	975	
	1	OFFSET AREA V START	Black Level V (Unused)	0 ~ 1000	500	
	2	GAIN AREA H START	White Level H	0 ~ 1000	25	
	3	GAIN AREA V START	White Level V	0 ~ 1000	500	
	4	ImageAREA H WIDTH	Black / White Level H	0 ~ 4095	13	
	5	ImageAREA V HIGHT	Black / White Level V	0 ~ 4095	9	
	6	OFFSET target	Black Level (Unused)	0 ~ 1023	12	
	7	OFFSET torelance	Black Level (Unused)	0 ~ 1023	4	
	8	GAIN target	White Level	0 ~ 1023	941	
	9	GAIN torelance	White Level	0 ~ 1023	4	
662		Auto Calibration (CVBS)				
	0	Y - OFFSET AREA H START	Y-Offset Area H Start (Unused)	0 ~ 1000	925	
	1	Y - OFFSET AREA V START	Y-Offset Area V Start (Unused)	0 ~ 1000	500	
	2	CB - OFFSET AREA H START	CB-Offset Area H Start (Unused)	0 ~ 1000	925	
	3	CB - OFFSET AREA V START	CB-Offset Area V Start (Unused)	0 ~ 1000	500	

GROUP	NO.	ITEM	FUNCTION	RANGE	INITIAL VALUE	NOTE
	4	CR - OFFSET AREA H START	CR-Offset Area H Start (Unused)	0 ~ 1000	925	
	5	CB - OFFSET AREA V START	CB-Offset Area V Start (Unused)	0 ~ 1000	500	
	6	Y - GAIN AREA H START	Y-Gain Area H Start	0 ~ 1000	40	
	7	Y - GAIN AREA V START	Y-Gain Area V Start	0 ~ 1000	495	
	8	CB - GAIN AREA H START	CB-Gain Area H Start	0 ~ 1000	820	
	9	CB - GAIN AREA V START	CB-Gain Area V Start	0 ~ 1000	495	
	10	CR - GAIN AREA H START	CR-Gain Area H Start	0 ~ 1000	690	
	11	CB - GAIN AREA V START	CB-Gain Area V Start	0 ~ 1000	495	
	12	Image AREA H WIDTH	YCBCR Level Area H	0 ~ 4095	13	
	13	Image AREA V HIGHT	YCBCR Level Area V	0 ~ 4095	9	
	14	Y - OFFSET TARGET	Y-Offset target (Unused)	0 ~ 1023	0	
	15	CB - OFFSET TARGET	CB-Offset target (Unused)	0 ~ 1023	512	
	16	CR - OFFSET TARGET	CR-Offset target (Unused)	0 ~ 1023	512	
	17	Y - GAIN TARGET	Y-Gaint target	0 ~ 1023	870	
	18	CB - GAIN TARGET	CB-Gaint target	0 ~ 1023	947	
	19	CR - GAIN TARGET	CR-Gaint target	0 ~ 1023	947	
	20	OFFSET tolerance	Offset tolerance	0 ~ 1023	1	
	21	GAIN tolerance	Offset tolerance	0 ~ 1023	1	
664		Auto Calibration (YCbCr)				
	0	Y - OFFSET AREA H START	Y-Offset Area H Start (Unused)	0 ~ 1000	925	
	1	Y - OFFSET AREA V START	Y-Offset Area V Start (Unused)	0 ~ 1000	500	
	2	CB - OFFSET AREA H START	CB-Offset Area H Start (Unused)	0 ~ 1000	925	
	3	CB - OFFSET AREA V START	CB-Offset Area V Start (Unused)	0 ~ 1000	500	
	4	CR - OFFSET AREA H START	CR-Offset Area H Start (Unused)	0 ~ 1000	925	
	5	CB - OFFSET AREA V START	CB-Offset Area V Start (Unused)	0 ~ 1000	500	
	6	Y - GAIN AREA H START	Y-Gain Area H Start	0 ~ 1000	40	
	7	Y - GAIN AREA V START	Y-Gain Area V Start	0 ~ 1000	495	
	8	CB - GAIN AREA H START	CB-Gain Area H Start	0 ~ 1000	820	
	9	CB - GAIN AREA V START	CB-Gain Area V Start	0 ~ 1000	495	
	10	CR - GAIN AREA H START	CR-Gain Area H Start	0 ~ 1000	690	
	11	CR - GAIN AREA V START	CB-Gain Area V Start	0 ~ 1000	495	
	12	Image AREA H WIDTH	YCBCR Level Area H	0 ~ 4095	13	
	13	Image AREA V HIGHT	YCBCR Level Area V	0 ~ 4095	9	
	14	Y - OFFSET TARGET	Y-Offset target (Unused)	0 ~ 1023	0	
	15	CB - OFFSET TARGET	CB-Offset target (Unused)	0 ~ 1023	512	
	16	CR - OFFSET TARGET	CR-Offset target (Unused)	0 ~ 1023	512	
	17	Y - GAIN TARGET	Y-Gaint target	0 ~ 1023	870	
	18	CB - GAIN TARGET	CB-Gaint target	0 ~ 1023	947	
	19	CR - GAIN TARGET	CR-Gaint target	0 ~ 1023	947	
	20	OFFSET tolerance	Offset tolerance	0 ~ 1023	1	
	21	GAIN tolerance	Offset tolerance	0 ~ 1023	1	
680		Auto PC Adjust				
	0	Auto PC Adjust Enable	0 : Enable / 1 : Disable	0 ~ 1	0	
	1	Frequency Step		0 ~ 3	1	
	2	Frequency Threshold		0 ~ 10	5	
	3	Fine Phase	0 : Execute / 1 : Unexecute	0 ~ 1	0	
	4	BLKDET	BlacK Level Detect Area	0 ~ 3	1	
	5	PHASEMSK	0 : Full bit Enable / 1: 1 last bit disable/ 2 : 2 last bit disable / 3 : 3 last bit Enable	0 ~ 3	0	
700		General				
	0	IP Mode	Setting IP OFF (0 : IP Block Unused / 1 : IP Block used and IP OFF)	0 ~ 1	1	
	1	3:2 Pull Down Mode	Bit0 : Gloobal Mode / Bit1 : Video Mode	1 ~ 3	1	
	2	Detect Film Mode Enable	0 : 2:3 pull down & 2:2 pull down / 1 : 2:3 pull down / 2 : 2:2 pull down	0 ~ 2	0	
	3	Force IP Mode	0 : IP Process Disable / 1 : Force Normal IP Mode / 2 : Force Film Mode	0 ~ 2	2	
701		De-interlace setting	Only Enable Progressive ON / Film			
	0	Motion Adaptive Weight Value	< KDEINT >	0 ~ 255	25	
	1	Angle Interpolation Level	0 : Conservation < ==== > 4 : Aggressive	0 ~ 4	2	
	2	Cue Low Pass Filter Enable	< CUELPFEN >	0 ~ 1	0	
711		Noise Reduction	Only Enable N.R L1			
	0	Noise Pixel Range	< NSRANGEY > / <NSRANGEUV>	0 ~ 2	1	
	1	Noise Region 0	< NSRGIONY0 > / <NSRGIONUV0>	0 ~ 1023	12	
	2	Noise Region 1	< NSRGIONY1 > / <NSRGIONUV1>	0 ~ 1023	24	
	3	Noise Region 2	< NSRGIONY2 > / <NSRGIONUV2>	0 ~ 1023	40	
	4	Noise Gain Level	< NSFILTERY** > / <NSFILTERUV**>	0 ~ 255	100	
715		Noise Reduction	Only Enable N.R OFF			
	0	Noise Pixel Range	< NSRANGEY > / <NSRANGEUV>	0 ~ 2	1	
	1	Noise Region 0	< NSRGIONY0 > / <NSRGIONUV0>	0 ~ 1023	12	
	2	Noise Region 1	< NSRGIONY1 > / <NSRGIONUV1>	0 ~ 1023	24	
	3	Noise Region 2	< NSRGIONY2 > / <NSRGIONUV2>	0 ~ 1023	40	
	4	Noise Gain Level	< NSFILTERY** > / <NSFILTERUV**>	0 ~ 1023	1	
720		2:2 pull down setting				
	0	22 Film Mode Sensitivity	Film Detection Sensitivity <FILMSTVT22>	1 ~ 5	4	

GROUP	NO.	ITEM	FUNCTION	RANGE	INITIAL VALUE	NOTE
	1	22 Film Mode Threshold Low	<FILMTHRD22A>	1 ~ 32767	80	
	2	22 Film Mode Threshold High	<FILMTHRD22B>	1 ~ 32767	120	
	3	VOFTHR13	<VOFTHR13> Read Only	0 ~ 1023	124	
	4	VOFTHR12	<VOFTHR12> Read Only	0 ~ 1023	124	
	5	VOFTHR23	<VOFTHR23> Read Only	0 ~ 1023	124	
	6	Video Motion Window Start X	<VOFSTARX>	0 ~ 2047	10	
	7	Video Motion Window Stop X	<VOFSTOPX>	0 ~ 2047	10	
	8	Video Motion Window Start Y	<VOFSTARY>	0 ~ 1023	10	
	9	Video Motion Window Stop Y	<VOFSTOPY>	0 ~ 1023	10	
721		2:3 pull down setting				
	0	Global Motion Sensitivity	Film Detection Sensitivity <FILMSTVT23>	1 ~ 5	4	
	1	Video Motion Sensitivity	Film Detection Sensitivity <VOFSTVT>	1 ~ 5	4	
	2	Video Motion Threshold Low	<VOFTHRDA>	0 ~ 32767	120	
	3	Video Motion Threshold High	<VOFTHRDB>	0 ~ 32767	180	
	4	Global Motion Threshold	<GMDTHRD> Read Only	0 ~ 1024	124	
	5	23 Film Mode Threshold	<FILMTHRD23>	0 ~ 32767	100	
	6	Global Motion Window Start X	<GMDSTARX>	0 ~ 2047	10	
	7	Global Motion Window Stop X	<GMDSTOPX>	0 ~ 2047	10	
	8	Global Motion Window Start Y	<GMDSTARY>	0 ~ 1023	10	
	9	Global Motion Window Stop Y	<GMDSTOPY>	0 ~ 1023	10	
800		SCART (480i)	On Board (DVI-Dsub)			
	0	Total Dots		0 ~ 3000	1292	
	1	Disp Dots		0 ~ 3000	1024	
	2	H Bck Porch		0 ~ 3000	191	
	3	V Back Porch		0 ~ 3000	42	
	4	Disp Line		0 ~ 1500	468	
	8	VS BEG		0 ~ 15	2	
	9	Field Enable		0 ~ 1	1	
	10	FLDBEG		0 ~ 15	7	
	11	FLDEND		0 ~ 15	13	
801		SCART (575i)	On Board (DVI-Dsub)			
	0	Total Dots		0 ~ 3000	1332	
	1	Disp Dots		0 ~ 3000	1024	
	2	H Bck Porch		0 ~ 3000	220	
	3	V Back Porch		0 ~ 3000	57	
	4	Disp Line		0 ~ 1500	552	
	8	VS BEG		0 ~ 15	2	
	9	Field Enable		0 ~ 1	1	
	10	FLDBEG		0 ~ 15	7	
	11	FLDEND		0 ~ 15	13	
810		RGB Video (480i)	On Board (DVI-Dsub)			
	0	Total Dots		0 ~ 3000	1292	
	1	Disp Dots		0 ~ 3000	1024	
	2	H Bck Porch		0 ~ 3000	190	
	3	V Back Porch		0 ~ 3000	42	
	4	Disp Line		0 ~ 1500	468	
	8	VS BEG		0 ~ 15	1	
	9	Field Enable		0 ~ 1	1	
	10	FLDBEG		0 ~ 15	1	
	11	FLDEND		0 ~ 15	9	
811		RGB Video (575i)	On Board (DVI-Dsub)			
	0	Total Dots		0 ~ 3000	1322	
	1	Disp Dots		0 ~ 3000	1024	
	2	H Bck Porch		0 ~ 3000	217	
	3	V Back Porch		0 ~ 3000	56	
	4	Disp Line		0 ~ 1500	552	
	8	VS BEG		0 ~ 15	1	
	9	Field Enable		0 ~ 1	1	
	10	FLDBEG		0 ~ 15	1	
	11	FLDEND		0 ~ 15	9	
812		RGB Video (480P)	On Board (DVI-Dsub)			
	0	Total Dots		0 ~ 3000	1245	
	1	Disp Dots		0 ~ 3000	1024	
	2	H Bck Porch		0 ~ 3000	168	
	3	V Back Porch		0 ~ 3000	39	
	4	Disp Line		0 ~ 1500	476	
	8	VS BEG		0 ~ 15	2	
	9	Field Enable		0 ~ 1	0	
	10	FLDBEG		0 ~ 15	0	
	11	FLDEND		0 ~ 15	0	
813		RGB Video (575P)	On Board (DVI-Dsub)			
	0	Total Dots		0 ~ 3000	1278	
	1	Disp Dots		0 ~ 3000	1024	
	2	H Bck Porch		0 ~ 3000	199	
	3	V Back Porch		0 ~ 3000	49	

GROUP	NO.	ITEM	FUNCTION	RANGE	INITIAL VALUE	NOTE
	4	Disp Line		0 ~ 1500	550	
	8	VS BEG		0 ~ 15	2	
	9	Field Enable		0 ~ 1	0	
	10	FLDBEG		0 ~ 15	0	
	11	FLDEND		0 ~ 15	0	
814		RGB Video (720P-60)	On Board (DVI-Dsub)			
	0	Total Dots		0 ~ 3000	1650	
	1	Disp Dots		0 ~ 3000	1270	
	2	H Bck Porch		0 ~ 3000	284	
	3	V Back Porch		0 ~ 3000	26	
	4	Disp Line		0 ~ 1500	719	
	8	VS BEG		0 ~ 15	2	
	9	Field Enable		0 ~ 1	0	
	10	FLDBEG		0 ~ 15	0	
	11	FLDEND		0 ~ 15	0	
815		RGB Video (720P-50)	On Board (DVI-Dsub)			
	0	Total Dots		0 ~ 3000	1980	
	1	Disp Dots		0 ~ 3000	1270	
	2	H Bck Porch		0 ~ 3000	280	
	3	V Back Porch		0 ~ 3000	27	
	4	Disp Line		0 ~ 1500	719	
	8	VS BEG		0 ~ 15	2	
	9	Field Enable		0 ~ 1	0	
	10	FLDBEG		0 ~ 15	0	
	11	FLDEND		0 ~ 15	0	
816		RGB Video (1080i-60)	On Board (DVI-Dsub)			
	0	Total Dots		0 ~ 3000	2200	
	1	Disp Dots		0 ~ 3000	1910	
	2	H Bck Porch		0 ~ 3000	219	
	3	V Back Porch		0 ~ 3000	40	
	4	Disp Line		0 ~ 1500	1080	
	8	VS BEG		0 ~ 15	1	
	9	Field Enable		0 ~ 1	1	
	10	FLDBEG		0 ~ 15	2	
	11	FLDEND		0 ~ 15	9	
817		RGB Video (1035i)	On Board (DVI-Dsub)			
	0	Total Dots		0 ~ 3000	2200	
	1	Disp Dots		0 ~ 3000	1852	
	2	H Bck Porch		0 ~ 3000	247	
	3	V Back Porch		0 ~ 3000	92	
	4	Disp Line		0 ~ 1500	1010	
	8	VS BEG		0 ~ 15	1	
	9	Field Enable		0 ~ 1	1	
	10	FLDBEG		0 ~ 15	2	
	11	FLDEND		0 ~ 15	9	
818		RGB Video (1080i-50)	On Board (DVI-Dsub)			
	0	Total Dots		0 ~ 3000	2640	
	1	Disp Dots		0 ~ 3000	1914	
	2	H Bck Porch		0 ~ 3000	218	
	3	V Back Porch		0 ~ 3000	40	
	4	Disp Line		0 ~ 1500	1082	
	8	VS BEG		0 ~ 15	1	
	9	Field Enable		0 ~ 1	1	
	10	FLDBEG		0 ~ 15	2	
	11	FLDEND		0 ~ 15	9	
819		RGB Video (1080P-60)	On Board (DVI-Dsub)			
	0	Total Dots		0 ~ 3000	1565	
	1	Disp Dots		0 ~ 3000	1362	
	2	H Bck Porch		0 ~ 3000	160	
	3	V Back Porch		0 ~ 3000	41	
	4	Disp Line		0 ~ 1500	1080	
	8	VS BEG		0 ~ 15	2	
	9	Field Enable		0 ~ 1	0	
	10	FLDBEG		0 ~ 15	0	
	11	FLDEND		0 ~ 15	0	
820		RGB Video (575i)1080P-50	On Board (DVI-Dsub)			
	0	Total Dots		0 ~ 3000	1878	
	1	Disp Dots		0 ~ 3000	1362	
	2	H Bck Porch		0 ~ 3000	160	
	3	V Back Porch		0 ~ 3000	41	
	4	Disp Line		0 ~ 1500	1080	
	8	VS BEG		0 ~ 15	2	
	9	Field Enable		0 ~ 1	0	
	10	FLDBEG		0 ~ 15	0	

GROUP	NO.	ITEM	FUNCTION	RANGE	INITIAL VALUE	NOTE
	11	FLDEND		0 ~ 15	0	
822		RGB Video (1080P-30)	On Board (DVI-Dsub)			
	0	Total Dots		0 ~ 3000	1565	
	1	Disp Dots		0 ~ 3000	1362	
	2	H Bck Porch		0 ~ 3000	160	
	3	V Back Porch		0 ~ 3000	41	
	4	Disp Line		0 ~ 1500	1080	
	8	VS BEG		0 ~ 15	2	
	9	Field Enable		0 ~ 1	0	
	10	FLDBEG		0 ~ 15	0	
	11	FLDEND		0 ~ 15	0	
823		RGB Video (1080P-25)	On Board (DVI-Dsub)			
	0	Total Dots		0 ~ 3000	1878	
	1	Disp Dots		0 ~ 3000	1362	
	2	H Bck Porch		0 ~ 3000	160	
	3	V Back Porch		0 ~ 3000	41	
	4	Disp Line		0 ~ 1500	1080	
	8	VS BEG		0 ~ 15	2	
	9	Field Enable		0 ~ 1	0	
	10	FLDBEG		0 ~ 15	0	
	11	FLDEND		0 ~ 15	0	
824		RGB Video (1080P-24)	On Board (DVI-Dsub)			
	0	Total Dots		0 ~ 3000	1957	
	1	Disp Dots		0 ~ 3000	1362	
	2	H Bck Porch		0 ~ 3000	160	
	3	V Back Porch		0 ~ 3000	41	
	4	Disp Line		0 ~ 1500	1080	
	8	VS BEG		0 ~ 15	2	
	9	Field Enable		0 ~ 1	0	
	10	FLDBEG		0 ~ 15	0	
	11	FLDEND		0 ~ 15	0	
825		RGB Video (1080-30psf)	On Board (DVI-Dsub)			
	0	Total Dots		0 ~ 3000	2200	
	1	Disp Dots		0 ~ 3000	1910	
	2	H Bck Porch		0 ~ 3000	219	
	3	V Back Porch		0 ~ 3000	40	
	4	Disp Line		0 ~ 1500	1080	
	8	VS BEG		0 ~ 15	2	
	9	Field Enable		0 ~ 1	0	
	10	FLDBEG		0 ~ 15	0	
	11	FLDEND		0 ~ 15	0	
826		RGB Video (1080-25psf)	On Board (DVI-Dsub)			
	0	Total Dots		0 ~ 3000	2640	
	1	Disp Dots		0 ~ 3000	1916	
	2	H Bck Porch		0 ~ 3000	216	
	3	V Back Porch		0 ~ 3000	40	
	4	Disp Line		0 ~ 1500	1080	
	8	VS BEG		0 ~ 15	2	
	9	Field Enable		0 ~ 1	0	
	10	FLDBEG		0 ~ 15	0	
	11	FLDEND		0 ~ 15	0	
827		RGB Video (1080-24psf)	On Board (DVI-Dsub)			
	0	Total Dots		0 ~ 3000	2750	
	1	Disp Dots		0 ~ 3000	1914	
	2	H Bck Porch		0 ~ 3000	216	
	3	V Back Porch		0 ~ 3000	40	
	4	Disp Line		0 ~ 1500	1080	
	8	VS BEG		0 ~ 15	2	
	9	Field Enable		0 ~ 1	0	
	10	FLDBEG		0 ~ 15	0	
	11	FLDEND		0 ~ 15	0	
830		Composite / S-Video (NTSC)	On Board (5BNC-Video)			
	0	Total Dots		0 ~ 3000	1315	
	1	Disp Dots		0 ~ 3000	1024	
	2	H Bck Porch		0 ~ 3000	194	
	3	V Back Porch		0 ~ 3000	48	
	4	Disp Line		0 ~ 1500	456	
	8	VS BEG		0 ~ 15	1	
	9	Field Enable		0 ~ 1	1	
	10	FLDBEG		0 ~ 15	0	
	11	FLDEND		0 ~ 15	6	
831		Composite / S-Video (PAL)	On Board (5BNC-Video)			
	0	Total Dots		0 ~ 3000	1349	
	1	Disp Dots		0 ~ 3000	1024	

GROUP	NO.	ITEM	FUNCTION	RANGE	INITIAL VALUE	NOTE
	2	H Bck Porch		0 ~ 3000	227	
	3	V Back Porch		0 ~ 3000	63	
	4	Disp Line		0 ~ 1500	534	
	8	VS BEG		0 ~ 15	2	
	9	Field Enable		0 ~ 1	1	
	10	FLDBEG		0 ~ 15	7	
	11	FLDEND		0 ~ 15	13	
840		YCbCr (480i)	On Board (5BNC-Video)			
	0	Total Dots		0 ~ 3000	1292	
	1	Disp Dots		0 ~ 3000	1024	
	2	H Bck Porch		0 ~ 3000	199	
	3	V Back Porch		0 ~ 3000	42	
	4	Disp Line		0 ~ 1500	468	
	8	VS BEG		0 ~ 15	1	
	9	Field Enable		0 ~ 1	1	
	10	FLDBEG		0 ~ 15	0	
	11	FLDEND		0 ~ 15	6	
841		YCbCr (575i)	On Board (5BNC-Video)			
	0	Total Dots		0 ~ 3000	1322	
	1	Disp Dots		0 ~ 3000	1024	
	2	H Bck Porch		0 ~ 3000	225	
	3	V Back Porch		0 ~ 3000	56	
	4	Disp Line		0 ~ 1500	552	
	8	VS BEG		0 ~ 15	1	
	9	Field Enable		0 ~ 1	1	
	10	FLDBEG		0 ~ 15	0	
	11	FLDEND		0 ~ 15	6	
842		YCbCr (480P)	On Board (5BNC-Video)			
	0	Total Dots		0 ~ 3000	1245	
	1	Disp Dots		0 ~ 3000	1024	
	2	H Bck Porch		0 ~ 3000	170	
	3	V Back Porch		0 ~ 3000	38	
	4	Disp Line		0 ~ 1500	475	
	8	VS BEG		0 ~ 15	2	
	9	Field Enable		0 ~ 1	0	
	10	FLDBEG		0 ~ 15	0	
	11	FLDEND		0 ~ 15	0	
843		YCbCr (575P)	On Board (5BNC-Video)			
	0	Total Dots		0 ~ 3000	1278	
	1	Disp Dots		0 ~ 3000	1024	
	2	H Bck Porch		0 ~ 3000	201	
	3	V Back Porch		0 ~ 3000	48	
	4	Disp Line		0 ~ 1500	550	
	8	VS BEG		0 ~ 15	2	
	9	Field Enable		0 ~ 1	0	
	10	FLDBEG		0 ~ 15	0	
	11	FLDEND		0 ~ 15	0	
844		YCbCr (720P-60)	On Board (5BNC-Video)			
	0	Total Dots		0 ~ 3000	1650	
	1	Disp Dots		0 ~ 3000	1270	
	2	H Bck Porch		0 ~ 3000	287	
	3	V Back Porch		0 ~ 3000	25	
	4	Disp Line		0 ~ 1500	720	
	8	VS BEG		0 ~ 15	2	
	9	Field Enable		0 ~ 1	0	
	10	FLDBEG		0 ~ 15	0	
	11	FLDEND		0 ~ 15	0	
845		YCbCr (720P-50)	On Board (5BNC-Video)			
	0	Total Dots		0 ~ 3000	1980	
	1	Disp Dots		0 ~ 3000	1270	
	2	H Bck Porch		0 ~ 3000	283	
	3	V Back Porch		0 ~ 3000	26	
	4	Disp Line		0 ~ 1500	719	
	8	VS BEG		0 ~ 15	2	
	9	Field Enable		0 ~ 1	0	
	10	FLDBEG		0 ~ 15	0	
	11	FLDEND		0 ~ 15	0	
846		YCbCr (1080i-60)	On Board (5BNC-Video)			
	0	Total Dots		0 ~ 3000	2200	
	1	Disp Dots		0 ~ 3000	1910	
	2	H Bck Porch		0 ~ 3000	220	
	3	V Back Porch		0 ~ 3000	38	
	4	Disp Line		0 ~ 1500	1082	
	8	VS BEG		0 ~ 15	2	
	9	Field Enable		0 ~ 1	1	

GROUP	NO.	ITEM	FUNCTION	RANGE	INITIAL VALUE	NOTE
	10	FLDBEG		0 ~ 15	3	
	11	FLDEND		0 ~ 15	9	
847		YCbCr (1035i)	On Board (5BNC-Video)			
	0	Total Dots		0 ~ 3000	2200	
	1	Disp Dots		0 ~ 3000	1854	
	2	H Bck Porch		0 ~ 3000	248	
	3	V Back Porch		0 ~ 3000	90	
	4	Disp Line		0 ~ 1500	1010	
	8	VS BEG		0 ~ 15	2	
	9	Field Enable		0 ~ 1	1	
	10	FLDBEG		0 ~ 15	3	
	11	FLDEND		0 ~ 15	9	
848		YCbCr (1080i-50)	On Board (5BNC-Video)			
	0	Total Dots		0 ~ 3000	2640	
	1	Disp Dots		0 ~ 3000	1918	
	2	H Bck Porch		0 ~ 3000	218	
	3	V Back Porch		0 ~ 3000	39	
	4	Disp Line		0 ~ 1500	1081	
	8	VS BEG		0 ~ 15	2	
	9	Field Enable		0 ~ 1	1	
	10	FLDBEG		0 ~ 15	3	
	11	FLDEND		0 ~ 15	9	
849		YCbCr (1080P-60)	On Board (5BNC-Video)			
	0	Total Dots		0 ~ 3000	1565	
	1	Disp Dots		0 ~ 3000	1362	
	2	H Bck Porch		0 ~ 3000	160	
	3	V Back Porch		0 ~ 3000	41	
	4	Disp Line		0 ~ 1500	1080	
	8	VS BEG		0 ~ 15	2	
	9	Field Enable		0 ~ 1	0	
	10	FLDBEG		0 ~ 15	0	
	11	FLDEND		0 ~ 15	0	
850		YCbCr (1080P-50)	On Board (5BNC-Video)			
	0	Total Dots		0 ~ 3000	1878	
	1	Disp Dots		0 ~ 3000	1362	
	2	H Bck Porch		0 ~ 3000	160	
	3	V Back Porch		0 ~ 3000	41	
	4	Disp Line		0 ~ 1500	1080	
	8	VS BEG		0 ~ 15	2	
	9	Field Enable		0 ~ 1	0	
	10	FLDBEG		0 ~ 15	0	
	11	FLDEND		0 ~ 15	0	
852		YCbCr (1080P-30)	On Board (5BNC-Video)			
	0	Total Dots		0 ~ 3000	1565	
	1	Disp Dots		0 ~ 3000	1362	
	2	H Bck Porch		0 ~ 3000	160	
	3	V Back Porch		0 ~ 3000	41	
	4	Disp Line		0 ~ 1500	1080	
	8	VS BEG		0 ~ 15	2	
	9	Field Enable		0 ~ 1	0	
	10	FLDBEG		0 ~ 15	0	
	11	FLDEND		0 ~ 15	0	
853		YCbCr (1080P-25)	On Board (5BNC-Video)			
	0	Total Dots		0 ~ 3000	1878	
	1	Disp Dots		0 ~ 3000	1362	
	2	H Bck Porch		0 ~ 3000	160	
	3	V Back Porch		0 ~ 3000	41	
	4	Disp Line		0 ~ 1500	1080	
	8	VS BEG		0 ~ 15	2	
	9	Field Enable		0 ~ 1	0	
	10	FLDBEG		0 ~ 15	0	
	11	FLDEND		0 ~ 15	0	
854		YCbCr (1080P-24)	On Board (5BNC-Video)			
	0	Total Dots		0 ~ 3000	1957	
	1	Disp Dots		0 ~ 3000	1362	
	2	H Bck Porch		0 ~ 3000	160	
	3	V Back Porch		0 ~ 3000	41	
	4	Disp Line		0 ~ 1500	1080	
	8	VS BEG		0 ~ 15	2	
	9	Field Enable		0 ~ 1	0	
	10	FLDBEG		0 ~ 15	0	
	11	FLDEND		0 ~ 15	0	
855		YCbCr (1080-30psf)	On Board (5BNC-Video)			
	0	Total Dots		0 ~ 3000	2200	

GROUP	NO.	ITEM	FUNCTION	RANGE	INITIAL VALUE	NOTE
	1	Disp Dots		0 ~ 3000	1874	
	2	H Bck Porch		0 ~ 3000	220	
	3	V Back Porch		0 ~ 3000	54	
	4	Disp Line		0 ~ 1500	1050	
	8	VS BEG		0 ~ 15	2	
	9	Field Enable		0 ~ 1	0	
	10	FLDBEG		0 ~ 15	0	
	11	FLDEND		0 ~ 15	0	
856		YCbCr (1080-25psf)	On Board (5BNC-Video)			
	0	Total Dots		0 ~ 3000	2640	
	1	Disp Dots		0 ~ 3000	1874	
	2	H Bck Porch		0 ~ 3000	220	
	3	V Back Porch		0 ~ 3000	54	
	4	Disp Line		0 ~ 1500	1050	
	8	VS BEG		0 ~ 15	2	
	9	Field Enable		0 ~ 1	0	
	10	FLDBEG		0 ~ 15	0	
	11	FLDEND		0 ~ 15	0	
857		YCbCr (1080-24psf)	On Board (5BNC-Video)			
	0	Total Dots		0 ~ 3000	2750	
	1	Disp Dots		0 ~ 3000	1874	
	2	H Bck Porch		0 ~ 3000	254	
	3	V Back Porch		0 ~ 3000	54	
	4	Disp Line		0 ~ 1500	1050	
	8	VS BEG		0 ~ 15	2	
	9	Field Enable		0 ~ 1	0	
	10	FLDBEG		0 ~ 15	0	
	11	FLDEND		0 ~ 15	0	
860		RGB Video (480i)	On Board (5BNC-Video)			
	0	Total Dots		0 ~ 3000	1292	
	1	Disp Dots		0 ~ 3000	1024	
	2	H Bck Porch		0 ~ 3000	198	
	3	V Back Porch		0 ~ 3000	44	
	4	Disp Line		0 ~ 1500	468	
	8	VS BEG		0 ~ 15	1	
	9	Field Enable		0 ~ 1	1	
	10	FLDBEG		0 ~ 15	2	
	11	FLDEND		0 ~ 15	9	
861		RGB Video (575i)	On Board (5BNC-Video)			
	0	Total Dots		0 ~ 3000	1322	
	1	Disp Dots		0 ~ 3000	1024	
	2	H Bck Porch		0 ~ 3000	223	
	3	V Back Porch		0 ~ 3000	58	
	4	Disp Line		0 ~ 1500	552	
	8	VS BEG		0 ~ 15	1	
	9	Field Enable		0 ~ 1	1	
	10	FLDBEG		0 ~ 15	2	
	11	FLDEND		0 ~ 15	9	
862		RGB Video (480P)	On Board (5BNC-Video)			
	0	Total Dots		0 ~ 3000	1245	
	1	Disp Dots		0 ~ 3000	1024	
	2	H Bck Porch		0 ~ 3000	168	
	3	V Back Porch		0 ~ 3000	39	
	4	Disp Line		0 ~ 1500	476	
	8	VS BEG		0 ~ 15	2	
	9	Field Enable		0 ~ 1	0	
	10	FLDBEG		0 ~ 15	0	
	11	FLDEND		0 ~ 15	0	
863		RGB Video (575P)	On Board (5BNC-Video)			
	0	Total Dots		0 ~ 3000	1278	
	1	Disp Dots		0 ~ 3000	1024	
	2	H Bck Porch		0 ~ 3000	200	
	3	V Back Porch		0 ~ 3000	49	
	4	Disp Line		0 ~ 1500	550	
	8	VS BEG		0 ~ 15	2	
	9	Field Enable		0 ~ 1	0	
	10	FLDBEG		0 ~ 15	0	
	11	FLDEND		0 ~ 15	0	
864		RGB Video (720P-60)	On Board (5BNC-Video)			
	0	Total Dots		0 ~ 3000	1650	
	1	Disp Dots		0 ~ 3000	1268	
	2	H Bck Porch		0 ~ 3000	284	
	3	V Back Porch		0 ~ 3000	25	
	4	Disp Line		0 ~ 1500	719	
	8	VS BEG		0 ~ 15	2	

GROUP	NO.	ITEM	FUNCTION	RANGE	INITIAL VALUE	NOTE
	9	Field Enable		0 ~ 1	0	
	10	FLDBEG		0 ~ 15	0	
	11	FLDEND		0 ~ 15	0	
865		RGB Video (720P-50)	On Board (5BNC-Video)			
	0	Total Dots		0 ~ 3000	1980	
	1	Disp Dots		0 ~ 3000	1270	
	2	H Bck Porch		0 ~ 3000	283	
	3	V Back Porch		0 ~ 3000	26	
	4	Disp Line		0 ~ 1500	719	
	8	VS BEG		0 ~ 15	2	
	9	Field Enable		0 ~ 1	0	
	10	FLDBEG		0 ~ 15	0	
	11	FLDEND		0 ~ 15	0	
866		RGB Video (1080i-60)	On Board (5BNC-Video)			
	0	Total Dots		0 ~ 3000	2200	
	1	Disp Dots		0 ~ 3000	1910	
	2	H Bck Porch		0 ~ 3000	219	
	3	V Back Porch		0 ~ 3000	42	
	4	Disp Line		0 ~ 1500	1080	
	8	VS BEG		0 ~ 15	1	
	9	Field Enable		0 ~ 1	1	
	10	FLDBEG		0 ~ 15	2	
	11	FLDEND		0 ~ 15	9	
867		RGB Video (1035i)	On Board (5BNC-Video)			
	0	Total Dots		0 ~ 3000	2200	
	1	Disp Dots		0 ~ 3000	1852	
	2	H Bck Porch		0 ~ 3000	247	
	3	V Back Porch		0 ~ 3000	93	
	4	Disp Line		0 ~ 1500	1008	
	8	VS BEG		0 ~ 15	1	
	9	Field Enable		0 ~ 1	1	
	10	FLDBEG		0 ~ 15	2	
	11	FLDEND		0 ~ 15	9	
868		RGB Video (1080i-50)	On Board (5BNC-Video)			
	0	Total Dots		0 ~ 3000	2640	
	1	Disp Dots		0 ~ 3000	1916	
	2	H Bck Porch		0 ~ 3000	218	
	3	V Back Porch		0 ~ 3000	41	
	4	Disp Line		0 ~ 1500	1081	
	8	VS BEG		0 ~ 15	1	
	9	Field Enable		0 ~ 1	1	
	10	FLDBEG		0 ~ 15	2	
	11	FLDEND		0 ~ 15	9	
969		RGB Video (1080P-60)	On Board (5BNC-Video)			
	0	Total Dots		0 ~ 3000	1565	
	1	Disp Dots		0 ~ 3000	1362	
	2	H Bck Porch		0 ~ 3000	160	
	3	V Back Porch		0 ~ 3000	41	
	4	Disp Line		0 ~ 1500	1080	
	8	VS BEG		0 ~ 15	2	
	9	Field Enable		0 ~ 1	0	
	10	FLDBEG		0 ~ 15	0	
	11	FLDEND		0 ~ 15	0	
870		RGB Video (1080P-65)	On Board (5BNC-Video)			
	0	Total Dots		0 ~ 3000	1878	
	1	Disp Dots		0 ~ 3000	1362	
	2	H Bck Porch		0 ~ 3000	160	
	3	V Back Porch		0 ~ 3000	41	
	4	Disp Line		0 ~ 1500	1080	
	8	VS BEG		0 ~ 15	2	
	9	Field Enable		0 ~ 1	0	
	10	FLDBEG		0 ~ 15	0	
	11	FLDEND		0 ~ 15	0	
872		RGB Video (1080P-30)	On Board (5BNC-Video)			
	0	Total Dots		0 ~ 3000	1565	
	1	Disp Dots		0 ~ 3000	1362	
	2	H Bck Porch		0 ~ 3000	160	
	3	V Back Porch		0 ~ 3000	41	
	4	Disp Line		0 ~ 1500	1080	
	8	VS BEG		0 ~ 15	2	
	9	Field Enable		0 ~ 1	0	
	10	FLDBEG		0 ~ 15	0	
	11	FLDEND		0 ~ 15	0	
873		RGB Video (1080P-25)	On Board (5BNC-Video)			

GROUP	NO.	ITEM	FUNCTION	RANGE	INITIAL VALUE	NOTE
	0	Total Dots		0 ~ 3000	1878	
	1	Disp Dots		0 ~ 3000	1362	
	2	H Bck Porch		0 ~ 3000	160	
	3	V Back Porch		0 ~ 3000	41	
	4	Disp Line		0 ~ 1500	1080	
	8	VS BEG		0 ~ 15	2	
	9	Field Enable		0 ~ 1	0	
	10	FLDBEG		0 ~ 15	0	
	11	FLDEND		0 ~ 15	0	
874		RGB Video (1080P-24)	On Board (5BNC-Video)			
	0	Total Dots		0 ~ 3000	1957	
	1	Disp Dots		0 ~ 3000	1362	
	2	H Bck Porch		0 ~ 3000	160	
	3	V Back Porch		0 ~ 3000	41	
	4	Disp Line		0 ~ 1500	1080	
	8	VS BEG		0 ~ 15	2	
	9	Field Enable		0 ~ 1	0	
	10	FLDBEG		0 ~ 15	0	
	11	FLDEND		0 ~ 15	0	
875		RGB Video (1080-30psf)	On Board (5BNC-Video)			
	0	Total Dots		0 ~ 3000	2200	
	1	Disp Dots		0 ~ 3000	1910	
	2	H Bck Porch		0 ~ 3000	219	
	3	V Back Porch		0 ~ 3000	40	
	4	Disp Line		0 ~ 1500	1080	
	8	VS BEG		0 ~ 15	2	
	9	Field Enable		0 ~ 1	0	
	10	FLDBEG		0 ~ 15	0	
	11	FLDEND		0 ~ 15	0	
876		RGB Video (1080-25psf)	On Board (5BNC-Video)			
	0	Total Dots		0 ~ 3000	2640	
	1	Disp Dots		0 ~ 3000	1916	
	2	H Bck Porch		0 ~ 3000	216	
	3	V Back Porch		0 ~ 3000	40	
	4	Disp Line		0 ~ 1500	1080	
	8	VS BEG		0 ~ 15	2	
	9	Field Enable		0 ~ 1	0	
	10	FLDBEG		0 ~ 15	0	
	11	FLDEND		0 ~ 15	0	
877		RGB Video (1080-24psf)	On Board (5BNC-Video)			
	0	Total Dots		0 ~ 3000	2750	
	1	Disp Dots		0 ~ 3000	1914	
	2	H Bck Porch		0 ~ 3000	218	
	3	V Back Porch		0 ~ 3000	40	
	4	Disp Line		0 ~ 1500	1080	
	8	VS BEG		0 ~ 15	2	
	9	Field Enable		0 ~ 1	0	
	10	FLDBEG		0 ~ 15	0	
	11	FLDEND		0 ~ 15	0	
900		CXD3540_TG				
	0	SCANM		0 ~ 3	2	
	1	FRPM		0 ~ 3	2	* Common Center Adj.
	2	SCAN_SEL		0 ~ 1	1	
	3	HP		0 ~ 2047	14	
	4	VP_G		0 ~ 255	2	
	5	SHP_R		0 ~ 127	58	
	6	SHP_G		0 ~ 127	58	
	7	SHP_B		0 ~ 127	58	
	8	FRP_HP		0 ~ 2047	49	
	9	PRG_U		0 ~ 1023	49	
	10	PRG_D		0 ~ 1023	112	
	11	HST_R_PF		0 ~ 127	22	
	12	HST_R_PC		0 ~ 127	7	
	13	DCK1_R_WA		0 ~ 127	11	
	14	DCK1_R_F		0 ~ 127	48	
	15	DCK2_R_WA		0 ~ 127	0	
	16	DCK2_R_F		0 ~ 127	0	
	17	DCK3_R_WA		0 ~ 127	11	
	18	DCK3_R_F		0 ~ 127	0	
	19	DCK4_R_WA		0 ~ 127	0	
	20	DCK4_R_F		0 ~ 127	0	
	21	HST_G_PF		0 ~ 127	22	
	22	HST_G_PC		0 ~ 127	7	
	23	DCK1_G_WA		0 ~ 127	11	
	24	DCK1_G_F		0 ~ 127	48	
	25	DCK2_G_WA		0 ~ 127	0	
	26	DCK2_G_F		0 ~ 127	0	

GROUP	NO.	ITEM	FUNCTION	RANGE	INITIAL VALUE	NOTE
	27	DCK3_G_WA		0 ~ 127	11	
	28	DCK3_G_F		0 ~ 127	0	
	29	DCK4_G_WA		0 ~ 127	0	
	30	DCK4_G_F		0 ~ 127	0	
	31	HST_B_PF		0 ~ 127	22	
	32	HST_B_PC		0 ~ 127	7	
	33	DCK1_B_WA		0 ~ 127	11	
	34	DCK1_B_F		0 ~ 127	48	
	35	DCK2_B_WA		0 ~ 127	0	
	36	DCK2_B_F		0 ~ 127	0	
	37	DCK3_B_WA		0 ~ 127	11	
	38	DCK3_B_F		0 ~ 127	0	
	39	DCK4_B_WA		0 ~ 127	0	
	40	DCK4_B_F		0 ~ 127	0	
	41	PCG_U		0 ~ 1023	49	
	42	PCG_D		0 ~ 1023	206	
	43	ENB_U		0 ~ 1023	120	
	44	ENB_D		0 ~ 1023	26	
	45	CLP_U		0 ~ 1023	0	
	46	CLP_D		0 ~ 1023	0	
	47	VCKP		0 ~ 2047	49	
	48	VCKPD		0 ~ 2047	1344	
	49	VSTP		0 ~ 255	125	
	50	DFT_ON		0 ~ 1	0	
	51	HPC_R_DAT0		0 ~ 8191	0	
	52	HPC_R_DAT1		0 ~ 8191	0	
	53	HPC_G_DAT0		0 ~ 8191	0	
	54	HPC_G_DAT1		0 ~ 8191	0	
	55	HPC_B_DAT0		0 ~ 8191	0	
	56	HPC_B_DAT1		0 ~ 8191	0	
	57	SCAN_HP		0 ~ 2047	49	
910		CXD3540_DSD_PRE				
	0	USR_R_GAIN		0 ~ 1023	512	
	1	USR_G_GAIN		0 ~ 1023	512	
	2	USR_B_GAIN		0 ~ 1023	512	
	3	USR_R_BRIGHT		0 ~ 8191	0	
	4	USR_G_BRIGHT		0 ~ 8191	0	
	5	USR_B_BRIGHT		0 ~ 8191	0	
	6	FRM_DAT		0 ~ 255	0	
	7	SEL_MODE		0 ~ 7	0	
	8	RLR_DUM_PIX		0 ~ 127	4	
920		CXD3540_GAM				
	0	GAM_OM		0 ~ 1	1	
	1	GAM_R_GAIN		0 ~ 1023	512	
	2	GAM_G_GAIN		0 ~ 1023	512	
	3	GAM_B_GAIN		0 ~ 1023	512	
	4	GAM_R_GRIGHT		0 ~ 8191	0	
	5	GAM_G_GRIGHT		0 ~ 8191	0	
	6	GAM_B_GRIGHT		0 ~ 8191	0	
930		Lamp Mode Change	(Factory use only)			
	0	ALL Lamp Mode	0: Allow to change lamp mode. When the value is set from 0 to 10, the lamp mode will be changed.	0 ~ 10	0	
	1	Lamp 1 mode	11: This lamp mode is selected.	0 ~ 10	0	
	2	Lamp 2 mode	99: Now lamp mode is changing.	0 ~ 10	0	
931		Lamp Factory Time	(Factory use only)			
	0	All to 2L-1	Lamp Mode Changing Time for Factory (sec.) Step :10	50 ~ 200	50	
	1	2L-1 to 2L-2	Lamp Mode Changing Time for Factory (sec.) Step :10	50 ~ 200	120	
	2	2L-2 to All	Lamp Mode Changing Time for Factory (sec.) Step :10	50 ~ 200	120	
	3	All to 2L-2	Lamp Mode Changing Time for Factory (sec.) Step :10	50 ~ 200	50	
	4	2L-2 to 2L-1	Lamp Mode Changing Time for Factory (sec.) Step :10	50 ~ 200	120	
	5	2L-1 to All	Lamp Mode Changing Time for Factory (sec.) Step :10	50 ~ 200	120	
940		CXD3540_VXT				
	0	VXT_DETECT_ON		0 ~ 1	1	
	1	VXT_GSEL		0 ~ 3	2	
	2	VXT_RCALC		0 ~ 1	0	
	3	VXT_GCALC		0 ~ 1	0	
	4	VXT_BCALC		0 ~ 1	0	
	5	VXT_ON		0 ~ 1	0	
	6	VXT_RDATU1		0 ~ 255	8	
	7	VXT_RDATU2		0 ~ 255	9	
	8	VXT_RDATU3		0 ~ 255	22	
	9	VXT_GDATU1		0 ~ 255	8	
	10	VXT_GDATU2		0 ~ 255	9	
	11	VXT_GDATU3		0 ~ 255	22	
	12	VXT_BDATU1		0 ~ 255	8	
	13	VXT_BDATU2		0 ~ 255	9	
	14	VXT_BDATU3		0 ~ 255	22	

GROUP	NO.	ITEM	FUNCTION	RANGE	INITIAL VALUE	NOTE
	15	VXT_RDATL1		0 ~ 255	4	
	16	VXT_RDATL2		0 ~ 255	5	
	17	VXT_RDATL3		0 ~ 255	11	
	18	VXT_GDATL1		0 ~ 255	4	
	19	VXT_GDATL2		0 ~ 255	5	
	20	VXT_GDATL3		0 ~ 255	11	
	21	VXT_BDATL1		0 ~ 255	4	
	22	VXT_BDATU2		0 ~ 255	5	
	23	VXT_BDATL3		0 ~ 255	11	
	24	VXT_TH_ON		0 ~ 15	15	
	25	VXT_TH1		0 ~ 255	30	
	26	VXT_TH2		0 ~ 255	61	
	27	VXT_TH3		0 ~ 255	188	
	28	VXT_TH4		0 ~ 255	229	
950		CXD3540_CSC	Color Shading Correction Threshold at All Lamps On			
	0	CSC_XH		0 ~ 1	0	
	1	CSC_ON		0 ~ 1	1	
	2	CSC_R_GP1		0 ~ 511	376	
	3	CSC_R_GP2		0 ~ 511	331	
	4	CSC_R_GP3		0 ~ 511	313	
	5	CSC_R_GP4		0 ~ 511	299	
	6	CSC_R_GP5		0 ~ 511	272	
	7	CSC_R_GP6		0 ~ 511	233	
	8	CSC_R_GP7		0 ~ 511	214	
	9	CSC_R_GP8		0 ~ 511	161	
	10	CSC_G_GP1		0 ~ 511	342	
	11	CSC_G_GP2		0 ~ 511	317	
	12	CSC_G_GP3		0 ~ 511	302	
	13	CSC_G_GP4		0 ~ 511	290	
	14	CSC_G_GP5		0 ~ 511	265	
	15	CSC_G_GP6		0 ~ 511	228	
	16	CSC_G_GP7		0 ~ 511	209	
	17	CSC_G_GP8		0 ~ 511	159	
	18	CSC_B_GP1		0 ~ 511	353	
	19	CSC_B_GP2		0 ~ 511	325	
	20	CSC_B_GP3		0 ~ 511	310	
	21	CSC_B_GP4		0 ~ 511	297	
	22	CSC_B_GP5		0 ~ 511	271	
	23	CSC_B_GP6		0 ~ 511	232	
	24	CSC_B_GP7		0 ~ 511	209	
	25	CSC_B_GP8		0 ~ 511	161	
951		CXD3540_CSC_A	Color Shading Correction at Lamp Mode A			
	0	CSC_XH		0 ~ 1	0	
	1	CSC_ON		0 ~ 1	1	
	2	CSC_R_GP1		0 ~ 511	376	
	3	CSC_R_GP2		0 ~ 511	331	
	4	CSC_R_GP3		0 ~ 511	313	
	5	CSC_R_GP4		0 ~ 511	299	
	6	CSC_R_GP5		0 ~ 511	272	
	7	CSC_R_GP6		0 ~ 511	233	
	8	CSC_R_GP7		0 ~ 511	214	
	9	CSC_R_GP8		0 ~ 511	161	
	10	CSC_G_GP1		0 ~ 511	342	
	11	CSC_G_GP2		0 ~ 511	317	
	12	CSC_G_GP3		0 ~ 511	302	
	13	CSC_G_GP4		0 ~ 511	290	
	14	CSC_G_GP5		0 ~ 511	265	
	15	CSC_G_GP6		0 ~ 511	228	
	16	CSC_G_GP7		0 ~ 511	209	
	17	CSC_G_GP8		0 ~ 511	159	
	18	CSC_B_GP1		0 ~ 511	353	
	19	CSC_B_GP2		0 ~ 511	325	
	20	CSC_B_GP3		0 ~ 511	310	
	21	CSC_B_GP4		0 ~ 511	297	
	22	CSC_B_GP5		0 ~ 511	271	
	23	CSC_B_GP6		0 ~ 511	232	
	24	CSC_B_GP7		0 ~ 511	209	
	25	CSC_B_GP8		0 ~ 511	161	
952		CXD3540_CSC_B	Color Shading Correction at Lamp Mode B			
	0	CSC_XH		0 ~ 1	0	
	1	CSC_ON		0 ~ 1	1	
	2	CSC_R_GP1		0 ~ 511	376	
	3	CSC_R_GP2		0 ~ 511	331	
	4	CSC_R_GP3		0 ~ 511	313	
	5	CSC_R_GP4		0 ~ 511	299	
	6	CSC_R_GP5		0 ~ 511	272	
	7	CSC_R_GP6		0 ~ 511	233	
	8	CSC_R_GP7		0 ~ 511	214	
	9	CSC_R_GP8		0 ~ 511	161	

GROUP	NO.	ITEM	FUNCTION	RANGE	INITIAL VALUE	NOTE
	10	CSC_G_GP1		0 ~ 511	342	
	11	CSC_G_GP2		0 ~ 511	317	
	12	CSC_G_GP3		0 ~ 511	302	
	13	CSC_G_GP4		0 ~ 511	290	
	14	CSC_G_GP5		0 ~ 511	265	
	15	CSC_G_GP6		0 ~ 511	228	
	16	CSC_G_GP7		0 ~ 511	209	
	17	CSC_G_GP8		0 ~ 511	159	
	18	CSC_B_GP1		0 ~ 511	353	
	19	CSC_B_GP2		0 ~ 511	325	
	20	CSC_B_GP3		0 ~ 511	310	
	21	CSC_B_GP4		0 ~ 511	297	
	22	CSC_B_GP5		0 ~ 511	271	
	23	CSC_B_GP6		0 ~ 511	232	
	24	CSC_B_GP7		0 ~ 511	209	
	25	CSC_B_GP8		0 ~ 511	161	
960		CXD3540_SHAD				
	0	SHAD_GSEL		0 ~ 3	1	
	1	SHAD_R_CALC		0 ~ 1	1	
	2	SHAD_G_CALC		0 ~ 1	1	
	3	SHAD_B_CALC		0 ~ 1	1	
	4	SHAD_ON		0 ~ 1	0	
	5	SHAD_R_DAT1		0 ~ 255	37	
	6	SHAD_R_DAT2		0 ~ 255	18	
	7	SHAD_R_DAT3		0 ~ 255	12	
	8	SHAD_G_DAT1		0 ~ 255	37	
	9	SHAD_G_DAT2		0 ~ 255	18	
	10	SHAD_G_DAT3		0 ~ 255	12	
	11	SHAD_B_DAT1		0 ~ 255	37	
	12	SHAD_B_DAT2		0 ~ 255	18	
	13	SHAD_B_DAT3		0 ~ 255	12	
	14	SHAD_COEF		0 ~ 4095	1358	
970		CXD3540_VS				
	0	VS_GSEL		0 ~ 3	0	
	1	VS_R_RGT		0 ~ 1	0	
	2	VS_G_RGT		0 ~ 1	0	
	3	VS_B_RGT		0 ~ 1	0	
	4	VS_CYCLE		0 ~ 1	0	
	5	VS_ON		0 ~ 1	0	
	6	VS_GDAT1		0 ~ 255	0	
	7	VS_DAT		0 ~ 255	0	
	8	VS_GDAT3		0 ~ 255	0	
	9	VS_GDAT2		0 ~ 255	0	
980		CXD3540_DSDPOST1				
	0	HXT_TH4_ON		0 ~ 1	0	
	1	HXT_TH3_ON		0 ~ 1	0	
	2	HXT_TH2_ON		0 ~ 1	0	
	3	HXT_TH2_ON		0 ~ 1	0	
	4	HXT_TH _ON		0 ~ 1	0	
	5	HXT_RCALC		0 ~ 1	0	
	6	HXT_GCALC		0 ~ 1	0	
	7	HXT_BCALC		0 ~ 1	0	
	8	HXT_GSEL		0 ~ 3	0	
	9	HXT_RDAT1		0 ~ 255	0	
	10	HXT_RDAT2		0 ~ 255	0	
	11	HXT_RDAT3		0 ~ 255	0	
	12	HXT_GDAT1		0 ~ 255	0	
	13	HXT_GDAT2		0 ~ 255	0	
	14	HXT_GDAT3		0 ~ 255	0	
	15	HXT_BDAT1		0 ~ 255	0	
	16	HXT_BDAT2		0 ~ 255	0	
	17	HXT_BDAT3		0 ~ 255	0	
	18	HXT_TH1		0 ~ 255	0	
	19	HXT_TH2		0 ~ 255	0	
	20	HXT_TH3		0 ~ 255	0	
	21	HXT_TH4		0 ~ 255	0	
	22	HXT_MODE2		0 ~ 7	0	
982		GAMMA Adjustment (Automatic Calibration)				* White Balance Adj.
	0	Ye Auto: PC Standard : LVL_USE	[Unit] 0.01	1 ~ 999	100	
	1	Ye Auto: PC Standard :W_SXY_0	[Unit] 0.001	0 ~ 999	310	
	2	Ye Auto: PC Standard :W_SXY_1	[Unit] 0.001	0 ~ 999	330	
	3	Ye Auto: PC Standard :B_SXY_0	[Unit] 0.001	0 ~ 999	0	
	4	Ye Auto: PC Standard :B_SXY_1	[Unit] 0.001	0 ~ 999	0	
	5	Ye Auto: PC Standard :LMIT_CONTRAST		100 ~ 5000	5000	
	6	Ye Auto: PC Standard :CAL_CONT	Result Contrast			
	7	Ye Auto: PC Standard :CONT_USE	[Unit] 0.001	100 ~ 5000	1000	
	8	Ye Auto: PC Real : LVL_USE	[Unit] 0.01	1 ~ 999	85	
	9	Ye Auto: PC Real :W_SXY_0	[Unit] 0.001	0 ~ 999	315	

GROUP	NO.	ITEM	FUNCTION	RANGE	INITIAL VALUE	NOTE
	10	Ye Auto: PC Real :W_SXY_1	[Unit] 0.001	0 ~ 999	340	
	11	Ye Auto: PC Real :B_SXY_0	[Unit] 0.001	0 ~ 999	315	
	12	Ye Auto: PC Real :B_SXY_1	[Unit] 0.001	0 ~ 999	340	
	13	Ye Auto: PC Real :LMIT_CONTRAST		100 ~ 5000	1800	
	14	Ye Auto: PC Real :CAL_CONT	Result Contrast			
	15	Ye Auto: PC Real :CONT_USE	[Unit] 0.001	100 ~ 5000	500	
	16	Ye Auto: AV Standard : LVL_USE	[Unit] 0.01	1 ~ 999	90	
	17	Ye Auto: AV Standard :W_SXY_0	[Unit] 0.001	0 ~ 999	310	
	18	Ye Auto: AV Standard :W_SXY_1	[Unit] 0.001	0 ~ 999	330	
	19	Ye Auto: AV Standard :B_SXY_0	[Unit] 0.001	0 ~ 999	310	
	20	Ye Auto: AV Standard :B_SXY_1	[Unit] 0.001	0 ~ 999	330	
	21	Ye Auto: AV Standard :LMIT_CONTRAST		100 ~ 5000	2000	
	22	Ye Auto: AV Standard :CAL_CONT	Result Contrast			
	23	Ye Auto: AV Standard :CONT_USE	[Unit] 0.001	100 ~ 5000	500	
	24	Ye Auto: AV Cinema : LVL_USE	[Unit] 0.01	1 ~ 999	80	
	25	Ye Auto: AV Cinema :W_SXY_0	[Unit] 0.001	0 ~ 999	315	
	26	Ye Auto: AV Cinema :W_SXY_1	[Unit] 0.001	0 ~ 999	328	
	27	Ye Auto: AV Cinema :B_SXY_0	[Unit] 0.001	0 ~ 999	315	
	28	Ye Auto: AV Cinema :B_SXY_1	[Unit] 0.001	0 ~ 999	328	
	29	Ye Auto: AV Cinema :LMIT_CONTRAST		100 ~ 5000	1400	
	30	Ye Auto: AV Cinema :CAL_CONT	Result Contrast			
	31	Ye Auto: AV Cinema :CONT_USE	[Unit] 0.001	100 ~ 5000	500	
	32	Ye Off: PC Standard : LVL_USE	[Unit] 0.01	1 ~ 999	85	
	33	Ye Off: PC Standard :W_SXY_0	[Unit] 0.001	0 ~ 999	287	
	34	Ye Off: PC Standard :W_SXY_1	[Unit] 0.001	0 ~ 999	317	
	35	Ye Off: PC Standard :B_SXY_0	[Unit] 0.001	0 ~ 999	0	
	36	Ye Off: PC Standard :B_SXY_1	[Unit] 0.001	0 ~ 999	0	
	37	Ye Off: PC Standard :LMIT_CONTRAST		100 ~ 5000	5000	
	38	Ye Off: PC Standard :CAL_CONT	Result Contrast			
	39	Ye Off: PC Standard :CONT_USE	[Unit] 0.001	100 ~ 5000	500	
	40	Ye Off: PC Real : LVL_USE	[Unit] 0.01	1 ~ 999	75	
	41	Ye Off: PC Real :W_SXY_0	[Unit] 0.001	0 ~ 999	292	
	42	Ye Off: PC Real :W_SXY_1	[Unit] 0.001	0 ~ 999	323	
	43	Ye Off: PC Real :B_SXY_0	[Unit] 0.001	0 ~ 999	292	
	44	Ye Off: PC Real :B_SXY_1	[Unit] 0.001	0 ~ 999	323	
	45	Ye Off: PC Real :LMIT_CONTRAST		100 ~ 5000	1400	
	46	Ye Off: PC Real :CAL_CONT	Result Contrast			
	47	Ye Off: PC Real :CONT_USE	[Unit] 0.001	100 ~ 5000	500	
	48	Ye Off: AV Standard : LVL_USE	[Unit] 0.01	1 ~ 999	75	
	49	Ye Off: AV Standard :W_SXY_0	[Unit] 0.001	0 ~ 999	287	
	50	Ye Off: AV Standard :W_SXY_1	[Unit] 0.001	0 ~ 999	317	
	51	Ye Off: AV Standard :B_SXY_0	[Unit] 0.001	0 ~ 999	287	
	52	Ye Off: AV Standard :B_SXY_1	[Unit] 0.001	0 ~ 999	317	
	53	Ye Off: AV Standard :LMIT_CONTRAST		100 ~ 5000	1700	
	54	Ye Off: AV Standard :CAL_CONT	Result Contrast			
	55	Ye Off: AV Standard :CONT_USE	[Unit] 0.001	100 ~ 5000	500	
	56	Ye Off: AV Cinema : LVL_USE	[Unit] 0.01	1 ~ 999	60	
	57	Ye Off: AV Cinema :W_SXY_0	[Unit] 0.001	0 ~ 999	313	
	58	Ye Off: AV Cinema :W_SXY_1	[Unit] 0.001	0 ~ 999	329	
	59	Ye Off: AV Cinema :B_SXY_0	[Unit] 0.001	0 ~ 999	313	
	60	Ye Off: AV Cinema :B_SXY_1	[Unit] 0.001	0 ~ 999	329	
	61	Ye Off: AV Cinema :LMIT_CONTRAST		100 ~ 5000	1200	
	62	Ye Off: AV Cinema :CAL_CONT	Result Contrast			
	63	Ye Off: AV Cinema :CONT_USE	[Unit] 0.001	100 ~ 5000	500	
	64	Auto Gamma CALC	Execute calculation when the value is seto to 10.		0	
	65	Auto Gamma CALC MODE	Switch Auto Calc algorithm	0 ~ 1	1	
983		DAC Adjustment Parameter				
	0	GreenA X		0 ~ 1000	323	
	1	GreenA Y		0 ~ 1000	655	
	2	GreenB X		0 ~ 1000	323	
	3	GreenB Y		0 ~ 1000	655	
	4	Calcurated Green X		0 ~ 1000		
	5	Calcurated Green Y		0 ~ 1000		
	6	Result YE		0 ~ 255		
	7	VT Limit SW		0 ~ 1	0	
	8	VT Ratio Dac		0 ~ 100	100	
	9	CLC_STATUS	Result	0 ~ 9	0	
	10	DAC CALC	Readjust DAC when the value is set to 10.	0 ~ 10	0	
991		Digital Gamma Test Pattern				
	0	Test Pattern Display	0000 : Test Pattern OFF 0001 : White Raster 0002 : Window Pattern 0003 : Gray Scale 0004 : Striped 0005 : Diagonal Pattern 0006 : Dots Pattern	0 ~ 6	0	
	1	Red Setting		0 ~ 1023	960	
	2	Green Setting		0 ~ 1023	960	
	3	Blue Setting		0 ~ 1023	960	

Electrical Adjustment

GROUP	NO.	ITEM	FUNCTION	RANGE	INITIAL VALUE	NOTE
2000		CXD3815 Option Board (AV card)	* Only available when the option AV board is provided.			
	0	not used				
	1	not used				
	2	CVBS Y LEVEL	CVBS / Y Gain Adjustment	0 ~ 255	210	
	3	CVBS C LEVEL	C Gain Adjustment	0 ~ 255	140	
	4	Sub Hue	CVBS / S - Video Tint Adjustment	0 ~ 63	32	
	5	HS Slice Level	H Sync Slice Level	0 ~ 15	4	
	6	HS Slice Offset	H Sync Slice Level Offset	0 ~ 15	5	
	7	VS Slice Lebel	V Sync Slice Level	0 ~ 15	6	
	8	VS Slice Offset	V Sync Slice Level Offset	0 ~ 15	6	
	9	Sampling Phase	A / D Clock	0 ~ 63	0	
	10	Pre Shoot Level	Sub Sharpness	0 ~ 15	8	
	11	Over Shoot Level	Sub Sharpness	0 ~ 15	8	
	12	Y Filter	Setting Y Filter	0 ~ 7	5	
	13	C Filter	Setting C Filter	0 ~ 7	5	
	14	NTSC / PAL Detect	0 : 64H / 1V	0 ~ 3	1	
			1 : 96H / 1V			
			2 : 128H / 1V			
			3 : 160H / 1V			
2001		CXA2239 Option Board	* Only available when the option AV board is provided.			
	0	OUT1 GR		0 ~ 15	7	
	1	OUT1 GG		0 ~ 15	7	
	2	OUT1 GB		0 ~ 15	7	

Chassis over view

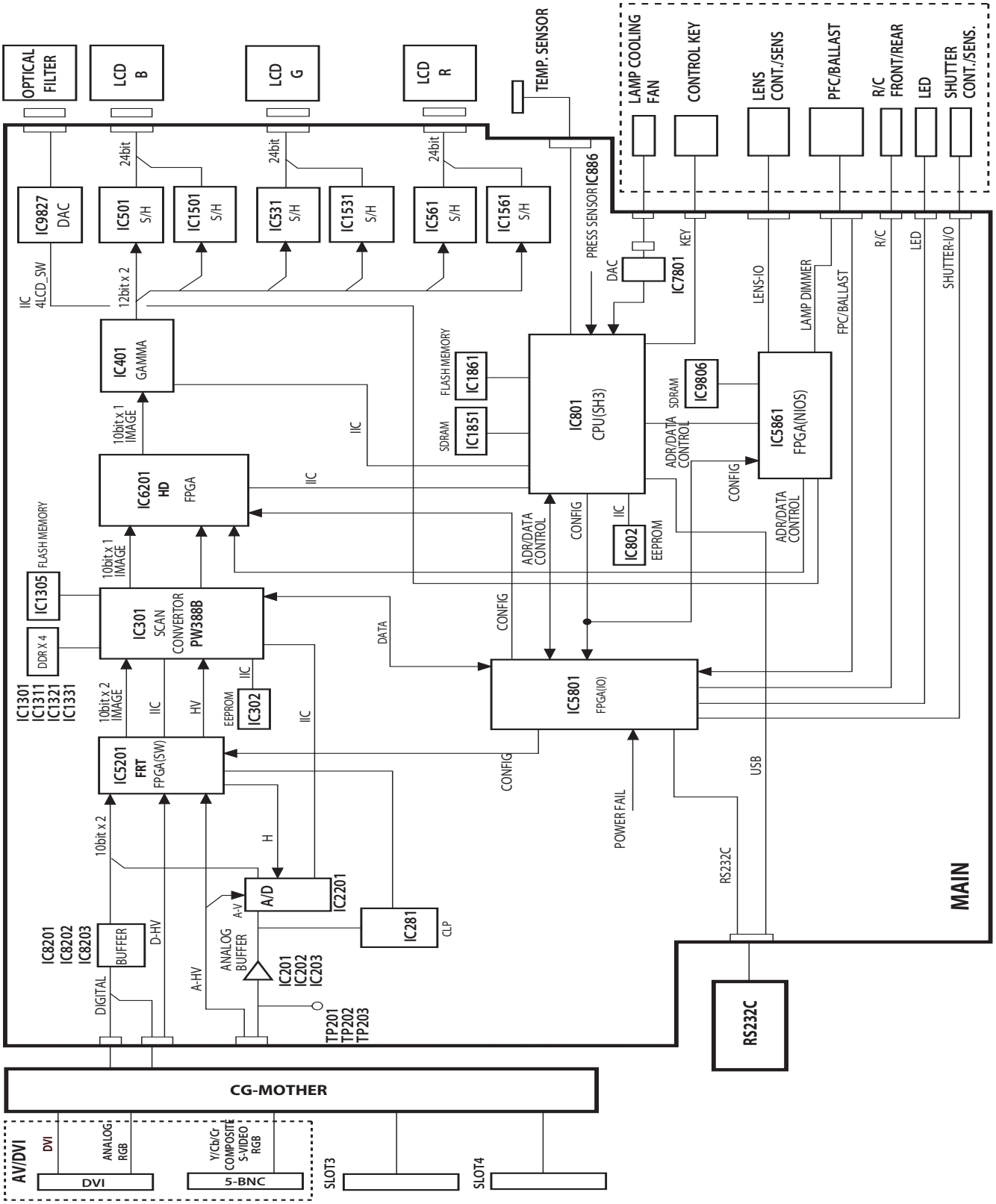

Boards Connection

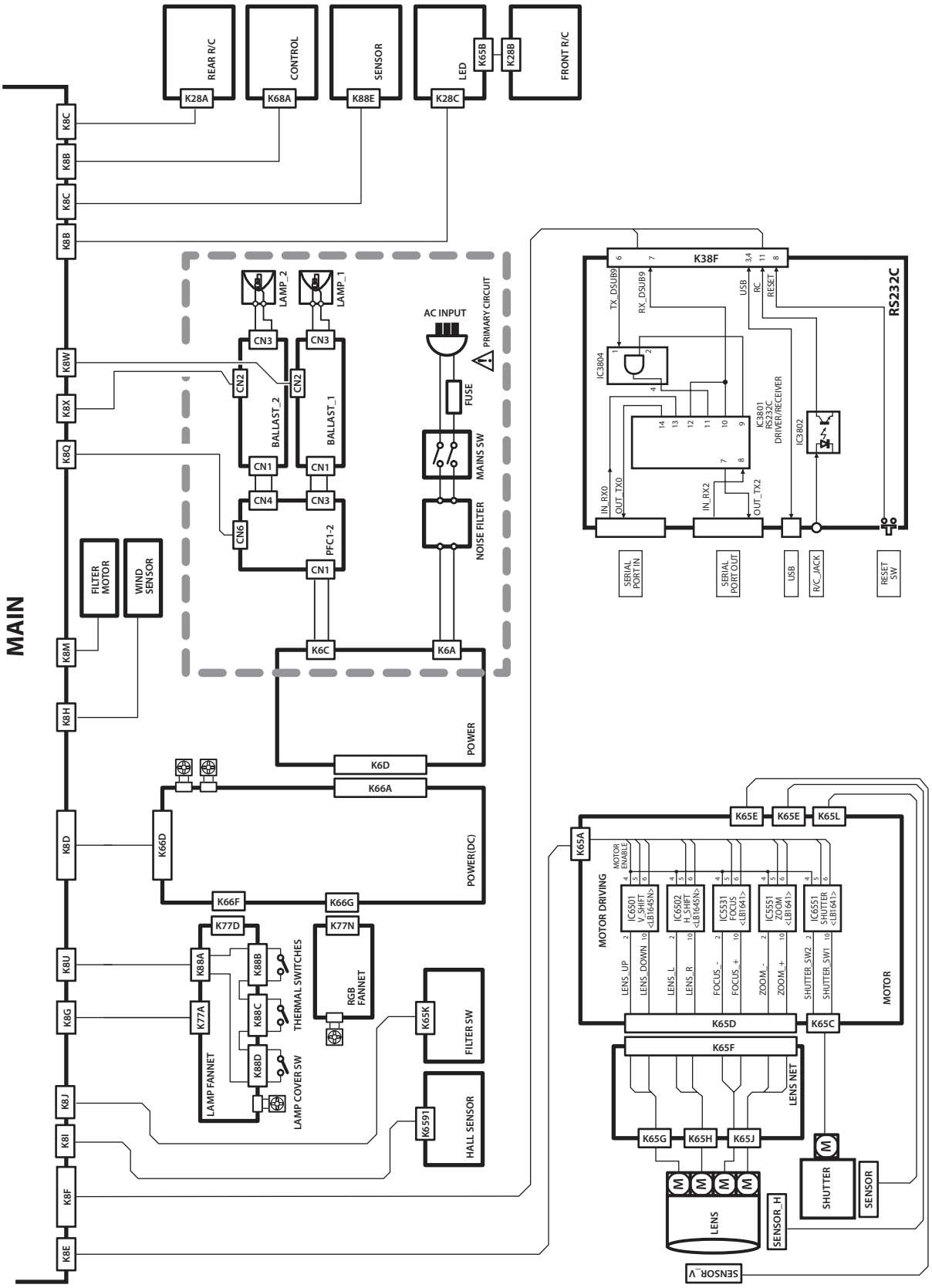

No Picture

Check the CG_MOTHER Board.

Check the Vcc voltages.
S9.6V / S6V (Always)
3.3V / 5V / -5V (Switched)
Check the signal lines.

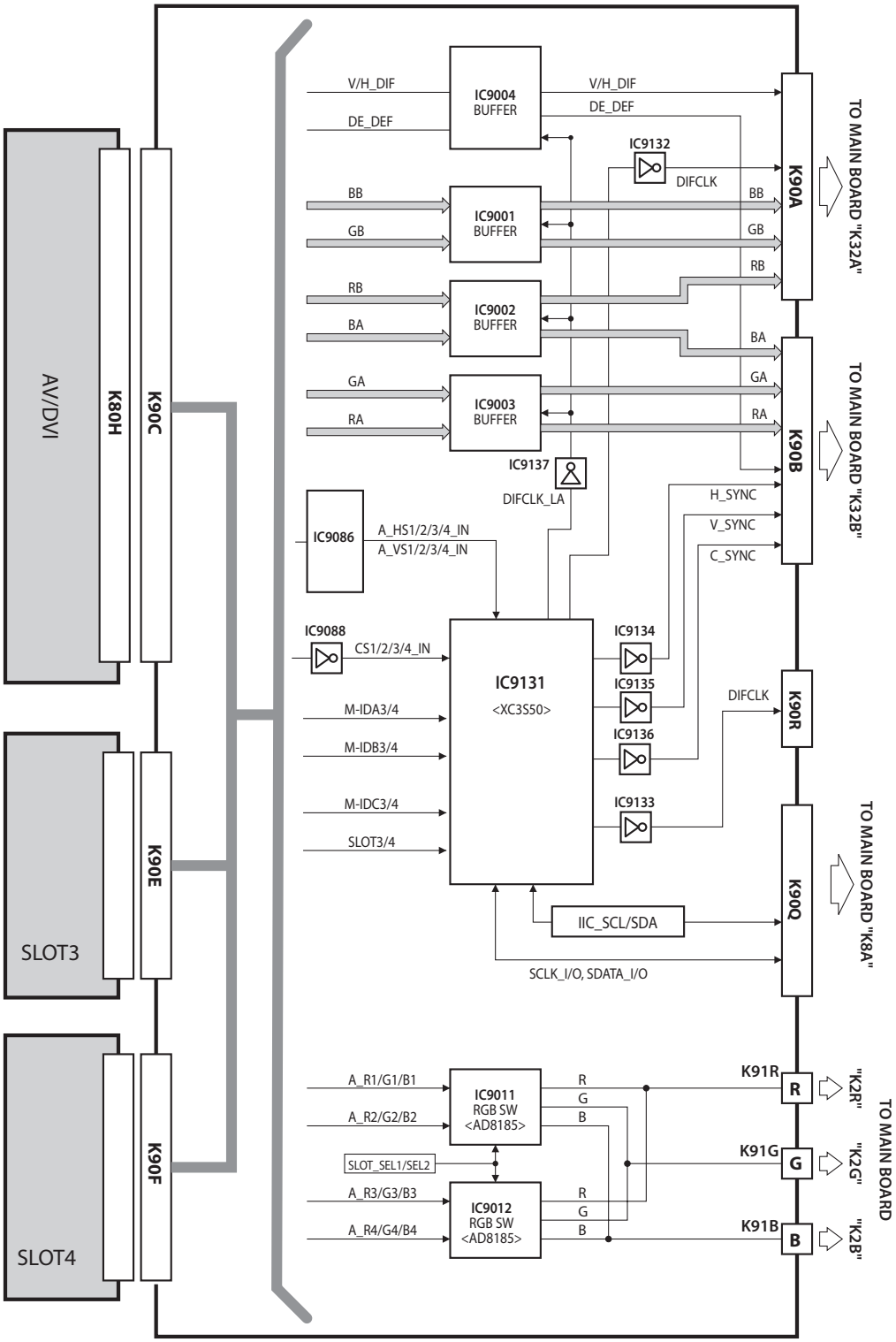

No Picture

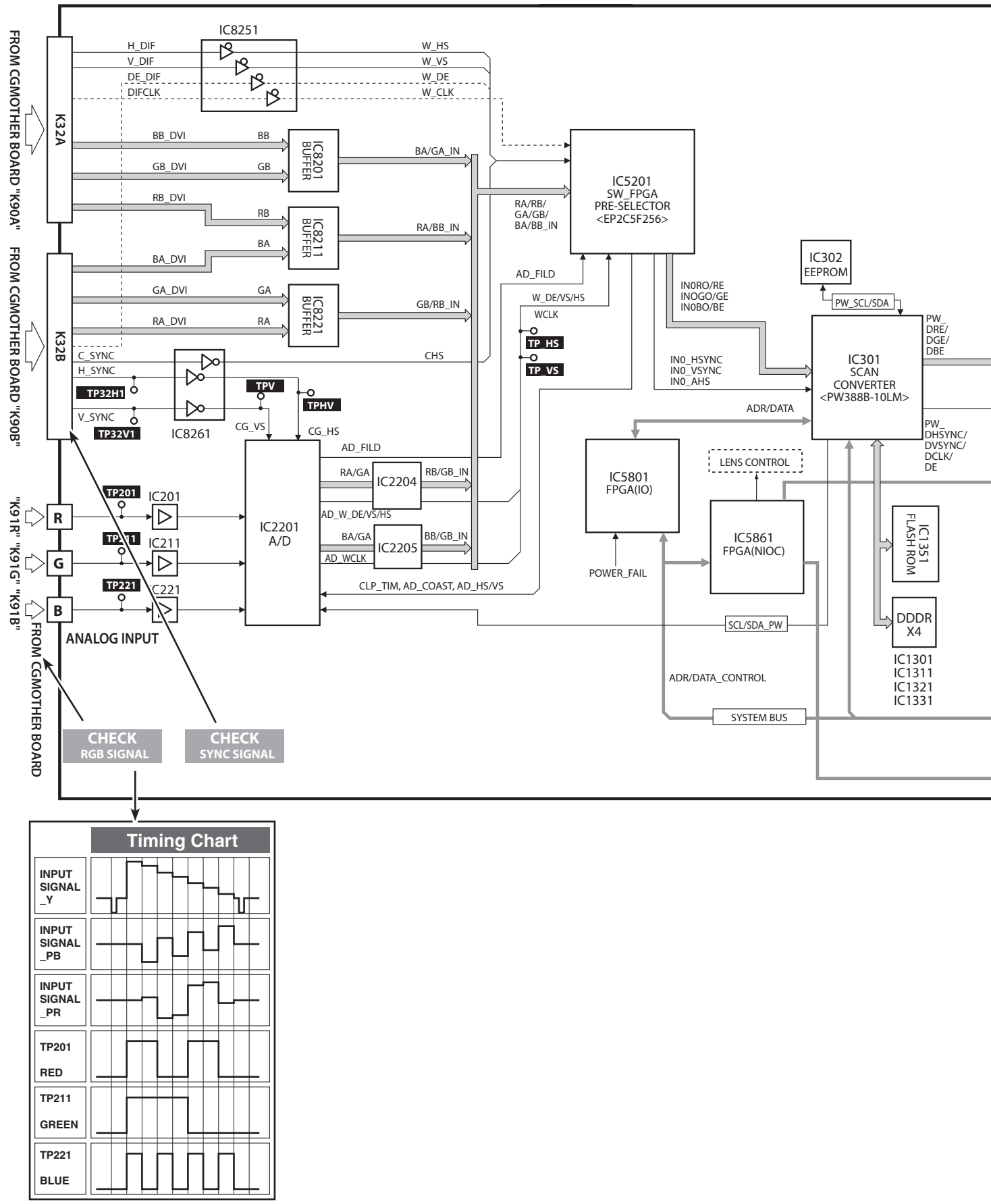
FROM CGMOTHER BOARD "K90A"
FROM CGMOTHER BOARD "K90B"
"K91R" "K91G" "K91B"
FROM CGMOTHER BOARD
K32A
K32B
R
G
B
ANALOG INPUT
IC8251
H_DIF
V_DIF
DE_DIF
DIFCLK
W_HS
W_VS
W_DE
W_CLK
BB_DVI
GB_DVI
RB_DVI
BA_DVI
GA_DVI
RA_DVI
BB
GB
RB
BA
GA
RA
IC8201 BUFFER
IC8211 BUFFER
IC8221 BUFFER
BA/GA_IN
RA/BB_IN
GB/RB_IN
C_SYNC
H_SYNC
V_SYNC
TP32H1
TP32V1
IC8261
TPV
TPHV
CG_VS
CG_HS
CHS
AD_FILD
TP201
TP211
TP221
IC201
IC211
IC221
IC2201 A/D
RA/GA
RB/GB_IN
IC2204
AD_W_DE/VS/HS
BA/GA
BB/GB_IN
IC2205
AD_WCLK
CLP_TIM, AD_COAST, AD_HS/VS
RA/RB/ GA/GB/ BA/BB_IN
IC5201 SW_FPGA PRE-SELECTOR <EP2C5F256>
AD_FILD
W_DE/VS/HS
WCLK
TP_HS
TP_VS
IN0RO/RE
INOGO/GE
IN0BO/BE
IC302 EEPROM
PW_SCL/SDA
IN0_HSYNC
IN0_VSYNC
IN0_AHS
IC301 SCAN CONVERTER <PW388B-10LM>
PW_ DRE/ DGE/ DBE
ADR/DATA
PW_ DHSYNC/ DVSYNC/ DCLK/ DE
IC5801 FPGA(IO)
LENS CONTROL
IC5861 FPGA(NIOC)
POWER_FAIL
IC1351 FLASH ROM
DDDR X4
IC1301
IC1311
IC1321
IC1331
SCL/SDA_PW
ADR/DATA_CONTROL
SYSTEM BUS
CHECK RGB SIGNAL
CHECK SYNC SIGNAL

Timing Chart
INPUT SIGNAL _Y
INPUT SIGNAL _PB
INPUT SIGNAL _PR
TP201 RED
TP211 GREEN
TP221 BLUE

Check the MAIN Board.

MAIN BOARD

CHECK PSIG SIGNAL

CHECK LCD PANEL DRIVE SIGNAL

PW_ DRE/ DGE/ DBE

PW_ DHSYNC/ DVSYNC/ DCLK/ DE

IC6201 FPGA <EP3C40F484>

RAOUT/ GAOUT/ BAOUT/

VOUT/ HOUT/ _PIC

IC401 DIGITAL GAMMA CORRECTION <CXD3548GB>

OUT_R1/R2

R1

R2

IC501 SAMPLE & HOLD <CXA7009R>

IC1501 SAMPLE & HOLD <CXA7009R>

FRP, VD, PRG_R, RCLK12_R RET_R, SCAN, TC_XCLR, GAN_SCL/SDA

TP501

K25R

B-LCD PANEL

OUT_G1/G2

G1

G2

IC531 SAMPLE & HOLD <CXA7009R>

IC1531 SAMPLE & HOLD <CXA7009R>

FRP, VD, PRG_G, RCLK12_G RET_G, SCAN, TC_XCLR, GAN_SCL/SDA

TP531

K25G

G-LCD PANEL

OUT_B1/B2

B1

B2

IC561 SAMPLE & HOLD <CXA7009R>

IC1561 SAMPLE & HOLD <CXA7009R>

FRP, VD, PRG_B, RCLK12_B RET_B, SCAN, TC_XCLR, GAN_SCL/SDA

TP561

K25B

R-LCD PANEL

SYSTEM BUS

IC802 EEPROM

IC801 CPU(SH3) <HD641772F>

IC1861 FLASH ROM

IC1851 SDRAM

4LCD_SDA/SCL

IC9827 DAC

4LCD_SW

IC9828

IC9829

IC9830

TP4415

TP4414

K25Y

OPTICAL FILTER

Timing Chart

TP503 TP533 TP563 PSIG	
TP561 RED S & H OUTPUT	
TP531 GREEN S & H OUTPUT	
TP501 BLUE S & H OUTPUT	

No Picture

Check the DVI, D-SUB terminals on the AV/DIV board.

Check the Vcc voltages.
S9V (Always)
9V / 5V / -5V (Switched)
Check the test points.

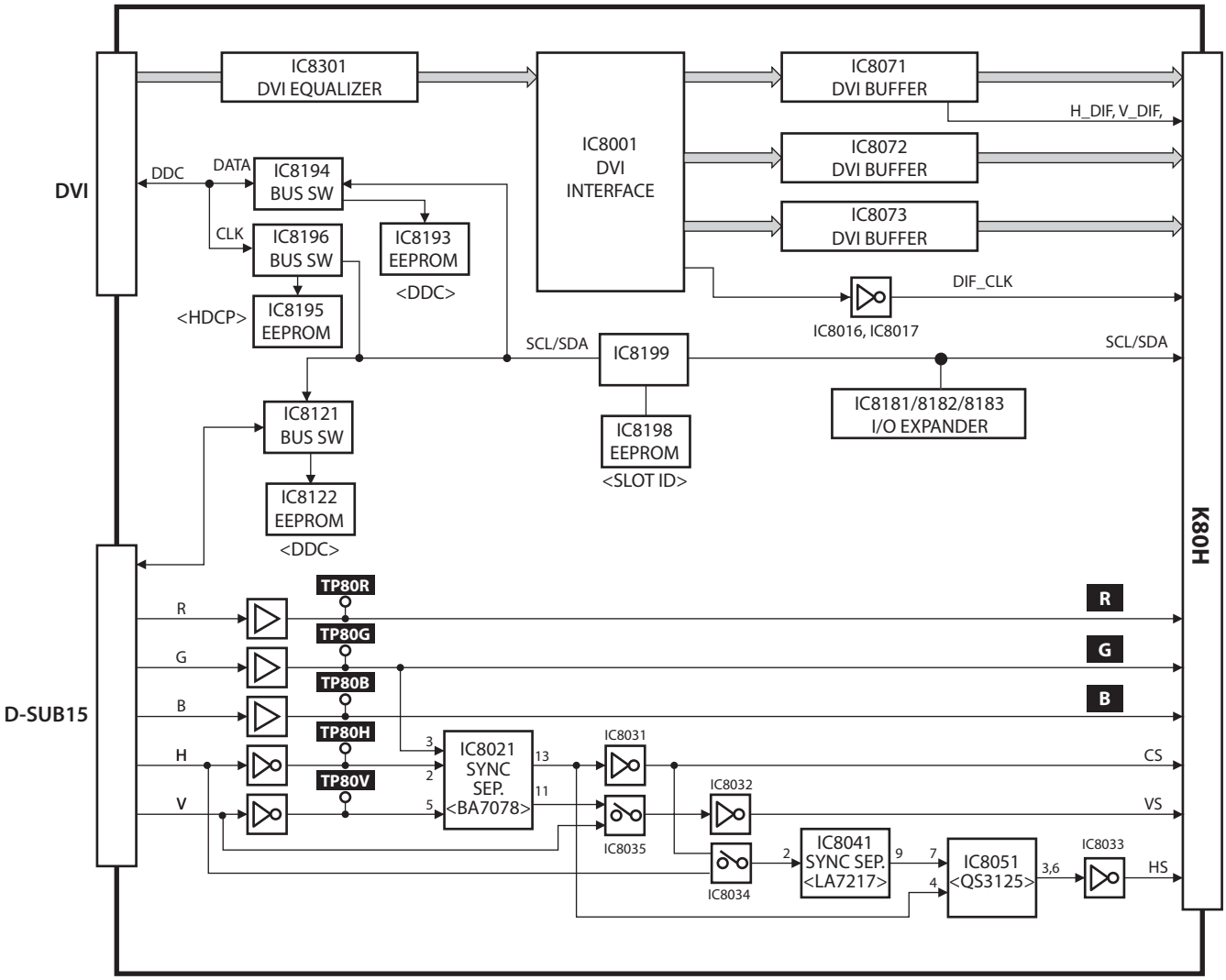

No Picture

Check the BNC terminals on the AV/DIV board.

Check the Vcc voltages.
S9V (Always)
9V / 5VB / -5V (Switched)
Check the test points.

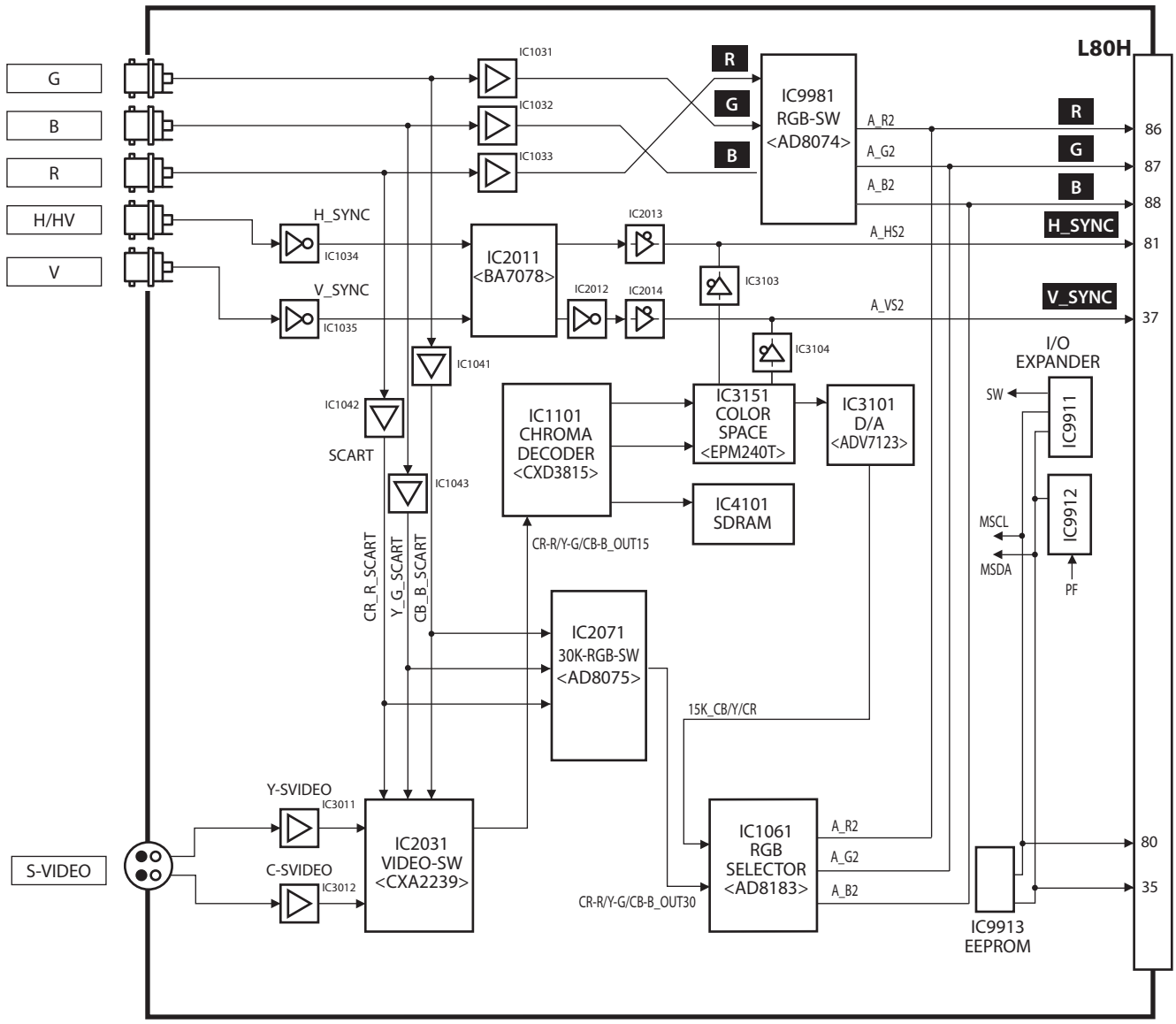

No Power

Are the LAMP indicator (red) and READY indicator (green) light?

If the LAMP and READY indicators are not light, check the primary circuit and S5V of standby power supply circuit.

Is the lamp cover attached correctly?

When the lamp cover is removed or not attached correctly, the projector cannot be turned on. Check the lamp cover and the lamp cover switch (SW902).
SW902--open: Abnormality

Check that POWER ON/OFF signal (IC_RESET_CPU) is correct.
L : Abnormality

Check that POWER FAIL signals are correct.
L : Abnormality

Check that IIC Bus signals are correct.

Check that Vcc voltages are correct.

IC801 CPU
IC5801 IO
POWER FAIL
R/C
RESET KEY
IC1881
BLAST_SW3/4
LAMP3/4
INDICATORS
12VA
SW902 LAMP COVER SW
SW903/904 THERMAL SW
IC1882 OPE AMP
DA CONVERTER
POWER FAIL
FAN CONTROL
FAN
PF_ FANS
IC886 PRESSURE SENSOR
TH901 TEMP. SENSOR
IC2541 TEMP. SENSOR
IC8801 TEMP. SENSOR
IIC
IC_RESET_CPU
POWER(DC)
FAN CONTROL
FAN
12V
Check 12V for PFC.
PF_PFC3/4
PF_TH
POWER
SWITCHING POWER SUPPLY
P.F.C. 1/2
BALLAST 1/2
AC INPUT
FUSE
MAINS SW
NOISE FILTER
PRIMARY CIRCUIT
LAMP-1/2

Is fuse (F901) blown?

Fuse may be opened when either LAMP indicator or READY indicator does not light. Check the fuse.
For safety, replace it with a new fuse of the same type

Check that PFC circuit on/off signals are correct.

Check that the Lamp ballast on/off signals are correct.

Check the temperature switches.

Occasionally, CPU may malfunction and need to be reset.

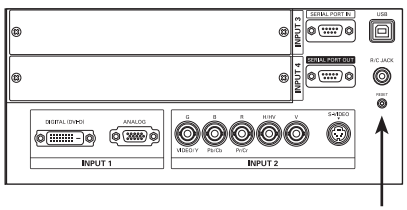

RESET for CPU
SW3801

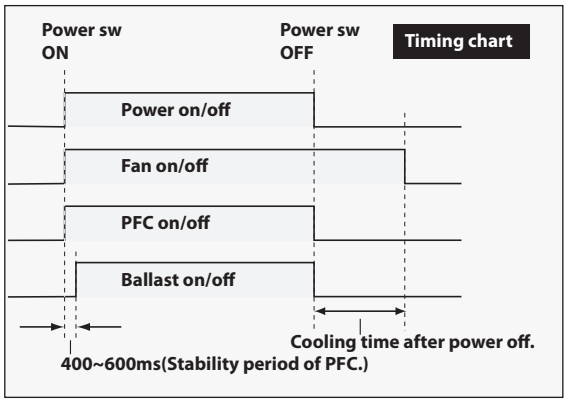

Power Supply and Power Fail Detection

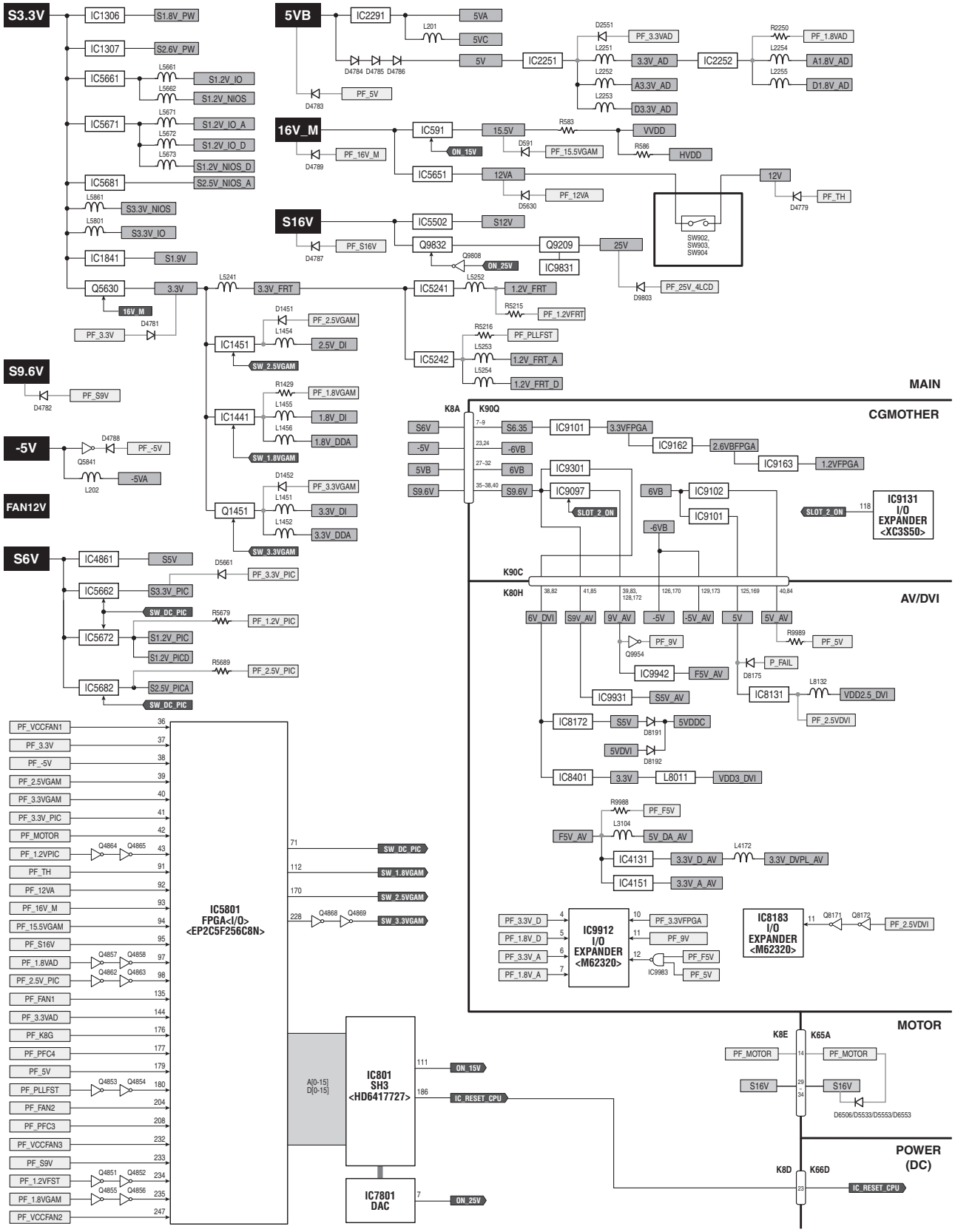

Power failure detection tree (1/2)

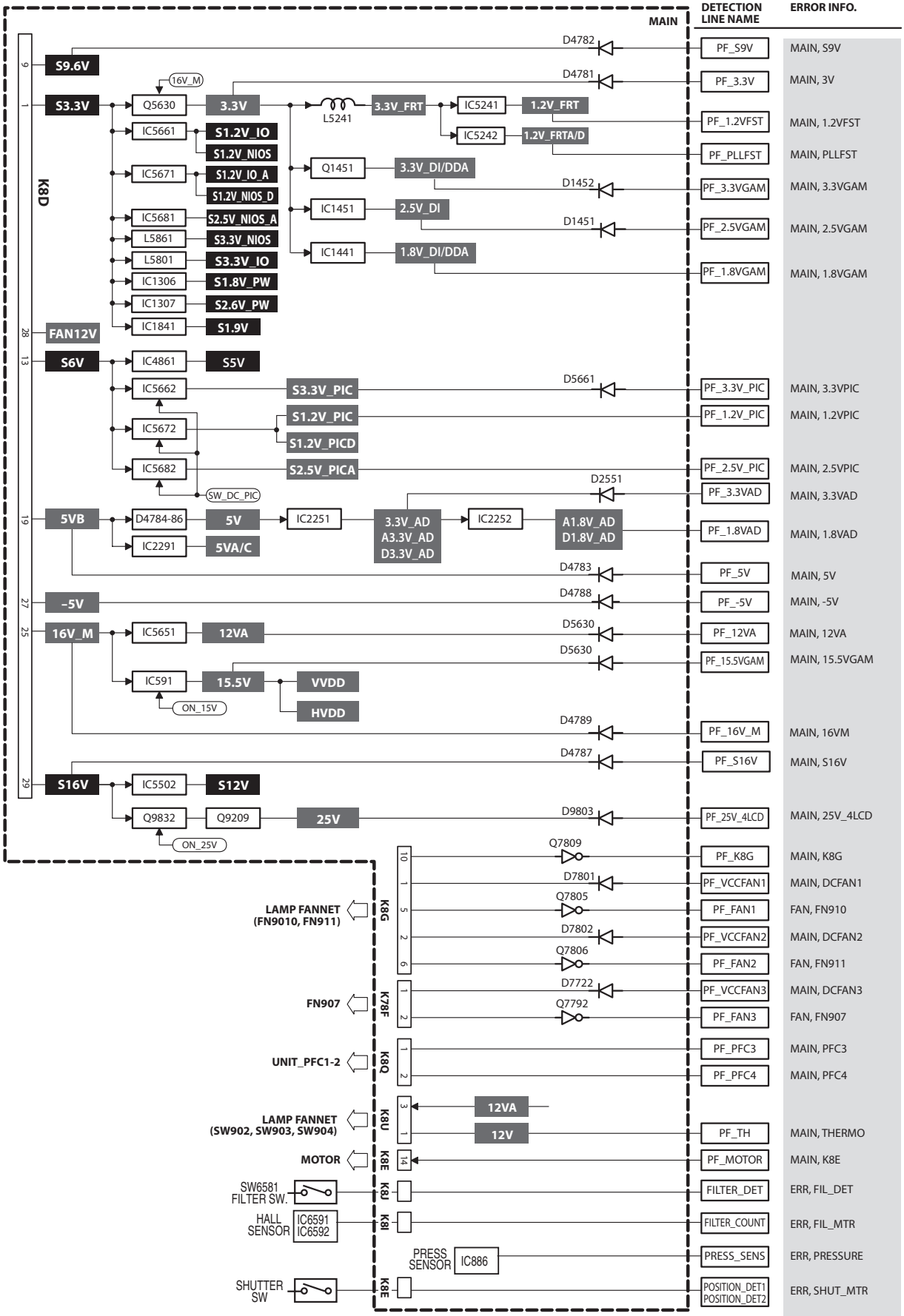

Power failure detection tree (2/2)

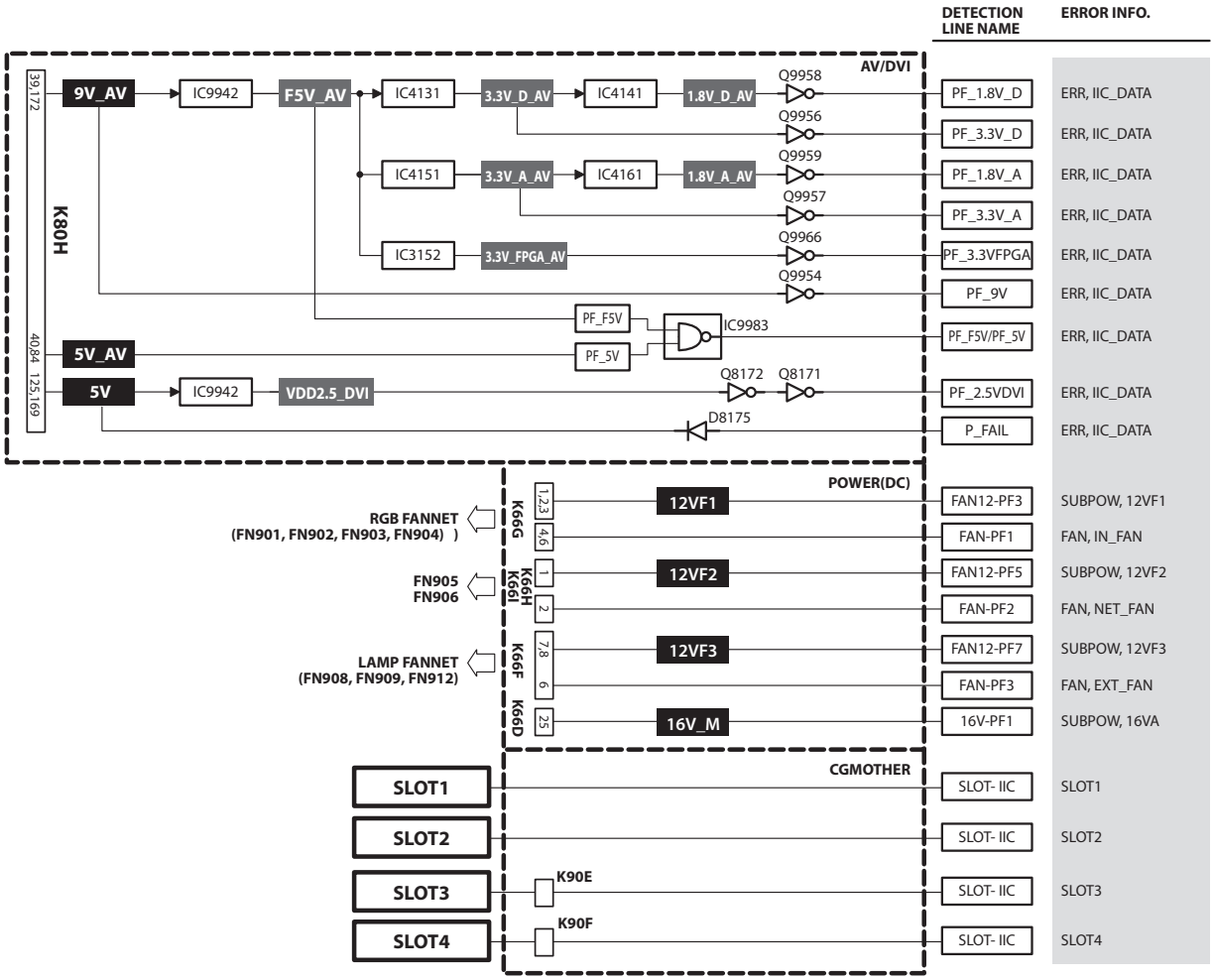

Power (DC) power supply system

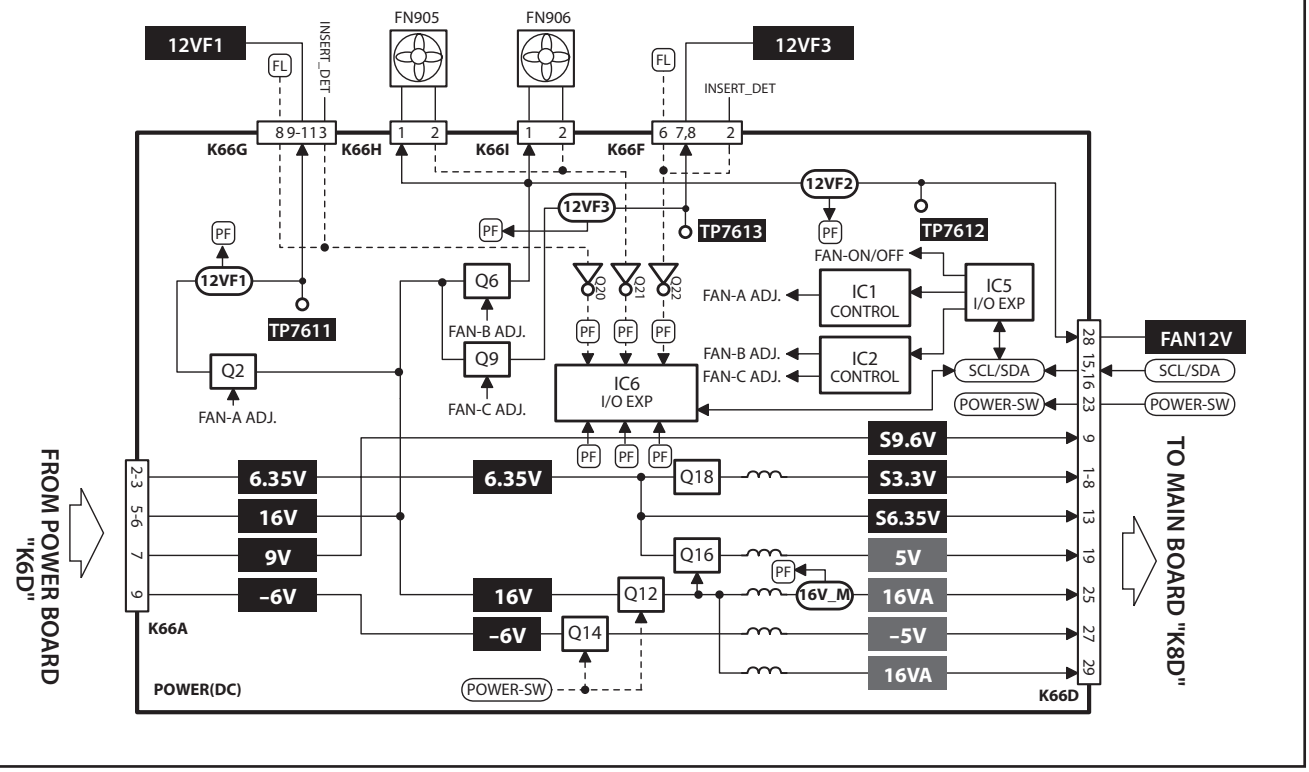

● Flow chart of projector condition

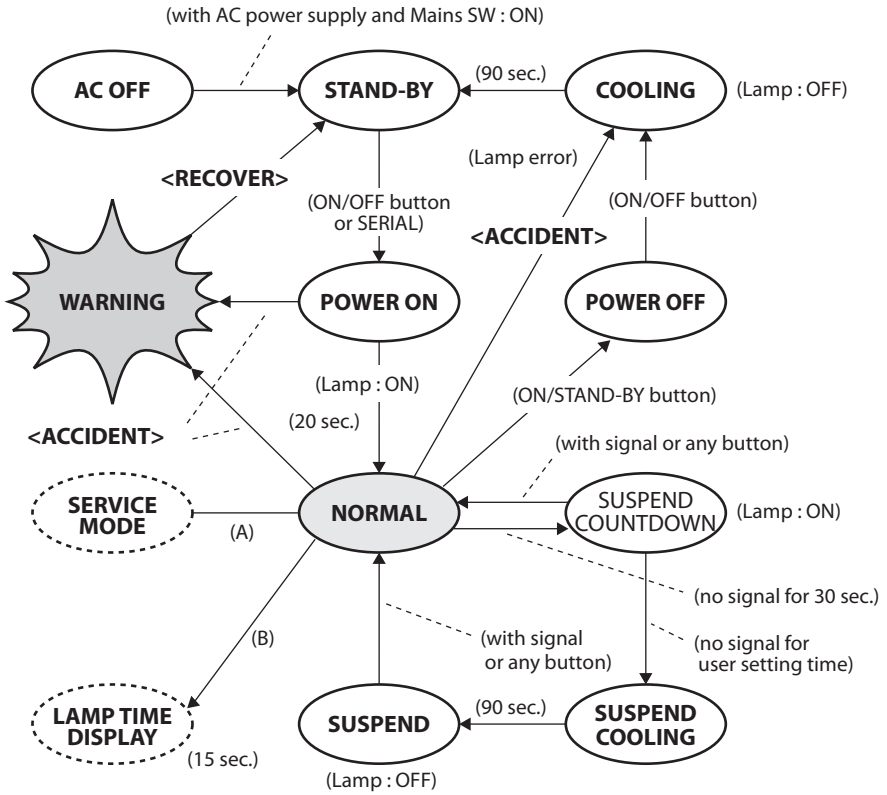

(A) : Press and hold MENU and SELECT buttons on the projector for more than 3 seconds

(B) : Press and hold POWER ON/STAND-BY button on the projector or on the remote control unit for more than 20 seconds.

Fan Control System

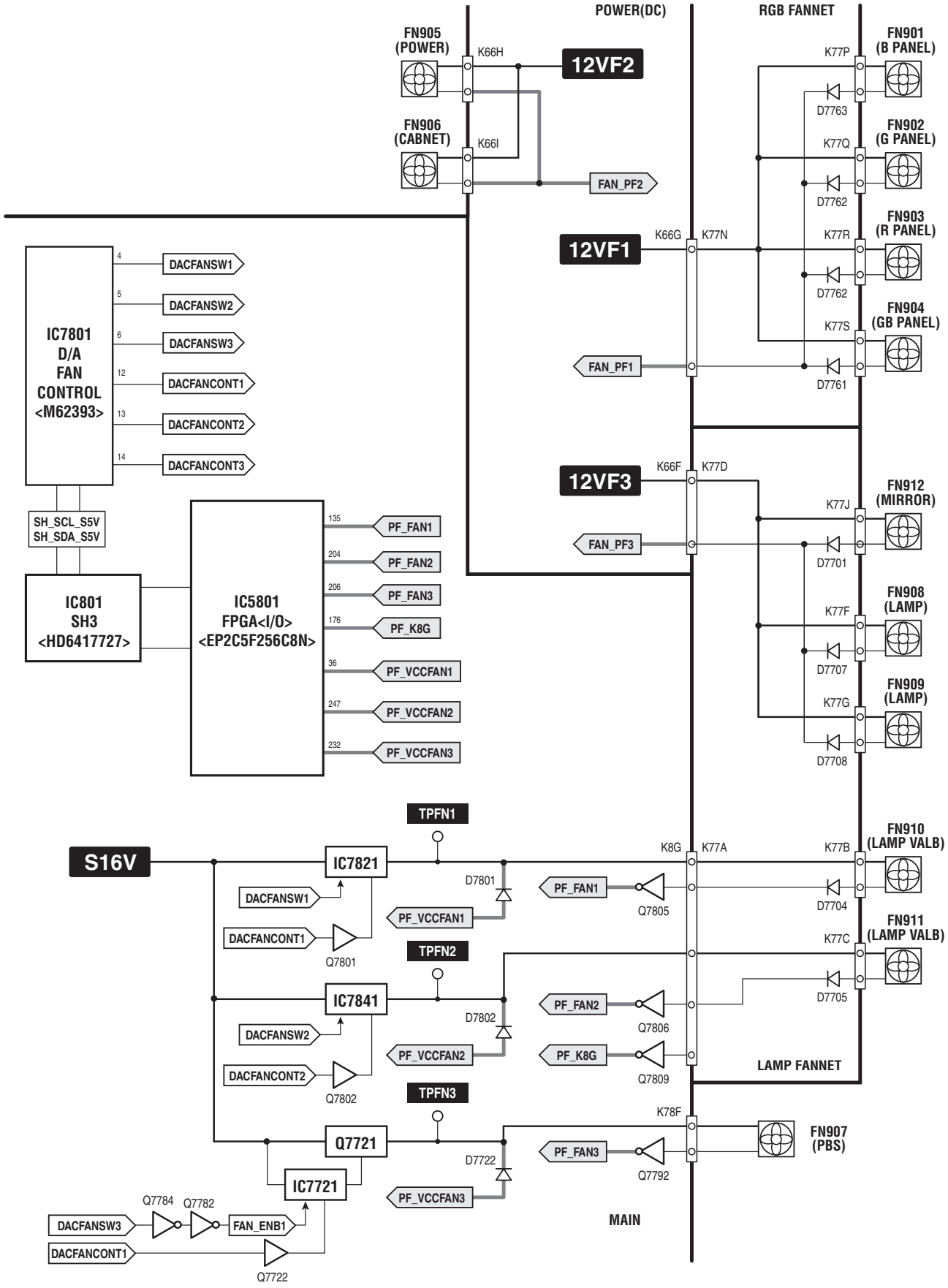

Temperature Abnormality

Temperature monitor operation
The temperature monitor system is provided to prevents damage of optical components (the LCD panel and polarization film etc.) inside a projector from overheat. Two protection systems are provided. Each system operation as follows :

The temperature monitor -1:

● **To control the air-flow of the cooling fans.**
The CPU checks the temperature and atmospheric pressure inside a projector. It checks a temperature using temperature sensors IC2541 and IC8811, and it checks an atmospheric pressure using pressure sensor-IC886. The CPU judges data from sensors and controls the air flow of the cooling fans so the temperature inside the projector is maintained to normal temperature.

● **To shut down the projector urgently.**
The CPU checks temperature of LCD panel periphery (TH901) and intake air (IC8811). If each part temperature reaches abnormal temperature, the CPU will turn off the projector, and will blink WARNING TEMP. indicator at intervals of 0.5 seconds. Cooling fans operate until temperature returns to normal. Indicator will stop blink, if temperature returns to normal.

The temperature monitor -2 :

● **Temperature check of lamps :**
Temperature switches (SW903, SW904) are placed near the lamps. Temperature switches will operate, if temperature reaches 100 ºC. When temperature switches become open, they cut off 12VA line, the power failure "PF_TH" signal become Low, and then the CPU will shut down the projector, and the LAMP indicator is lighting and other indicators are blinking.

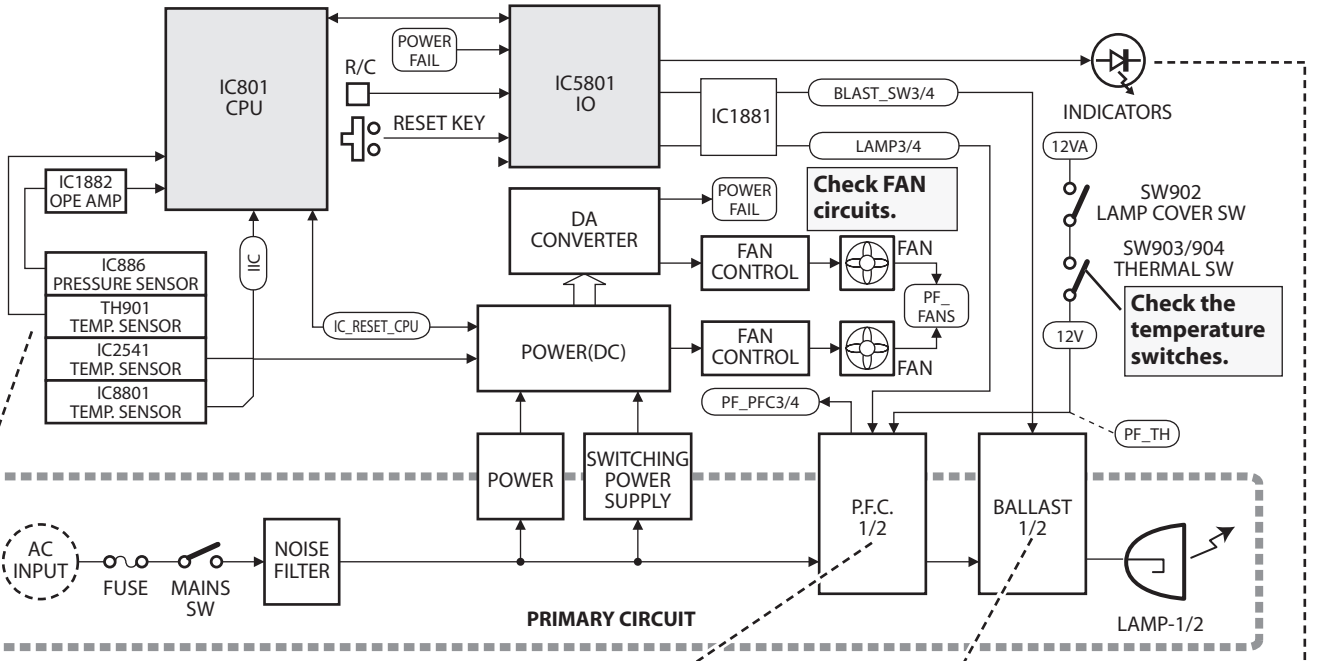

NOTE : SENSORS OPERATION

■ The sensor's operation is as follows:

IC886	: For FAN control
TH901	: Abnormal temperature detection
IC2541	: Inside air temperature monitor
IC8801	: Abnormal temperature detection and for FAN control

Temperature sensors location can be seen on "protections"(page-8).

The temperature switch is operated?

If the temperature around FET reaches 85 degrees, a PFC circuit will be shut down.

The temperature switch is operated?
When the temperature around a lamp driver reaches 85 degrees, the lamp ballast will be shut down and a lamp error signal changes from L to H.

LED indicators
When the internal temp error, the WARNING TEMP. indicator will be blinking.
When the temperature rises abnormally around the lamps1 or 2, the LAMP indicator is lighting and other indicators are blinking.

Power Lens and Shutter System and Abnormality

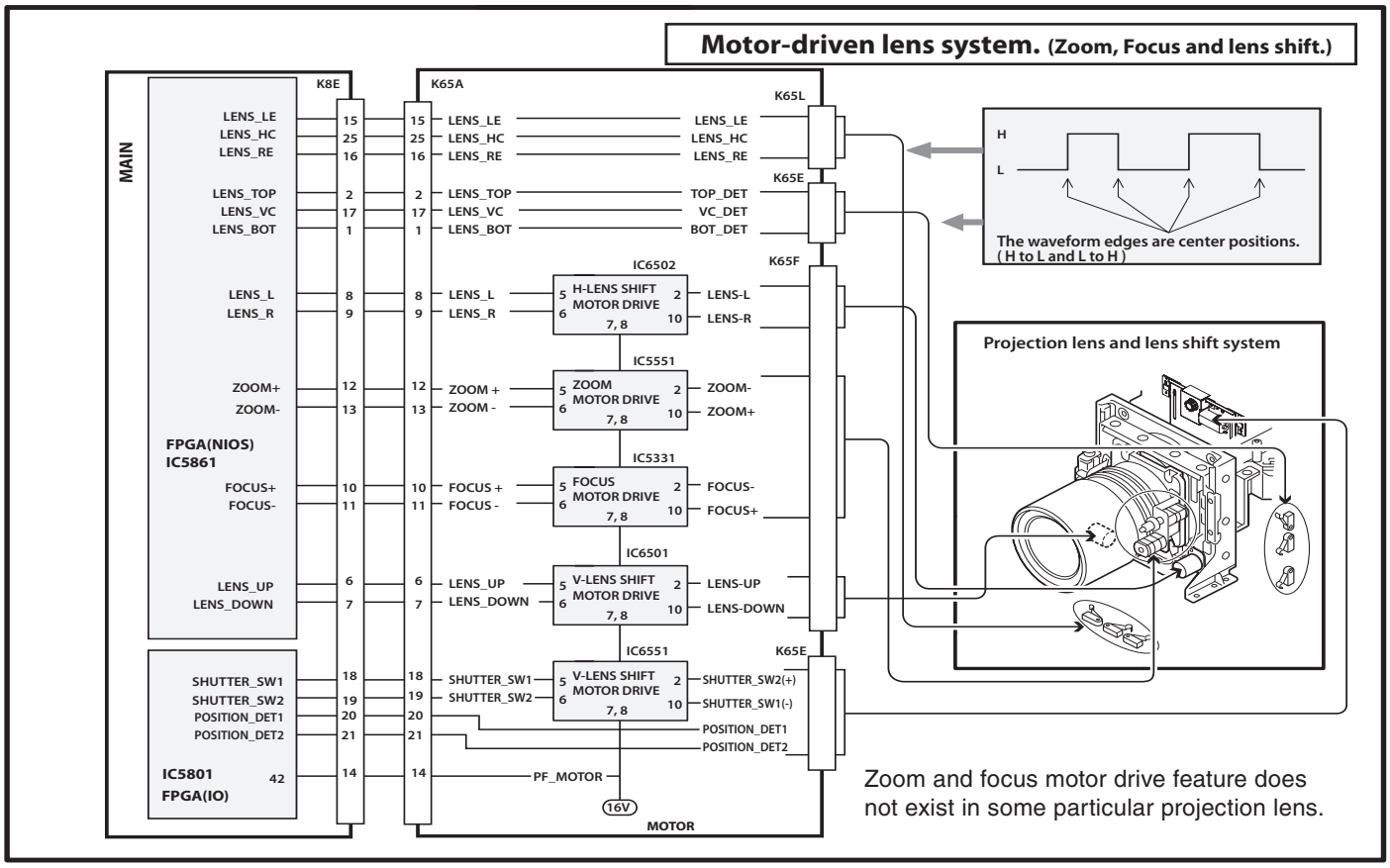

MAIN BOARD

1. Check that the Vcc-voltages are correct.
2. Check that the PF_MOTOR signal is correct.
   Pin14 of K8E H: Normal
3. Check that the LENS SHIFT up and down signals are correct.
   Pins 6 and 7 of K8E
4. Check that the LENS SHIFT left and right signals are correct.
   Pins 8 and 9 of K8E
5. Check that the FOCUS up and down signals are correct.
   Pins 10 and 11 of K8E
6. Check that the ZOOM up and down signals are correct.
   Pins 12 and 13 of K8E
7. Check that the LENS_TOP signal is correct.
   Pin 2 of K8E L : TOP
8. Check that the LENS_BOT signal is correct.
   Pin 1 of K8E L : BOTTOM
9. Check that the LENS_VC signal is correct.
   Pin 17 of K8E Center position=The edge of "H to L" or "L to H."
10. Check that the LENS_LE signal is correct.
    Pin 9 of K8N L : LEFT
11. Check that the LENS_RE signal is correct.
    Pin 10 of K8N L : RIGHT
12. Check that the LENS_VC signal is correct.
    Pin 11 of K8N Center position=The edge of "H to L" or "L to H."
13. Check that the SHUTTEER control signals are correct.
    Pins 18 and 19 of K8E
14. Check that the POSITION_DET1, POSITION_DET2 signals are correct.
    Pins 20 and 21 of K8E
    POSITION_DET1: L, POSITION_DET2: H : SHUTTER OPEN
    POSITION_DET1: H, POSITION_DET2: L : SHUTTER CLOSE

MOTOR BOARD

1. Check that the Vcc-voltages are correct.
2. Check that the PF_MOTOR signal is correct.
   Pin14 of K65A. H: Normal
3. Check that the LENS SHIFT up and down signals are correct.
   Pins 5 and 6 of IC6501.
4. Check that the LENS SHIFT left and right signals are correct.
   Pins 5 and 6 of IC6502.
5. Check that the FOCUS up and down signals are correct.
   Pins 5 and 6 of IC5531.
6. Check that the ZOOM up and down signals are correct.
   Pins 5 and 6 of IC5551.
7. Check that the LENS SHIFT motor drive signals are correct.
   Pins 10 and 2 of IC6501 and IC6502.
8. Check that the FOCUS motor drive signals are correct.
   Pins 10 and 2 of IC5531.
9. Check that the ZOOM motor drive signals are correct.
   Pins 10 and 2 of IC5551.
10. Check that the SHUTTER control signals are correct.
    Pins 5 and 6 of IC6551.
11. Check that the SHUTTER motor drive signals are correct.
    Pins 10 and 2 of IC6551.

Motor drive IC block diagram

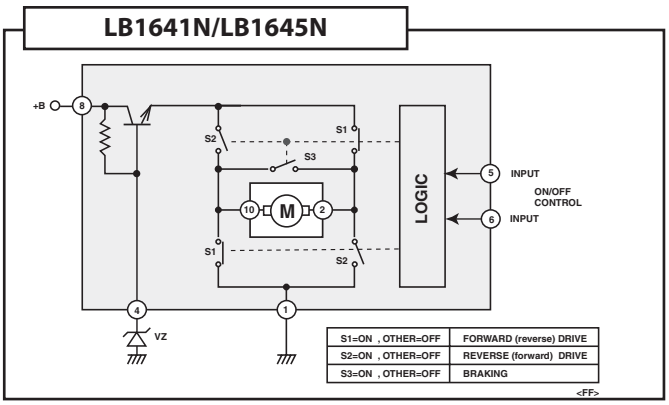

Truth table IC6501/IC6502/IC5531/IC5551/IC6551

Input		Output		Operation
5	6	2	10	
H	L	H	L	Forward(reverse) drive
L	H	L	H	Reverse(forward) drive
L	L	L	L	Braking

Lamp Abnormality

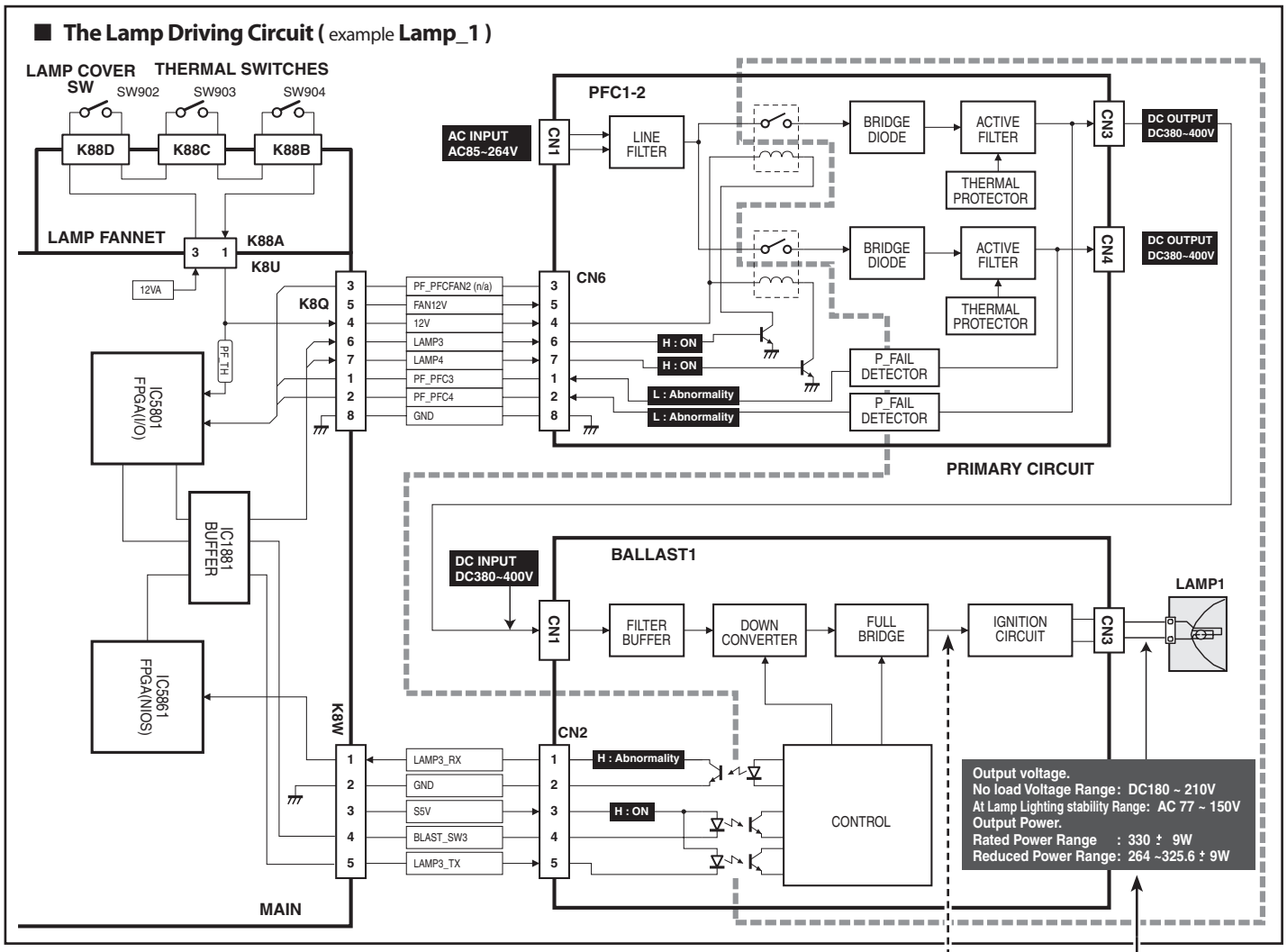

NOTE :

- ■ At first, the high-voltage pulse (about 8KVp-p) is generated between the lamp electrodes to generate glow discharge. Then dielectric breakdown occurs, finally glow discharge comes to arc discharge.
- ■ After projector turned on, 30 seconds are required until the light output stabilizes.
- ■ After the projector is turned off, the cooling fans operate for 90 seconds to cool down the lamp and reduce gas pressure inside the lamp.

■ When the temperature around a lamp driver reaches 85 degrees, unit lamp ballast will be shut down and a lamp monitor signal changes from L to H.

■ When the output voltage reaches abnormal voltage (exceeds AC 130V), lamp ballast board will be shut down and a lamp monitor signal changes from L to H.

NOTE :

■ **Lamp Cover Switch**

Make sure that the lamp cover is mounted correctly. If not or the lamp cover removed, the lamp does not light for safety.
Check the boss of the lamp cover and the lamp cover switch (SW902).

SW902 -- open : Abnormality

■ **Temperature Switches**

When the internal temperature near the lamps reaches near 90°C, the temperature switches open and 12V is not supplied to PFC1-2 board, also the Power fail signal "PF_TH" bocomes "Low".

SW903 - SW904 -- open : Abnormality

■ **READY (green) LED indicates lamp monitor operation**

LED off: Lamp is being cooled.
LED on: Lamp is being lit or already cooled down.

CPU : ---- Lamp monitor operation ----

- ■ The CPU performs an input check by the lamp monitor pin (LAMP_RX).
- ■ When the "H" signal continues 1 second or more continuously, the CPU judges the state to be abnormal.
- ■ When it has detected abnormal condition, the CPU turns off a projector compulsorily. And the CPU sets up the cooling time for 90 seconds.
- ■ The projector cannot be turned on during a cooling time.

Power failure detection system

Detection of Power failure

Projector provides a protection circuit to prevent the secondary failure when the power failure, fans failure or temperature failure occurs on the projector. The power failure detection lines "PF_5V", "PF_3.3V", etc. are connected to the power supply lines and fans. When the failure occurs, IC801<SH3, CPU> receives an error information through the ICs<I/O EXPANDER, IC5801, IC9912, etc.> and then outputs the signal "IC_RESET_CPU" from pin 186 to stop the power supply.

Error information table

IC	Pin	Signal Name	Connection Lines	Error Information	Failure Area
IC5801	36	PF_VCCFAN1	DC_FAN1	MAIN, DCFAN1	DC_FAN1 line, IC7821 on Main
	37	PF_3.3V	3.3V	MAIN, 3V	3.3V line on Main
	38	PF_-5V	-5V	MAIN, -5V	-5V line on Main, AV
	39	PF_2.5VGAM	2.5V_DI	MAIN, 2.5VGAM	2.5VGAM line on Main
	40	PF_3.3VGAM	3.3V_DI/DDA	MAIN, 3.3VGAM	3.3V_DI/DDA line on Main
	41	PF_3.3V_PIC	S3.3V_PIC	MAIN, 3.3VPIC	S3.3V_PIC line on Main
	42	PF_MOTOR	S16V	MAIN, K8E	S16V line on Motor Drive stage
	43	PF_1.2VPIC	1.2VPIC	MAIN, 1.2VPIC	S1.2VPIC, S1.2V_PICD line on Main
	91	PF_TH	12V, 12VA	MAIN, THERMO	SW902, Sw903, SW904, K8U
	92	PF_12VA	12VA	MAIN, 12VA	12VA line on Main
	93	PF_16V_M	16V_M	MAIN, 16VM	16V_M line on Main
	94	PF_15.5VGAM	15.5V	MAIN, 15.5VGAM	15.5V line on Main
	95	PF_S16V	S16V	MAIN, S16V	S16V, S12V line on Main
	97	PF_1.8VAD	A1.8V_AD, D1.8V_AD	MAIN, 1.8VAD	A1.8V_AD, D1.8V_AD line on Main
	98	PF_2.5V_PIC	S.5V_PICA	MAIN, 2.5VPIC	S2.5V_PICA line on Main
	135	PF_FAN1	FN910 FAN LOCK	FAN, FN910	Fan lock FN910
	144	PF_3.3VAD	3.3V_AD, A3.3V_AD, D3.3V_AD	MAIN, 3.3VAD	3.3V_AD, A3.3V_AD, D3.3V_AD line on Main
	176	PF_K8G	K8G	MAIN, K8G	Connection of K8G
	177	PF_PFC4	PFC4	MAIN, PFC4	PFC1-2 board
	179	PF_5V	5VB	MAIN, 5V	5VB line on Main
	180	PF_PLLFST	1.2V_FRTA/D	MAIN, PLLFST	1.2V_FRTA/D line on Main
	204	PF_FAN2	FN911 FAN LOCK	FAN, FN911	Fan lock FN911
	206	PF_FAN3	FN907 FAN LOCK	FAN, FN907	Fan lock FN907
	207	PF_25V_4LCD	25V	MAIN, 25V_4LCD	25V line, S16V line on Main
	208	PF_PFC3	PFC3	MAIN, PFC3	PFC1-2 board
	232	PF_VCCFAN3	FAN_D3	MAIN, DCFAN3	FAN_D3 line, Q7721 on Main
	233	PF_S9V	S9.6V	MAIN, S9V	S9.6V line one Main
	234	PF_1.2VFST	1.2V_FRT	MAIN, 1.2VFST	1.2V_FRT line on Main
	235	PF_1.8VGAM	1.8V_DI/DDA	MAIN, 1.8VGAM	1.8V_DI_DDA line on Main
	247	PF_VCCFAN2	DC_FAN2	MAIN, DCFAN2	DC_FAN2 line, IC7841 on Main
IC9912	4	PF_3.3V_D	3.3V_D_AV	ERR, IIC_DATA	3.3V_D_AV line on AV/DVI
	5	PF_1.8V_D	1.8V_D_AV	ERR, IIC_DATA	1.8V_D_AV line on AV/DVI
	6	PF_3.3V_A	3.3V_A_AV	ERR, IIC_DATA	3.3V_A_AV line on AV/DVI
	7	PF_1.8V_A	1.8V_A_AV	ERR, IIC_DATA	1.8V_A_AV line on AV/DVI
	10	PF_3.3VFPGA	3.3V_FPGA_AV	ERR, IIC_DATA	3.3V_FPGA_AV line on AV/DVI
	11	PF_9V	9V_AV	ERR, IIC_DATA	9V_AV line on AV/DVI, CGMother
	12	PF_F5V/PF_5V	F5V_AV / 5V_AV	ERR, IIC_DATA	F5V_AV, 5V_AV line on AV/DVI
IC8181	6	P_FAIL	5V	ERR, IIC_DATA	5V line on AV/DVI, CGMother
IC8183	11	PF_2.5VDVI	VDD2.5_DVI	ERR, IIC_DATA	VDD2.5V_DVI line on AV/DVI
IC6	4	16V-PF1	16V_M	SUBPOW, 16VA	16V_M line on Power(DC)
	6	FAN12-PF3	12VF1	SUBPOW, 12VF1	12VF1 line on Power(DC), RGB Fan Net
	7	FAN-PF1	K66G FAN LOCK	FAN, IN_FAN	Fan lock FN901, FN902, FN903, FN904, K66G Connection
	9	FAN12-PF5	12VF2	SUBPOW, 12VF2	12VF2 line on Power(DC)
	10	FAN-PF2	K66H/K66I FAN LOCK	ERR, NET_FAN	Fan lock FN905, FN906
	11	FAN12-PF7	12VF3	SUBPOW, 12VF3	12VF3 line on Power(DC), Lamp Fan Net
	12	FAN-PF3	K66F FAN LOCK	ERR, EXT_FAN	Fan lock, FN908, FN909, FN912, K66F

Error History Log

This projector provides the error history log function. To check the logs, you need to enter the service mode and select Group No. "**91**" and Item No. "**0**" to "**49**". The error code is displayed on the Data column. The description of the error code is listed on the table below.

* How to enter the service mode and select the group, item and data value, see "Service Adjustment Menu Operation".

Group No.	Item No.	Data (Error Code)
91	0	✻ <- Latest Error
	1	✻
	2	✻
	3	✻
	:	:
	:	:
	49	✻

Error	Error Code	Error Infomation (See Powe Failure Detection Tree)	Error Code	Error Infomation (See Powe Failure Detection Tree)
Normal	0	-		
Power Failure	1000	MAIN, 5V	1023	MAIN, 25V_4LCD
	1001	MAIN, -5V	1024	MAIN, K8G
	1002	MAIN, 3V	1025	MAIN, PFC3
	1003	MAIN, S9V	1026	MAIN, PFC4
	1004	MAIN, S16V	1027	MAIN. DCFAN1
	1005	MAIN, 16VM	1028	MAIN. DCFAN2
	1006	MAIN, 12VA	1029	MAIN. DCFAN3
	1007	MAIN, 1.8VAD	1030	ERR, PRESSURE
	1008	MAIN, 3.3VAD	1031	ERR, FIL_DET
	1009	MAIN, 1.2VFST	1032	ERR, FIL_MTR
	1010	MAIN, PLLFST	1033	ERR, SHUT_MTR
	1011	MAIN, 1.2VPIC	1034	ERR, EXT_FAN
	1012	MAIN, 2.5VPIC	1035	SUBPOW, 12VF3
	1013	MAIN, 3.3VPIC	1036	FAN, NET_FAN
	1014	MAIN, 1.8VGAM	1037	SUBPOW, 12VF2
	1015	MAIN, 2.5VGAM	1038	FAN, IN_FAN
	1016	MAIN, 3.3VGAM	1039	SUBPOW, 12VF1
	1017	MAIN, 15.5VGAM	1040	SUBPOW, 16VA
	1018	MAIN, K8E	1041	ERR, IIC_DATA
	1019	MAIN, THERMO	1042	SLOT1
	1020	FAN, FN910	1043	SLOT2
	1021	FAN, FN911	1044	SLOT3
	1022	FAN, FN907	1045	SLOT4
Temperature Error	2000	Temperature Error detected on the Sensor (IC8811) (Arround the Intake Duct)		
	2001	Error of the detection (IC8811 communication error)		
	2100	Error of the detection (IC2541 communication error)		
	2200	Temperature Error detected on the Sensor (IC8811) and Thermister (TH901)		
Lamp Error	3000	Lamp1 fails on		
	3001	Lamp1 goes out		
	3002	Communication Error on Lamp1		
	3100	Lamp2 fails on		
	3101	Lamp2 goes out		
	3102	Communication Error on Lamp2		
System Error	4000	FPGA IO, NIOS Config Error		
	4001	FPGA MOTHER Config Error		
	4002	FPGA SW, FINE Config Error		
	4003	PW DPORT OUT Error		

How to reset the Error History Log

1. Enter the Service Mode, and select Group No. "**91**" and Item No. "**50**".
2 The history log will be reset when the Data Value is set to "**10**". The value automatically returns to "0".

* How to enter the service mode and select the group, item and data value, see "Service Adjustment Menu Operation".

Diagnosis of Power Failure with RS-232C port

This projector provides a function to get the error information of the projector by using the RS-232C serial port for the power failure diagnosis.
The further error information of the power failure and fan failure can be found out by using this function.

Diagnosis procedure

1 Connect a RS-232C serial cross cable to SERIAL PORT IN on the projector and serial port on the PC.
2 Launch a communication software provided with PC and setup the communication condition as follows;

Baud rate	: 9600 / 19200 bps
Parity check	: none
Stop bit	: 1
Flow control	: none
Data bit	: 8

3 Turn on the projector. Check that the LED shows a power failure. (All the LEDs except LAMP LED are blinking)
4 Type a diagnosis command of the power failure “CR ALLPFAIL” and press a "ENTER" key within 1 second on the command window of the software.
The error information will be listed on the window as the right.
Check the status column. If “NG” is listed, the power failure occurs on its signal line (Power Line Name). In case of the right table, this error information means that the power failure occurs on the 3V power supply on Main board. Check if the parts connected to 3V power supply line are defective.

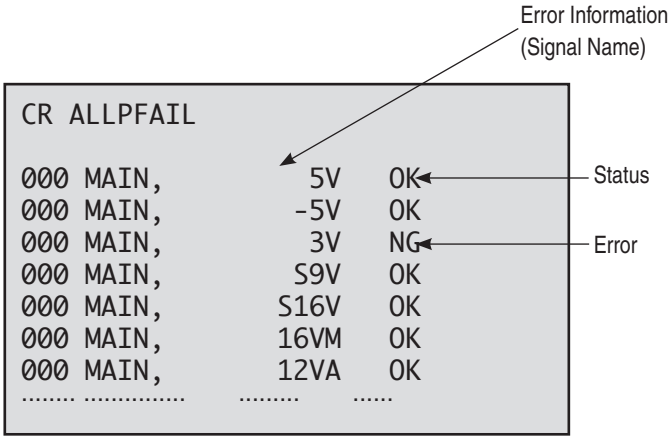

Also the error information may be listed multiple as the below;
In the above case, 2 kinds of causes are considered. One is the power failure occurs on the multiple places at the same time, other is a power failure affects multiple power supply lines even if the failure occurs on the single place.
In the first case, Check if the parts connected to the multiple power supply lines are defective. In the later case, determine a failure point referring to the power supply flow chart on previous page. Basically, if the power failure occurs on the upper side of power supply, the power failure is also detected on lower side of power supply frequently. If the failure occurs on the lower side of power supply, it is lightly affected to the upper side of the power supply. In the above case, because the failure occurs on the 16V_M power supply on the main board, the failure is also detected on the 12VA power supply on the main board.

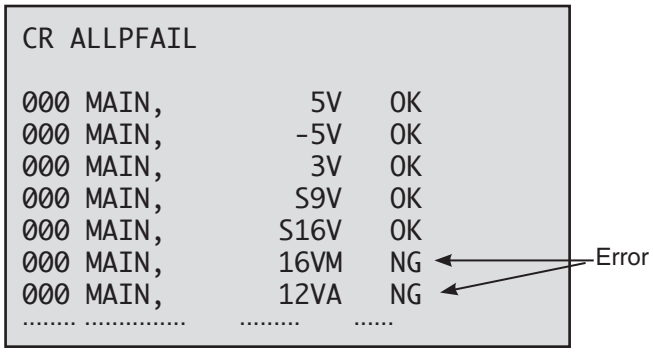

* See "Power Failure Detection Tree" for further description of the Error Information.

Indicators and Projector Condition

Check the indicators for the projector condition.

The projector is operating normally.

Indicators						Projector Condition
LAMP red	READY green	WARNING TEMP. red	WARNING FILTER orange	SHUTTER blue	LAMP 1/2 REP. orange	
●	●	●	●	●	●	The projector is off. (The main On/Off switch is OFF position or the AC power cord is unplugged.)
○	○	●	✻	✻	✻	The projector is in stand-by mode. Press the ON/STAND-BY button to turn on the projector.
◐	○	●	✻	●	✻	The projector is operating normally. (The Shutter is open)
◐	○	●	✻	○	✻	The projector is operating normally. (The Shutter is closed)
○	●	●	✻	✻	✻	The projector is preparing for stand-by or the projection lamp is being cooled down. The projector cannot be turned on until cooling is completed and the READY indicator lights green.
◐	●	●	✻	●	✻	The projection lamp is being cooled down in the Power management mode.
◐	⊘	●	✻	●	✻	The projector is in the Power management mode.
◐	●	●	✻	○	✻	The projection lamp is being cooled down in the Shutter management mode.
◐	○	●	✻	○	✻	The projector is in the Shutter management mode. Press the ON/STAND-BY button to turn on the projector.
◐	○	●	◎	✻	✻	The filter is scrolled using the FILTER button on the remote control or the Filter control function in the setting menu. When the filter is being scrolled, the Filter replacement icon and “Please wait...” message (Fig. 1) appear on the screen.

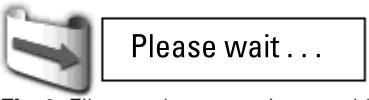

Fig.1 Filter replacement icon and “Please wait...”

○ • • • on

◐ • • • dim

● • • • off

○ • • • blinking at the normal rate (approx. 1 second ON, 1 second OFF)

⊘ • • • blinking fast (approx. 0.5 seconds ON, 0.5 seconds OFF)

◎ • • • blinking slow (approx. 2 seconds ON, 2 seconds OFF)

✻ • • • Differs according to conditions.

The projector is detecting abnormal condition.

Indicators						Projector Condition
LAMP red	READY green	WARNING TEMP. red	WARNING FILTER orange	SHUTTER blue	LAMP 1/2 REP. orange	
●	○	◎	*	*	*	The temperature inside the projector is elevated close to the abnormally high level.
○	●	⊘	*	*	*	The temperature inside the projector is abnormally high. The projector cannot be turned on. When the projector is cooled down enough and the temperature returns to normal, the READY indicator lights green and the projector can be turned on. (The WARNING TEMP. indicator keeps blinking.) Check and replace the filter.
○	○	⊘	*	*	*	The projector has been cooled down enough and the temperature returns to normal. When turning on the projector, the WARNING TEMP. indicator stops blinking. Check and replace the filter.
○	●	●	*	*	○	The lamp cannot light up. (The projector is preparing for stand-by or the projection lamp is being cooled down. The projector cannot be turned on until cooling is completed.)
○	○	●	*	*	○	The lamp cannot light up. (The lamp has been cooled down enough and the projector is in stand-by mode and ready to be turned on with the ON/STAND-BY button.)
●	○	*	*	*	○	When either of the 2 lamps is out, the projector operates with 1 lamp.
*	*	*	*	*	○	The lamp has been used overtime. Replace the lamp immediately and then reset the lamp counter. The indicator will be turned off after resetting the counter.

WARNING FILTER

When the filter detects clogging, reaches a time set in the timer setting or runs out of the filter scroll, the WARNING FILTER indicator lights orange. When this indicator lights orange, replace the filter or the filter cartridge with a new one promptly. Reset the Filter counter and Scroll counter after replacing the filter cartridge.

LAMP REPLACE 1 and 2

When the LAMP 1 REPLACE indicator and the LAMP 2 REPLACE indicator light orange, replace the projection lamps with new ones promptly. And then reset the Lamp time after replacement of the lamps.

The projector is detecting abnormal condition.

Indicators						Projector Condition
LAMP red	READY green	WARNING TEMP. red	WARNING FILTER orange	SHUTTER blue	LAMP 1/2 REP. orange	
●	○	●	○	*	*	If the Filter counter reached a time set in the timer setting, a Filter replacement icon (Fig.2) appears on the screen and the WARNING FILTER indicator on the top panel lights up. Replace the filter as soon as possible. If the filter is out of scroll and the projector reaches a time set in the timer setting, Fig. 3 appears on the screen and the WARNING FILTER indicator lights up. Replace the filter cartridge as soon as possible. If the filter is clogged and no scroll is left in the filter cartridge, a Filter cartridge replacement icon (Fig.4) appears on the screen and the WARNING FILTER indicator lights up. Replace the filter cartridge as soon as possible. ✔**Note:** •Fig.2, Fig.3 and Fig.4 icon will not appear when the Display function is set to "Off" (p.48), or during "Freeze" (p.29).
●	○	●	⊘	*	*	The projector detects an abnormal condition during filter scroll.
○	●	●	⊘	*	*	The projector is being cooled down after detecting an abnormal condition during filter scroll.
○	○	●	⊘	*	*	The projector has been cooled down enough and is in the stand-by mode after detecting an abnormal condition during filter scroll.
○	⊘	⊘	⊘	⊘	⊘	The filter cartridge is not installed in the projector. Check the filter compartment to see if the filter cartridge is installed in the projector. When the filter cartridge is installed and the indicators continue to light and blink, read the column below. The projector detects an abnormal condition and cannot be turned on. Unplug the AC power cord and plug it again to turn on the projector. If the projector is turned off again, unplug the AC power cord and contact the dealer or the service center. Do not leave the projector on. It may cause an electric shock or a fire hazard.
*	*	*	*	⊘	*	The shutter is out of control.
○	●	●	*	⊘	*	The shutter is out of control. (The projector is in the cooling mode.)
○	○	●	*	⊘	*	The shutter is out of control. (The projector is in the stand-by mode.) In that case, contact the service station immediately.

Fig.2 Filter replacement icon

Fig.3

Fig.4 Filter cartridge replacement icon

Serial Control

Serial Control Interface

This projector provides a function to control and monitor the projector's operations by using the RS-232C serial port.

Operation

1 Connect a RS-232C serial cross cable to SERIAL PORT IN on the projector and serial port on the PC.

2 Launch a communication software provided with PC and setup the communication condition as follows:

Baud rate	: 9600 / 19200 bps
Parity check	: none
Stop bit	: 1
Flow control	: none
Data bit	: 8

3 Type the command for controlling the projector and then enter the "Enter" key.
Example
When you want to change the input to INPUT 2, Type 'C' '0' '6' 'Enter'.

Note:
- The default of the baud rate is set to 19200 bps. If an error occurs in the communication, change the serial port and the communication speed (baud rate).
- Enter with ASCII 64-byte capital characters and one-byte characters.

Functional Execution Command

Format

The command is sent from PC to the projector with the format below;
'C' [Command] 'CR'
Command: two characters (refer to the command table below.
- The projector decodes the command and returns the 'ACK' with the format below;
'ACK' 'CR'
- When the projector cannot decode the command, it returns with format below.
'?' 'CR'

Command	Function
C00	Turn the projector ON
C01	Turn the projector OFF (immediately OFF)
C05	Select Input 1
C06	Select Input 2
C07	Select Input 3
C08	Select Input 4
C0D	Video mute ON
C0E	Video mute OFF
C0F	Aspect 4:3
C10	Aspect 16:9
C1C	Menu ON
C1D	Menu OFF
C3A	Pointer RIGHT

Command	Function
C3B	Pointer LEFT
C3C	Pointer UP
C3D	Pointer DOWN
C3F	Enter
C46	Zoom DOWN
C47	Zoom UP
C4A	Focus DOWN
C4B	Focus UP
C5D	Lens shift UP
C5E	Lens shift DOWN
C5F	Lens shift LEFT
C60	Lens shift RIGHT
C89	Auto PC Adj.
C8E	Keystone UP
C8F	Keystone DOWN
C90	Keystone RIGHT
C91	Keystone LEFT

Status Read Command

Format

The command is sent from PC to the projector with the format below;

'CR' [Command] 'CR'

Command: one character (refer to the command table below.

The projector decodes the command and returns the 'Character string' with the format below;

Command	Function	Projector Return	Projector status
CR0	Status Read	00	Power On
		80	Stand-by mode
		40	Countdown
		20	Cooling down
		10	Power Malfunction
		28	Cooling down at the temperature anomaly
		02	Unable to receive the RC232C command.
		24	Cooling down at Power Management mode
		04	Power Management mode after Cooling down
		21	Cooling down after the projector is turned off when the lamps are out.
		81	Stand-by mode after Cooling down when the lamps are out.
		88	Stand-by mode after Cooling down at the temperature anomaly.
		2C	Cooling down when the projector is turned off by the shutter management function.
		8C	Stand-by mode after Cooling down by the shutter management function.
CR6	Temperature Read	S1 S2 S3	S1 = Temperature at Sensor 1 (˚C) S2 = Temperature at Sensor 2 (˚C) S3 = Temperature at Sensor 3 (˚C) (ex.) S1 = 12.3˚C, S2 = 23.4˚C, S3 = 34.5˚C --> The projector displays “12.3 23.4 34.5” (For each sensor, two digit and the tenth place numbers are displayed with a space between each temperature.)
		?	Communication failure

The tables show the typical command lists for controlling the projector. Please consult your local dealer for further information of other commands.

Control Port Functions

● CPU SH3 (IC801)

PIN NO.	NAME	FUNCTION NAME	FUNCTION	POLARITY	I/O
1	Vcc - RTC	1.9V			
2	XTAL2	not used			O
3	EXTAL2	1.9V	Crystal Oscilator (Internal RTC)		I
4	Vss - RTC	GND			
5	MD1	MD1	Setting Clock Mode [Default : L]		I
6	MD2	MD2	Setting Clock Mode [Default : L]		I
7	NMI	NMI	Nonmaskable Interrupt Request		I
8	IRQO / IRL0 / PTH[0]	FPGA_INTR	FPGA Interrupt		I
9	IRQ1 / IRL1 / PTH[1]	not used	External interrupt request/External interrupt request/Inport H(1)		I / I / I
10	IRQ2 / IRL2 / PTH[2]	VSYNC_INTR	lcd Panel Drive V - Sync Interrupt	Active L	I
11	IRQ3 / IRL3 / PTH[3]	SH_INT_DPRAM	Dual Port RAM Interrupt	Active L	I
12	IRQ4 / PTH [4]	R/C	Remote Control Signal Input	Active L	i
13	VEPWC	not used	LCD Panel VEE Control Terminal		O
14	VCPWC	not used	LCD Panel VCC Control Terminal		O
15	MD5	MD5		Always L	I
16	BREQ	not used	Bus Request		I
17	BACK	not used	Bus Acknowledge		O
18	VssQ	GND			
19	CKIO2	not used	System Clock Output		O
20	VccQ	3.3V			
21	D31 / PTB[7]	SH_D31	Data bus		I / O
22	D30 / PTB[6]	SH_D30	Data bus		I / O
23	D29 / PTB[5]	SH_D29	Data bus		I / O
24	D28 / PTB[4]	SH_D28	Data bus		I / O
25	D27 / PTB[3]	SH_D27	Data bus		I / O
26	D26 / PTB[2]	SH_D26	Data bus		I / O
27	D25 / PTB[1]	SH_D25	Data bus		I / O
28	D24 / PTB[0]	SH_D24	Data bus		I / O
29	VssQ	GND			
30	D23 / PTA[7]	SH_D23	Data bus		I / O
31	VccQ	3.3V			
32	D22 / PTA[6]	SH_D22	Data bus		I / O
33	D21 / PTA[5]	SH_D21	Data bus		I / O
34	D20 / PTA[4]	SH_D20	Data bus		I / O
35	Vss	GND			
36	D19 / PTA[3]	SH_D19	Data bus		I / O
37	Vcc	1.9V			
38	D18 / PTA[2]	SH_D18	Data bus		I / O
39	D17 / PTA[1]	SH_D17	Data bus		I / O
40	D16 / PTA[0]	SH_D16	Data bus		I / O
41	D15	SH_D15	Data bus		I / O
42	VssQ	GND			
43	D14	SH_D14	Data bus		I / O
44	VccQ	3.3V			
45	D13	SH_D13	Data bus		I / O
46	D12	SH_D12	Data bus		I / O
47	D11	SH_D11	Data bus		I / O
48	D10	SH_D10	Data bus		I / O
49	D9	SH_D9	Data bus		I / O
50	D8	SH_D8	Data bus		I / O
51	D7	SH_D7	Data bus		I / O
52	D6	SH_D6	Data bus		I / O
53	VssQ	GND			
54	D5	SH_D5	Data bus		I / O
55	VccQ	3.3V			
56	D4	SH_D4	Data bus		I / O
57	D3	SH_D3	Data bus		I / O
58	D2	SH_D2	Data bus		I / O
59	D1	SH_D1	Data bus		I / O
60	D0	SH_D0	Data bus		I / O
61	A0	SH_A0	Adress bus		O
62	A1	SH_A1	Adress bus		O
63	A2	SH_A2	Adress bus		O
64	VssQ	GND			
65	A3	SH_A3	Adress bus		O
66	VccQ	3.3V			
67	A4	SH_A4	Adress bus		O
68	A5	SH_A5	Adress bus		O

Control Port Functions

PIN NO.	NAME	FUNCTION NAME	FUNCTION	POLARITY	I/O
69	A6	SH_A6	Adress bus		O
70	A7	SH_A7	Adress bus		O
71	A8	SH_A8	Adress bus		O
72	A9	SH_A9	Adress bus		O
73	A10	SH_A10	Adress bus		O
74	A11	SH_A11	Adress bus		O
75	VssQ	GND			
76	A12	SH_A12	Adress bus		O
77	VccQ	3.3V			
78	A13	SH_A13	Adress bus		O
79	A14	SH_A14	Adress bus		O
80	A15	SH_A15	Adress bus		O
81	A16	SH_A16	Adress bus		O
82	A17	SH_A17	Adress bus		O
83	A18	SH_A18	Adress bus		O
84	A19	SH_A19	Adress bus		O
85	A20	SH_A20	Adress bus		O
86	VssQ	GND			
87	A21	SH_A21	Adress bus		O
88	VccQ	3.3V			
89	A22	SH_A22	Adress bus		O
90	A23	SH_A23	Adress bus		O
91	Vss	GND			
92	A24	SH_A24	Adress bus		O
93	Vcc	1.9V			
94	A25	SH_A25	Adress bus		O
95	BS / PTK[4]	BS [ICE]	Bus Cycle Start Signal		O
96	RD	RD			O
97	WE0 / DQMLL	WE0	D7 - D0 Select Signal / DQM (SDRAM)		O
98	WE1 / DQMLU / WE	WE1	D15 - D8 Select Signal / DQM (SDRAM)		O
99	WE2 / DQMUL / ICIORD / PTK[6]	WE2	D23 - D16 Select Signal / DQM (SDRAM)		O
100	VssQ	GND			
101	WE3 / DQMUU / ICIOWR / PTK[7]	WE3	D31 - D24 Select Signal / DQM (SDRAM)		O
102	VccQ	3.3V			
103	RD / WR	RDWR	Read / Write		O
104	PTE[7] / PCC0RDY / AUDSYNC	AUDSYNC	ADU SYNC		O
105	CS0	CS0	Chip Select 0 Flash Memory [16bit]		O
106	CS2	CS2	Chip Select 2 Divice1 [16bit]		O
107	CS3	CS3	Chip Select 3 SDRAM [32bit]		O
108	CS4 / PTK[2]	CS2	Chip Select 4 Divice2 [16bit]		O
109	CS5 / CE1A / PTK[3]	not used	Chip Select 5 Divice3 [8bit]		O
110	CS6 / CE1B	not used	Chip Select 6 Divice4 [8bit]		O
111	CE2A / PTE[4]	ON_15V	LCD Panel Drive Power Control		O
112	CE2B / PTE[5]	not used	Setting DPRAM		O
113	AFE_HC1 / USB1d_DPLS / PTK[0]	MOTHR_FPGA_CCLK	Clock Pin for Configuration		O
114	AFE_RLYCNT / USB1d_DMNS / PTK[1]	MOTHR_FPGA_PROG	Configuration Start Pin		O
115	VssQ	GND			
116	AFE_SCLK / USB1d_TXDPLS	not used	AFE CLOCK		O
117	VccQ	3.3V			
118	PTM[7]/PINT[7]/AFE_FS/USB1d_RCV	not used	not used		I
119	PTM[6]/PINT[6]/AFE_RXIN/USB1d_SPEED	not used	not used		I
120	PTM[5]/PINT[5]/AFE_TXOUT/USB1d_TXSE0	not used	not used		I
121	PTM[4]/PINT[4]/AFE_RDET/ USB1d_TXDMNS	PW_BSY	DPRAM Access Control (Input)	"L" : BYSY	I
122	RESARVATION / USB1d_SUSPEND	not used	Resarvation / Transceiver Suspend Output		O
123	USB1_ovr_crnt / USBF_VBUS	USBF_VBUS [Func]	USB Function Bus		I
124	USB2_ovr_crnt	not used	USB Host2 Over_Current Detect		I
125	RTS2 / USB1d_TXENL	not used	SCIF RTS Terminal / USB Output Enable Terminal		O
126	PTE[2] / USB1_pwr_en	USB_pwr_en [Func]	USB1 Voltage Control		O
127	PTE[1] / USB2_pwr_en	not used	USB2 Voltage Control		O
128	CKE / PTK[5]	CKE	CK Enable (SDRAM)		O
129	RAS3 / PTJ[0]	RAS3	RAS for SDRAM		O
130	PTJ[1]	SH_EEP_WP	EEPROM Write Protect		O
131	RESARVATION / CAS / PTJ[0]	CAS	CAS for SDRAM		O
132	VssQ	GND			
133	PTJ[3]	MOTHER_FPGA_DATA	Configuration Data Pin		O
134	VccQ	3.3V			
135	PTJ[4]	NIOS_FPGA_CCLK	Configuration Clock Pin		O
136	PTJ[5]	NIOS_FPGA_PROG	Configuration Start Pin		O
137	Vss	GND			

Control Port Functions

PIN NO.	NAME	FUNCTION NAME	FUNCTION	POLARITY	I/O
138	PTD[5] / CL1	PW_RESET	PW Reset Signal		O
139	Vcc	1.9V			
140	PTD[7] / DON	SH_PW_0	SH Reset Software Protect	"L" : Enable "H" :disable	O
141	PTE[6] / M_DISP	NIOS_FPGA_DATA	Configuration data Pin		O
142	PTE[3] / FLM	SF_BSY	DPRAM Access Control (Output)	"L" : BYSY	O
143	PTE[0] / TDO	TDO [ICE]	Test Data Output		O
144	PCC0RESET / DRAK0	not used	PCC Reset / DMA Demand receipt		O
145	PCC0DRV / DACK0	not used	PCC Buffer Control / DMA Acknowlege 0		O
146	WAIT	not used	Hardware Wait		I
147	RESETM	RESETM	Manual Reset Demand		I
148	ADTRG / PTH[5]	not used	Analog Trigger / Input Port H		I
149	IOIS16 / PTG[7]	not used	IOIS16(PCMCIA) / Input Port G		I
150	ASEMD0	ASSEMD0[ICE]	ASE Mode		I
151	PTG[5] / ASERKAK	ASEBRKAK [ICE]	ASE Break Acknowlege		O
152	PTG[4}	not used	Input Port G		I
153	PCC0BVD2 / PTG[3] / AUDATA[3]	AUDATA[3]	AUDATA[3]		O
154	PCC0BVD1 / PTG[2] / AUDATA[2]	AUDATA[2]	AUDATA[2]		O
155	Vss	GND			
156	PCC0BCD2 / PTG[1] / AUDATA[1]	AUDATA[1]	AUDATA[1]		O
157	Vcc	1.9V			
158	PCC0BCD1 / PTG[0] / AUDATA[0]	AUDATA[1]	AUDATA[0]		O
159	VssQ	GND			
160	PTF[7] / PINT[15] / TRST	TRST	Test Reset		I
161	VccQ	3.3V			
162	PTF[6] / PINT[14] / TRST	TMS	Test Mode Switch		I
163	PTF[5] / PINT[13] / TDI	TDI	Test Data Input		I
164	PTF[4] / PINT[12] / TCK	TCK	Test Clock		I
165	PTF[3] / PINT[11]	not used	Input Port F / Port Interrupt / Resarvation		I / I / O
166	PCCREG / PTF[2] / RESARVATION	not used	PCC REG / Input Port F / Resarvation		O / I / O
167	PCCVS1 / PTF[1] / RESARVATION	not used	PCC VS1 / Input Port F / Resarvation		I / I / O
168	PCCVS2 / PTF[0] / RESARVATION	MOTHER_FPGA_NSTATUS	Error Detect		I
169	MD0	MD0	Setting Clock Mode	Always : L	O / I / O
170	Vcc_PLL1	1.9V	Power PLL1		
171	CAP1	CAP1	PLL1 External Capacity Terminal		
172	Vss_PLL1	GND			
173	Vss_PLL2	GND			
174	CAP2	CAP2	PLL2 External Capacity Terminal		
175	Vcc_PLL2	1.9V	Power PLL1		
176	PCC0WAIT / PTH[6] / AUDCK	AUDCK	AUD Clock		I
177	Vss	GND			
178	Vcc	1.9V			
179	XTAL	not used	Clock Oscilator		O
180	EXTAL	EXTAL	External Clock / Crystal Oscilator [33.33333MHz]		I
181	LCD15 / PTM[3] / PINT[10]	MOTHER_FPGA_DONE	AUD Clock / Configuration Process End Signal		I
182	LCD14 / PTM[2] / PINT[9]	SH_CHK_DPRAM	PW_INT Clear Monitor (Input)	"L" : Non Clear	I
183	LCD13 / PTM[1] / PINT[8]	NIOS_FPGA_NSTATUS	Error Detect		I
184	LCD12 / PTM[0]	NIOS_FPGA_DONE	Normary Ends Detect		I
185	STATUS0 / PTJ[6]	READY_LED	Ready LED Output	"H" : ON	O
186	STATUS1 / PTJ[7]	IC_RESET_CPU	IC Power Conyrol		O
187	CL2	SH_FLASH_WP	Flash Write Protect		O
188	VssQ	GND			
189	CKIO	CKIO	System Clock Input / Output		I / O
190	VccQ	3.3V			
191	TxD0 / SCPT[0]	SH_LB_UART	Send Data (Network)	19200bps / 9600bps	O
192	SCK0 / SCPT[1]	not used	Serial Clock 0 / SCI IO Port		IO / IO
193	TxD_SIO / SCPT[2]	not used	SIOF Send Data / SCI Output Port		O / O
194	SIOMCLK / SCPT[3]	not used	SIOF Clock Input / SCI IO Port		I / IO
195	TxD2 / SCPT[4]	SH_EX_UART	Send Data (External)	19200bps / 9600bps	O
196	SCK_SIO / SCPT[5]	not used	SIOFClock / SCI IO Port		IO / IO
197	SIOFSYNC / SCPT[6]	not used	SIOF Flame Sync / SCI Output Port		IO / IO
198	RxD0 / SCPT[0]	LB_SH_UART	Receive Data (Network)	19200bps / 9600bps	I
199	RxD_SIO / SCPT[2]	not used	SIOF Receive Data / SCI INput Port		I / I
200	Vss	GND			
201	RxD2 / SCPT[4]	EX_SH_UART	Receive Data (external) 19200bps / 9600bps		I
202	Vcc	1.9V			
203	SCPT[7] / CTS2 / IRQ5	SH_IRQ_SHUT	Shutter Interrupt		I / I / I
204	LCD11 / PTC[7] / PINT[3]	SH_SDA_Slot4	IIC Bus (Slot4)	"L" : Active	IO

Control Port Functions

PIN NO.	NAME	FUNCTION NAME	FUNCTION	POLARITY	I/O
205	LCD10 / PTC[6] / PINT[2]	SH_SCL_Slot4	IIC Bus (Slot4)	"L" : Active	IO
206	LCD9 / PTC[5] / PINT[1]	SH_SDA_Slot3	IIC Bus (Slot3)	"L" : Active	IO
207	VssQ	GND			
208	LCD8 / PTC[4] / PINT[0]	SH_SCL_Slot3	IIC Bus (Slot3)	"L" : Active	IO
209	VccQ	3.3V			
210	LCD7 / PTD[3]	SH_SDA_3V	IIC Bus	"L" : Active	IO
211	LCD6 / PTD[2]	SH_SCL_3V	IIC Bus	"L" : Active	IO
212	LCD5 / PTC[3]	SH_SDA_Slot2	IIC Bus (Slot2)	"L" : Active	IO
213	LCD4 / PTC[2]	SH_SCL_Slot2	IIC Bus (Slot2)	"L" : Active	IO
214	LCD3 / PTC[1]	SH_SDA_Slot1	IIC Bus (Slot1)	"L" : Active	IO
215	LCD2 / PTC[0]	SH_SCL_Slot2	IIC Bus (Slot2)	"L" : Active	IO
216	LCD1 / PTD[1]	SH_SDA_S3V	IIC Bus (Slot2)	"L" : Active	IO
217	LCD0 / PTD[0]	SH_SCL_Slot2	IIC Bus (Slot2)	"L" : Active	IO
218	DREQ0 / PTD[4]	PW_SH_0	PW --> SH Input signal		I
219	LCK / UCLK PTD[6]	UCLK	USB Clock (48MHz)		I
221	CA	not used	Hardware Stand-BY Demand		I
222	MD3	MD3	Bus Widht setting for Area 0	"L" : Always	I
223	MD4	MD4	Bus Widht setting for Area 0	"H" : Always	I
224	Scan_testen	3.3V	Test Terminal		I
225	AVcc_USB	3.3V	USB Analog Power		
226	USB1_P (analog)	USB1P [Func]	USB1 Data Output (+)		IO
227	USB1_M (analog)	USB1M [Func]	USB1 Data Output (-)		IO
228	AVss_USB	GND			
229	USB2_P (analog)	not used	USB2 Data Output (+)		IO
230	USB2_M (analog)	not used	USB2 Data Output (-)		IO
231	AVcc_USB	3.3V	USB Analog Power		
232	AVss	GND			
233	AN[2] / PTL[2]	DUAL_SENS	Pressure Sensor / WInd Sensor		AI
234	AN[3] / PTL[3]	TEMP_SENS	Temperature Sensor Input		AI
235	AN[4] / PTL[4]	KEY1	KEY AD Converter Input		AI
236	AN[5] / PTL[5]	KEY2	KEY AD Converter Input		AI
237	AVcc	3.3V			
238	AN[6] / PTL[6] / DA[1]	KEY3	KEY AD Converter Input		AI
239	AN[7] / PTL[7] / DA[0]	OPT1	Option Resister		AI
240	AVss	GND			

● IIC Bus DA Converter (IC7801 M62393FP)

PIN NO.	NAME	FUNCTION NAME	FUNCTION	POLARITY	I/O
12	A1	DACFANCONT1	0 ~ 255 = 13.8~ 6.0 V		O
13	A2	DACFANCONT2	0 ~ 255 = 13.8~ 6.0 V		O
14	A3	DACFANCONT3	0 ~ 255 = 13.8~ 6.0 V		O
15	A4				O
4	A5	DACFANSW1	ON : 255 / OFF 0		O
5	A6	DACFANSW2	ON : 255 / OFF 0		O
6	A7	DACFANSW3	ON : 255 / OFF 0		O
7	A8	ON_25V	ON : 255 / OFF 0		O

● Parallel Bus I/O Expander (IC5861 FPGA_NIOS EP2C5F256C)

PIN NO.	NAME	FUNCTION NAME	FUNCTION	POLARITY	I/O
R6	LENSE_OUT [7]	ZOOM +	Zoom UP	"L" : Stop / "H" : Move	O
P6	LENSE_OUT [6]	ZOOM -	Zoom Down	"L" : Stop / "H" : Move	O
M6	LENSE_OUT [5]	FOCUS +	Focus UP	"L" : Stop / "H" : Move	O
N6	LENSE_OUT [4]	FOCUS -	Focus Down	"L" : Stop / "H" : Move	O
L7	LENSE_OUT [3]	LENS UP	Lens Shift Up	"L" : Stop / "H" : Move	O
M7	LENSE_OUT [2]	LENS DOWN	Lens Shift Down	"L" : Stop / "H" : Move	O
R7	LENSE_OUT [1]	LENS L	Lens Shift Left	"L" : Stop / "H" : Move	O
T7	LENSE_OUT [0]	LENS R	Lens Shift Right	"L" : Stop / "H" : Move	O
N5	LENSE_DET [5]	LENS TOP	Lens Shift Upper Limit Detect	"L" : Lens Bottom Arrival	I
T6	LENSE_DET [4]	LENS BTM	Lens Shift Lower Limit Detect	"L" : Lens Top Arrival	I
T5	LENSE_DET [3]	LENS LE	Lens Shift Left Limit Detect	"L" : Lens Right Arrival	I
R4	LENSE_DET [2]	LENS RE	Lens Shift Right Limit Detect	"L" : Lens Left Arrival	I
R5	LENSE_DET [1]	LENS VC	Lens Shift U/D Center Limit Detect		I
T4	LENSE_DET [0]	LENS HC	Lens Shift R/L Center Limit Detect		I
R3	LAMP_RX [3]	LAMP4_RX	Lamp4 Data Receive	"H" : ON / "L" : OFF	I
N3	LAMP_RX [2]	LAMP3_RX	Lamp3 Data Receive	"H" : ON / "L" : OFF	I
T3	LAMP_TX [3]	LAMP4_TX_EX	Lamp4 Data Send		O
P3	LAMP_TX [2]	LAMP3_TX_EX	Lamp3 Data Send		O
L2	4LCD_SW	4LCD_SW_NIOS	YE Drive		O

● I/O Expander (IC8181 M62320FP)

PIN NO.	NAME	FUNCTION NAME	FUNCTION	POLARITY	I/O
1	SO	SO	Serial Data Output (not used)		O
2	SCL	SCL	IIC Bus (Clock)		I
3	SDA	SDA	IIC Bus (Data)		I/O
4	D0	SCDT_DIF	SCDT_DIF		O
5	D1	SIPD_DIF	SIPD_DIF		O
6	D2	P_FAIL	Power Fail Detection	"L": Abnormality	I
7	D3	DDC_WRITE	DDC Write Signal		O
9	D4	DSUB_DDC_SW	DDC for D-Sub SW		O
10	D5	CTL3	CTL3		
11	D6	SIRST_DIF	SIRST_DIF		O
12	D7	HDCP_SW	HDCP SW		O

● I/O Expander (IC8182 M62320FP)

PIN NO.	NAME	FUNCTION NAME	FUNCTION	POLARITY	I/O
1	SO	SO	Serial Data Output (not used)		O
2	SCL	SCL	IIC Bus (Clock)		I
3	SDA	SDA	IIC Bus (Data)		I/O
4	D0	VS_DET	V-Sync Signal Detection Input		I
5	D1	SYNC_ID	Sync ID Input		I
6	D2	A_D	Analog / Digital Switch		O
7	D3	not used			
9	D4	SIPDO_DIF	SIPDO_DIF		O
10	D5	F_C	Frequency Charactoristic SW	"H": On	O
11	D6	HD_NTSC_SW	HD NTSC SW		O
12	D7	SCART_SW	SCART-SW	"H": SCART	O

● I/O Expander (IC8183 M62320FP)

PIN NO.	NAME	FUNCTION NAME	FUNCTION	POLARITY	I/O
1	SO	SO	Serial Data Output (not used)		O
2	SCL	SCL	IIC Bus (Clock)		I
3	SDA	SDA	IIC Bus (Data)		I/O
4	D0	DVI_2.5VSW	VDD2.5V_DVI Power Supply SW	"H": On	O
5	D1	3.3V SW	3.3V DC Drive SW	"H": On	O
6	D2	DVI_HPD	DVI_HPD		O
7	D3	not used			
9	D4	not used			
10	D5	not used			
11	D6	PF_2.5VDVI	Power Fail Detection Input	"L": Abnormality	I
12	D7	not used			

● I/O Expander (IC9911 M62320FP)

PIN NO.	NAME	FUNCTION NAME	FUNCTION	POLARITY	I/O
1	SO	SO	Serial Data Output (not used)		O
2	SCL	SCL	IIC Bus (Clock)		I
3	SDA	SDA	IIC Bus (Data)		I/O
4	D0	not used			
5	D1	CG_SW	Computer Mode SW 30KHz / 15KHz		O
6	D2	not used			
7	D3	SYNC_SW	Sync SW 30KHz / 15KHz		O
9	D4	D3	BNC H/V Sync Impedance Change	"H": On	O
10	D5	VD_RST	VD_RST		O
11	D6	15K_30K_SW	15K/30K System SW	"H": 15KHz, "L": 30KHz	O
12	D7	S_SW	S-Video Terminal Detection SW	"L": Connected	I

● I/O Expander (IC9912 M62320FP)

PIN NO.	NAME	FUNCTION NAME	FUNCTION	POLARITY	I/O
1	SO	SO	Serial Data Output (not used)		O
2	SCL	SCL	IIC Bus (Clock)		I
3	SDA	SDA	IIC Bus (Data)		I/O
4	D0	PF_3.3V_D	Power Fail Detection	"L": Abnormality	I
5	D1	PF_1.8V_D	Power Fail Detection	"L": Abnormality	I
6	D2	PF_3.3V_A	Power Fail Detection	"L": Abnormality	I
7	D3	PF_1.8V_A	Power Fail Detection	"L": Abnormality	I
9	D4	not used			
10	D5	PF_3.3VFPGA	Power Fail Detection	"L": Abnormality	I
11	D6	PF_9V	Power Fail Detection	"L": Abnormality	I
12	D7	PF	Power Fail Detection (PF_F5V / PF_5V)	"L": Abnormality	I

● Parallel Bus I/O Expander (IC5801 FPGA_IO EP2C5F256C)

PIN NO.	NAME	FUNCTION NAME	FUNCTION	POLARITY	I/O
R4	PWR_FAIL [35]	PF_2.5V_PIC	S2.5V_PICA Power Abnormality Detect	Normal ="H" / Abnormality="L"	I
J12	PWR_FAIL [34]	PF_FAN2	Lamp2 Fan Lock Detect	Normal ="H" / Abnormality="L"	I
P14	PWR_FAIL [33]	PF_FAN1	Lamp1 Fan Lock Detect	Normal ="H" / Abnormality="L"	I
T4	PWR_FAIL [32]	PF_1.2VPIC	1.2V Power Abnormality Detect	Normal ="H" / Abnormality="L"	I
J11	PWR_FAIL [31]	AC_SENS	AC Sensor Abnormality Detect	Normal ="H" / Abnormality="L"	I
K10	PWR_FAIL [30]	PF_VCCFAN2	Lamp 2 Fan Power Abnormality Detect	Normal ="H" / Abnormality="L"	I
K11	PWR_FAIL [29]	PF_PFC2	PFC2 Error Detect	Normal ="H" / Abnormality="L"	I
L11	PWR_FAIL [28]	PF_PFC2FAN1	PFC1&2 Power Abnormality Detect	Normal ="H" / Abnormality="L"	I
L12	PWR_FAIL [27]	PF_FAN3	Lamp3 Fan Lock Detect	Normal ="H" / Abnormality="L"	I
M12	PWR_FAIL [26]	PF_25V_4LCD	25V Power Abnormality Detect	Normal ="H" / Abnormality="L"	I
M11	PWR_FAIL [25]	PF_PFC3	PFC3 Error Detect	Normal ="H" / Abnormality="L"	I
L10	PWR_FAIL [24]	PF_VCCFAN3	Lamp 3 Fan Power Abnormality Detect	Normal ="H" / Abnormality="L"	I
L9	PWR_FAIL [23]	PF_S9V	S9V Power Abnormality Detect	Normal ="H" / Abnormality="L"	I
L8	PWR_FAIL [22]	PF_1.2VFST	SWFPGA 1.2V Power Abnormality Detect	Normal ="H" / Abnormality="L"	I
L7	PWR_FAIL [21]	PF_1.8VGAM	CXD3540GB 1.8V Power Abnormality Detect	Normal ="H" / Abnormality="L"	I
N8	PWR_FAIL [20]	PF_PLLFST	PLL 1.2V Power Abnormality Detect	Normal ="H" / Abnormality="L"	I
N9	PWR_FAIL [19]	PF_5V	5V Power Abnormality Detect	Normal ="H" / Abnormality="L"	I
N10	PWR_FAIL [18]	PF_VCCFAN4	Lamp 4 Fan Power Abnormality Detect	Normal ="H" / Abnormality="L"	I
N11	PWR_FAIL [17]	PF_PFC4	PFC4 Error Detect	Normal ="H" / Abnormality="L"	I
N12	PWR_FAIL [16]	PF_K8G	K8G Connecter Detect	Normal ="H" / Abnormality="L"	I
P11	PWR_FAIL [15]	PF_PFC1	PFC1 Error Detect	Normal ="H" / Abnormality="L"	I
P11	PWR_FAIL [14]	PF_PFCFAN2	PFC3&4 Fan Power Abnormality Detect	Normal ="H" / Abnormality="L"	I
P5	PWR_FAIL [13]	PF_3.3VAD	ADC 3.3V Power Abnormality Detect	Normal ="H" / Abnormality="L"	I
R5	PWR_FAIL [12]	PF_1.8VAD	ADC 3.3V Power Abnormality Detect	Normal ="H" / Abnormality="L"	I
R7	PWR_FAIL [11]	PF_S16V	16V Power Abnormality Detect	Normal ="H" / Abnormality="L"	I
R8	PWR_FAIL [10]	PF_15.5VGAM	CXD3540GB 15.5V Power Abnormality Detect	Normal ="H" / Abnormality="L"	I
R9	PWR_FAIL [9]	PF_16V_M	16V Power Abnormality Detect	Normal ="H" / Abnormality="L"	I
R10	PWR_FAIL [8]	PF_12VA	12V Power Abnormality Detect	Normal ="H" / Abnormality="L"	I
R11	PWR_FAIL [7]	PF_TH	K8U Connecter Detect	Normal ="H" / Abnormality="L"	I
T11	PWR_FAIL [6]	PF_VCCFAN1	Lamp1 Fan Power Abnormality Detect	Normal ="H" / Abnormality="L"	I
T10	PWR_FAIL [5]	PF_3.3V	3.3V Power Abnormality Detect	Normal ="H" / Abnormality="L"	I
T9	PWR_FAIL [4]	PF_-5V	-5V Power Abnormality Detect	Normal ="H" / Abnormality="L"	I
T8	PWR_FAIL [3]	PF_2.5VGAM	CXD3540GB 2.5V Power Abnormality Detect	Normal ="H" / Abnormality="L"	I
T7	PWR_FAIL [2]	PF_3.3VGAM	CXD3540GB 3.3V Power Abnormality Detect	Normal ="H" / Abnormality="L"	I
T6	PWR_FAIL [1]	PF_3.3V_PIC	S3.3V_PIC Power Abnormality Detect	Normal ="H" / Abnormality="L"	I
T5	PWR_FAIL [0]	PF_MOTOR	MOTOR Abnormality Detect	Normal ="H" / Abnormality="L"	I
G10		SHUTTER_SW1	Shutter Control SW1		O
G11		SHUTTER_SW2	Shutter Control SW2		O
H1		POSITION_DET1	Shutter Position Detection 1		I
J1		POSITION DET2	Shutter Position Detection 2		I
H11	GPO [14]	SW_3.3VGAM	CXD3540GB 3.3V SW		O
H13	GPO [13]	SW_2.5VGAM	CXD3540GB 2.5V SW		O
C2	GPO [12]	SW_1.8VGAM	CXD3540GB 1.8V SW		O
B11	GPO [11]	POWER_LED	Power LED ON / OFF	"H" : ON / "L" : DIM	O
B12	GPO [10]	SW_3.3VPIC	3.3V Power SW	"H" : ON / "L" : OFF	O
A12	GPO [9]	TEMP_LED	Temp LED ON / OFF	"H" : ON / "L" : OFF	O
A11	GPO [8]	LAMP1_REP_LED _EX	Lamp1 Replace LED ON / OFF	"H" : ON / "L" : OFF	O
A10	GPO [7]			Always : L	O
A9	GPO [6]	RST_GAM	CXDD3540GB Reset (XCLR)	Reset = "L" --> "H"	O
A8	GPO [5]	PLL_STB	CXDD3540GB Reset (XPLLSTB)	Stand-by = "L" --> "H"	O
A7	GPO [4]	PJ_MTR	PJ-NET Connection (Option Slot)	Standerd = "H"	O
A6	GPO [3]	FP_EXP_CON	Analog Signal Condensor ON	ON = "H" / OFF = "L"	O
A5	GPO [2]	FP_EXP_SWDVI	Digital Signal Enable	Digital= "L" / Analog = "H"	O
A4	GPO [1]			Always : "L"	O
A3	GPO [0]	W_RC_SW	Wired RC SW	"L" : WIred	I
B6	BLAST_SW[3]	BLAST_SW_4_EX	LAMP4 Ballast SW	"L" : ON / "H" : OFF	O
B7	BLAST_SW[2]	BLAST_SW_3_EX	LAMP3 Ballast SW	"L" : ON / "H" : OFF	O
B9		AD_SW1	Wind Sensor SW		O
P12		AD_SW2	Press Sensor SW		O
B10	GPO	LAMP2_REP_LED	Lamp2 Replace LED ON / OFF	"L" : ON / "H" : OFF	O
D8	LAMP_ON [3]	LAMP4_EX	Lamp 4 ON / OFF Output	"H" : ON / "L" : OFF	O
C6	LAMP_ON [2]	LAMP3_EX	Lamp 3 ON / OFF Output	"H" : ON / "L" : OFF	O
C11		SHUTTER_LED	Shutter LED ON / OFF	"H" : ON / "L" : OFF	O
C12		WARNING FILTER LED	Warning Filter LED ON / OFF	"H" : ON / "L" : OFF	O
C3		SW_PF3.3V	Power Fail 3.3V Line SW	"L": Normal	O

Waveform

VIDEO-IN < TP201(R)>	VIDEO-IN < TP211(G)>	VIDEO-IN < TP221(B)>
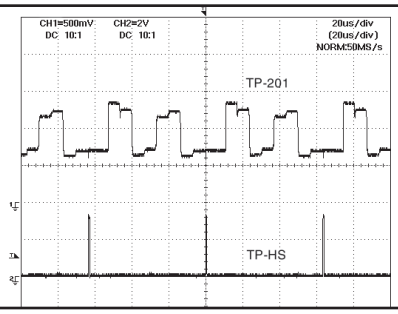	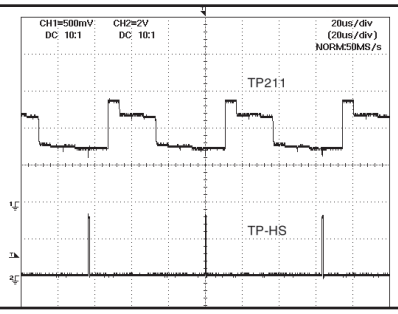	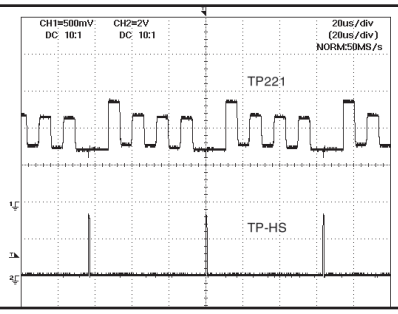
PC-IN < TP201(R)>	PC-IN < TP211(G)>	PC-IN < TP221(B)>
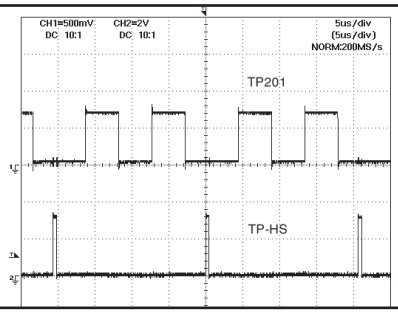	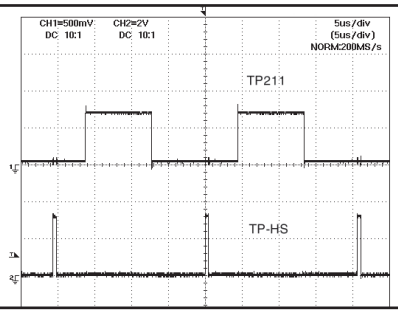	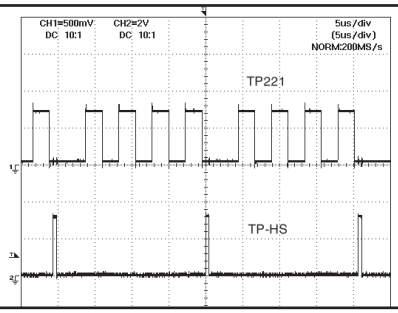
VIDEO-IN <TP201> V-SYNC	PC_16STEP-IN<TP211>	PC_16STEP-OUT<TP531>
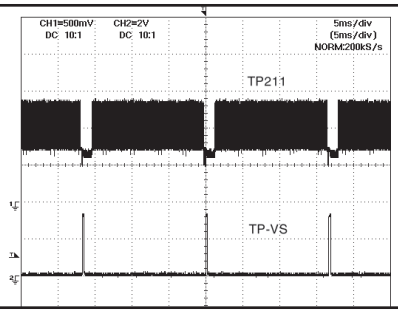	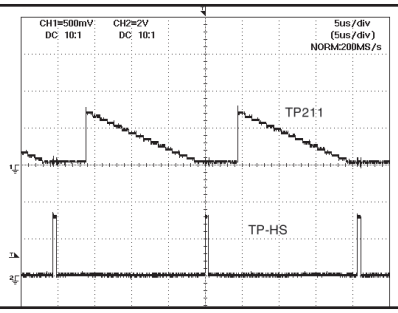	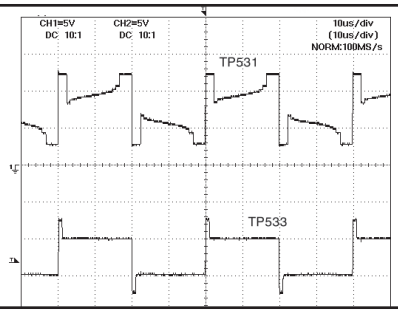
PC_R-OUT<TP561>	PC_G-OUT<TP531>	PC_B-OUT<TP501>
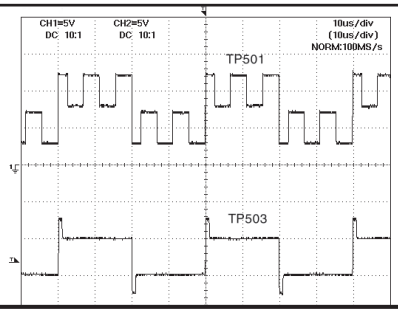	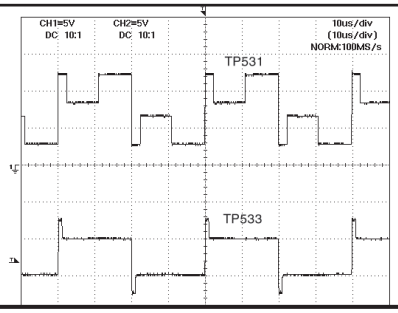	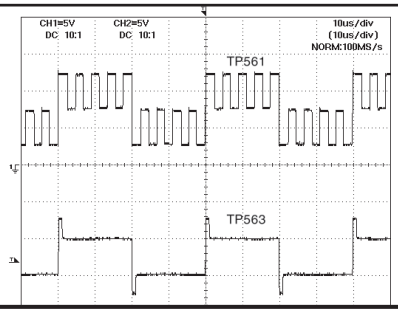

IC Block Diagrams

● PW388B <System control, Scan Converter, IC301>

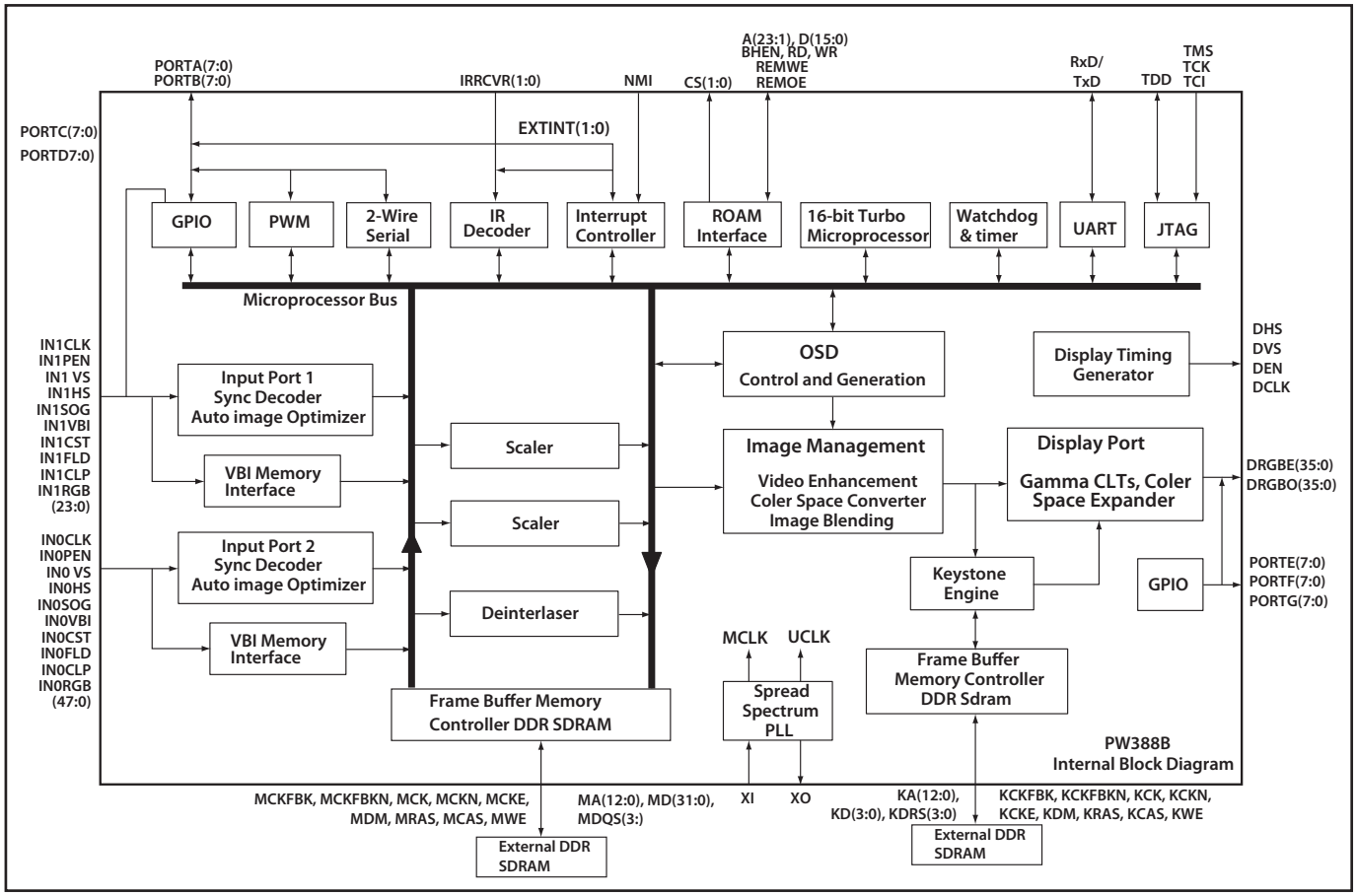

● CXD3548ABG <Gamma Correction, IC401>

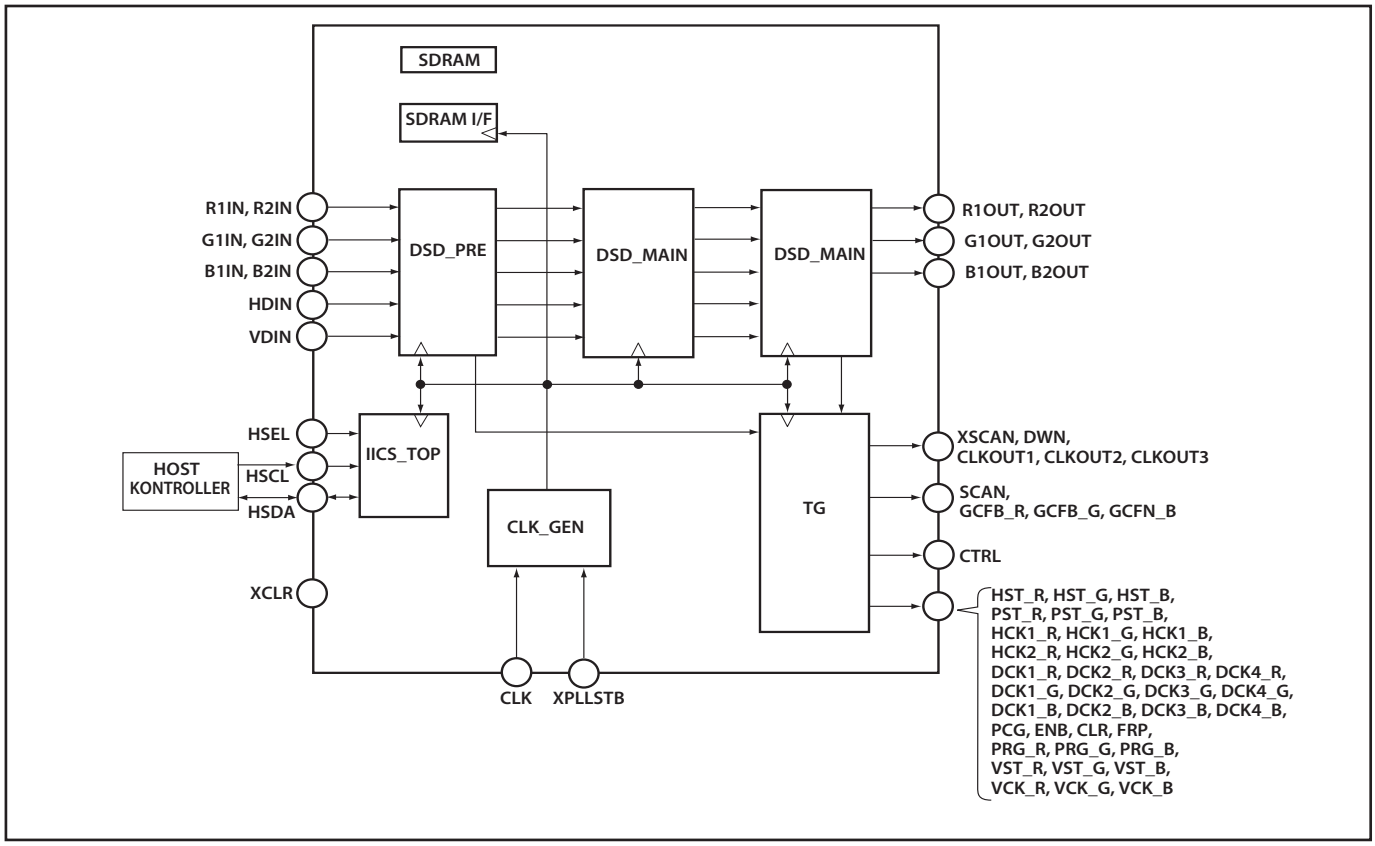

● HD6417727F <CPU[SH3], IC801>

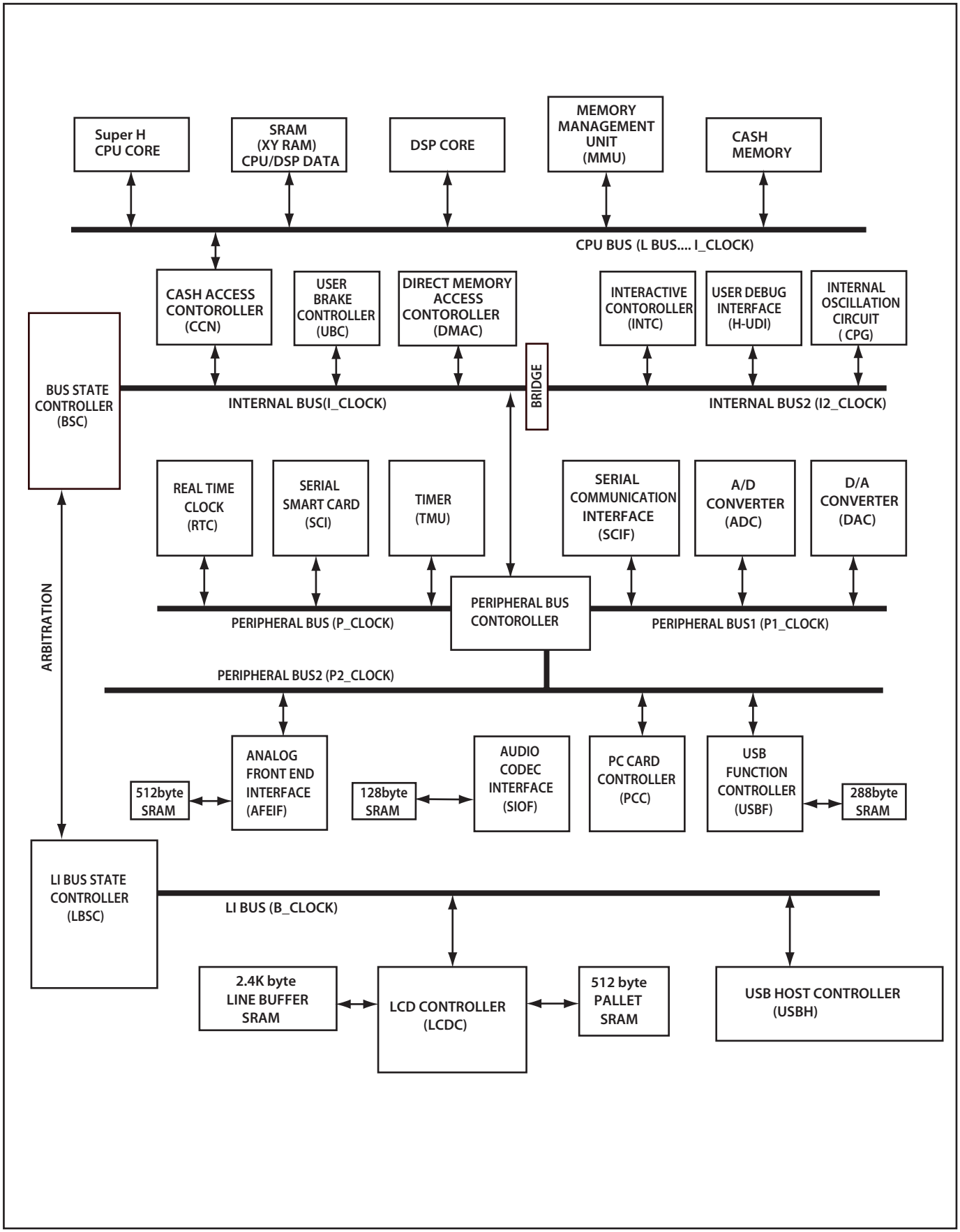

● CXA7009AR <S/H, IC1501, IC1531, IC1561, IC501, IC531, IC561>

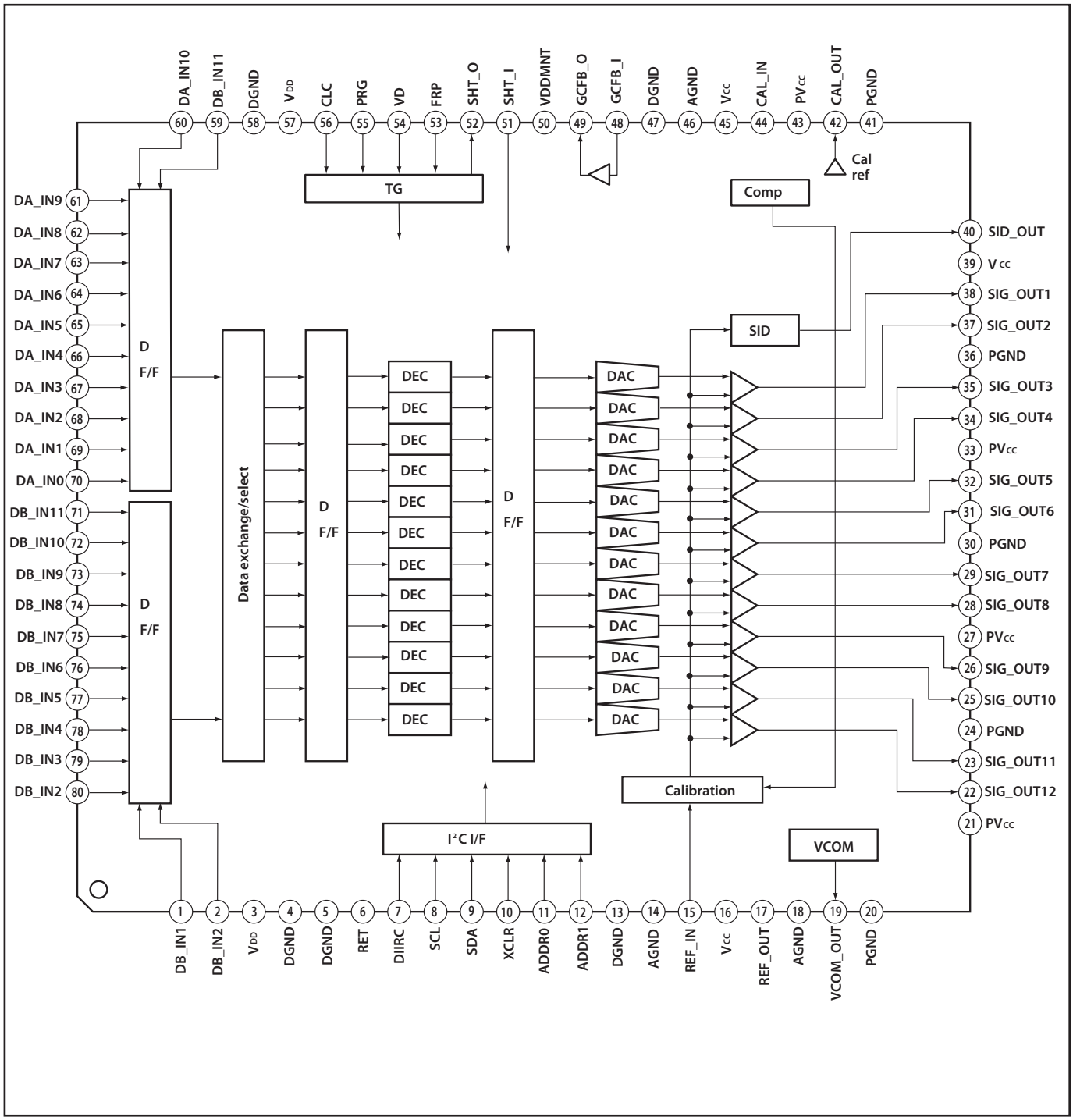

● AD8183 <RGB-SW & Amp. , IC1061>

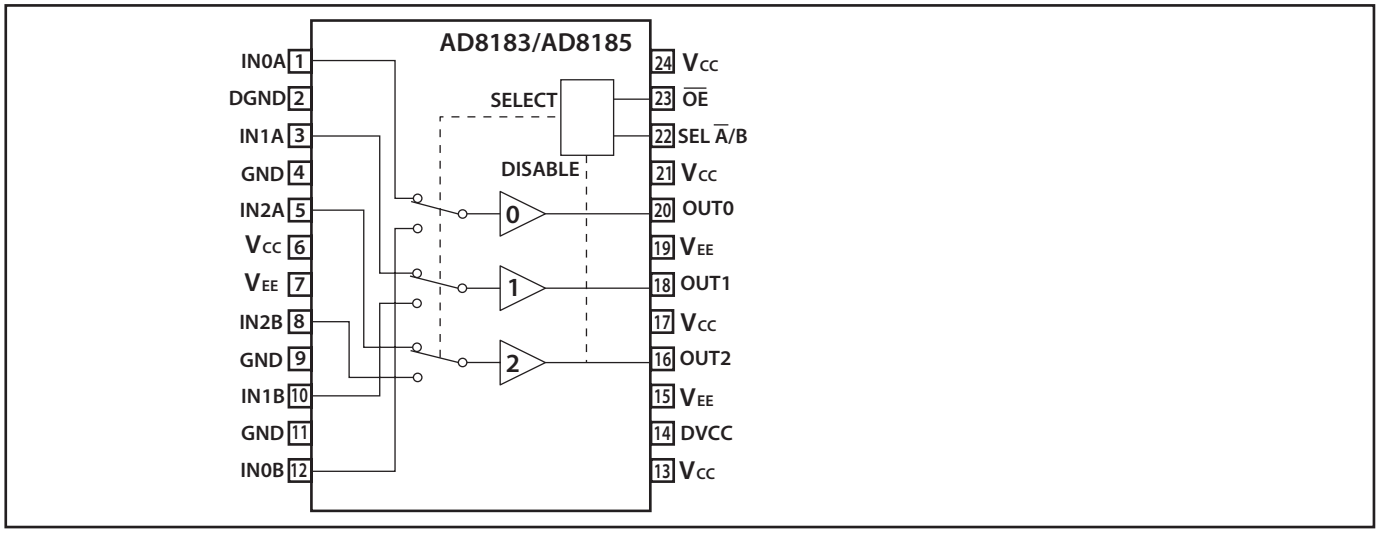

● CXD3815Q <Digital Chroma Decoder, IC1101>

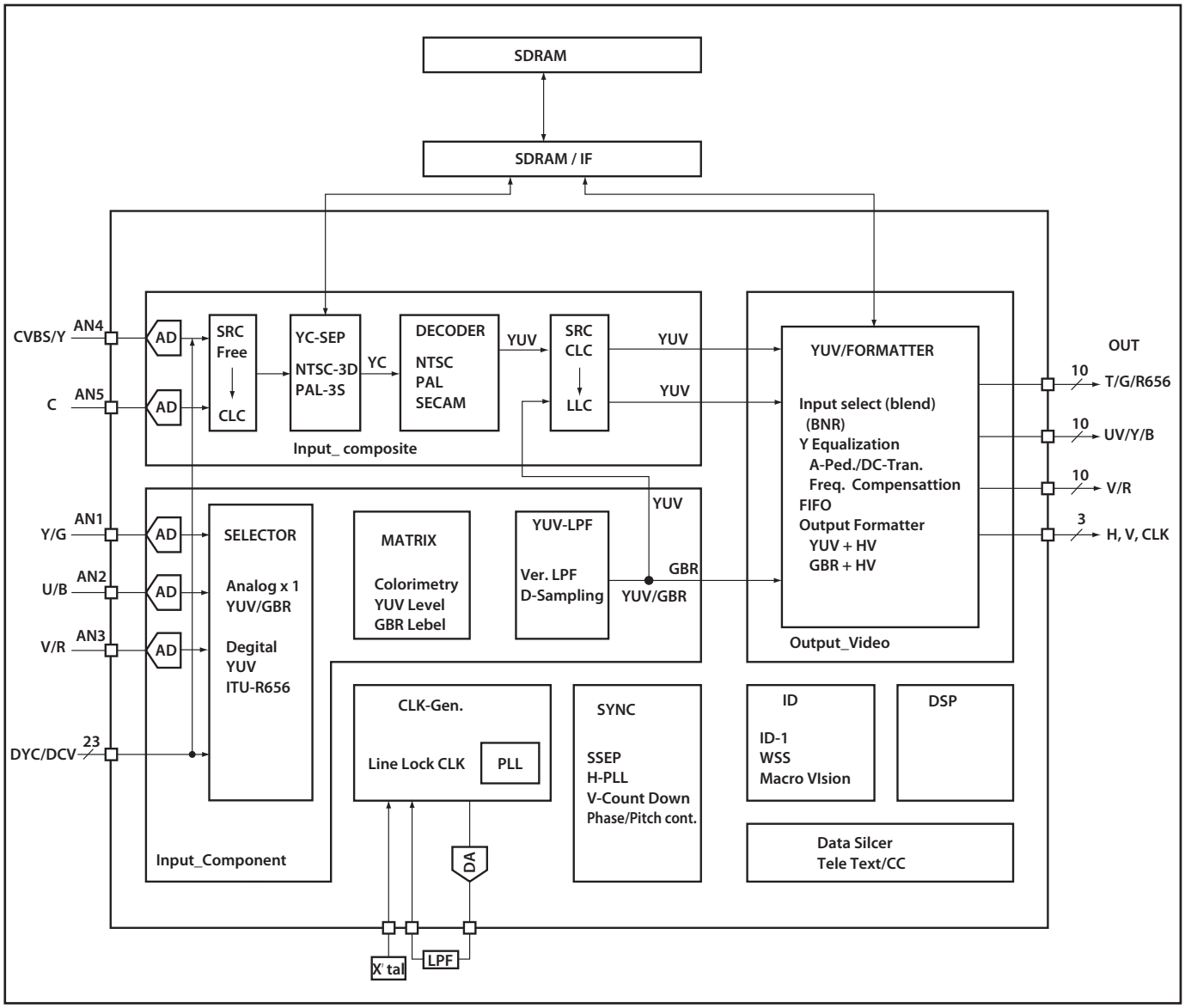

● M62320 <I/O Expander, IC8181, IC8182, IC8183, IC9911, IC9912>

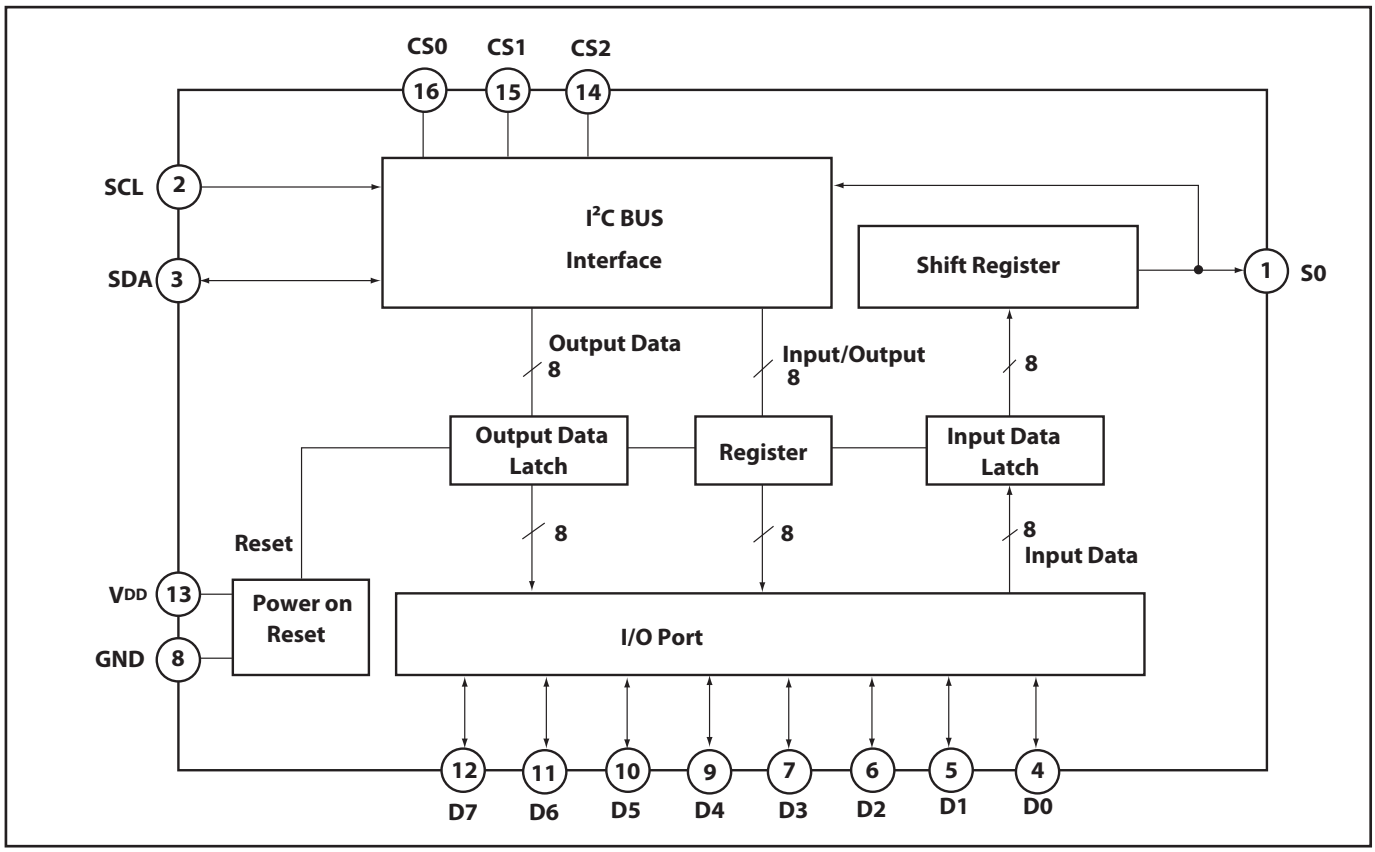

● BA7078AF <Sync Separator, IC2011, IC8021>

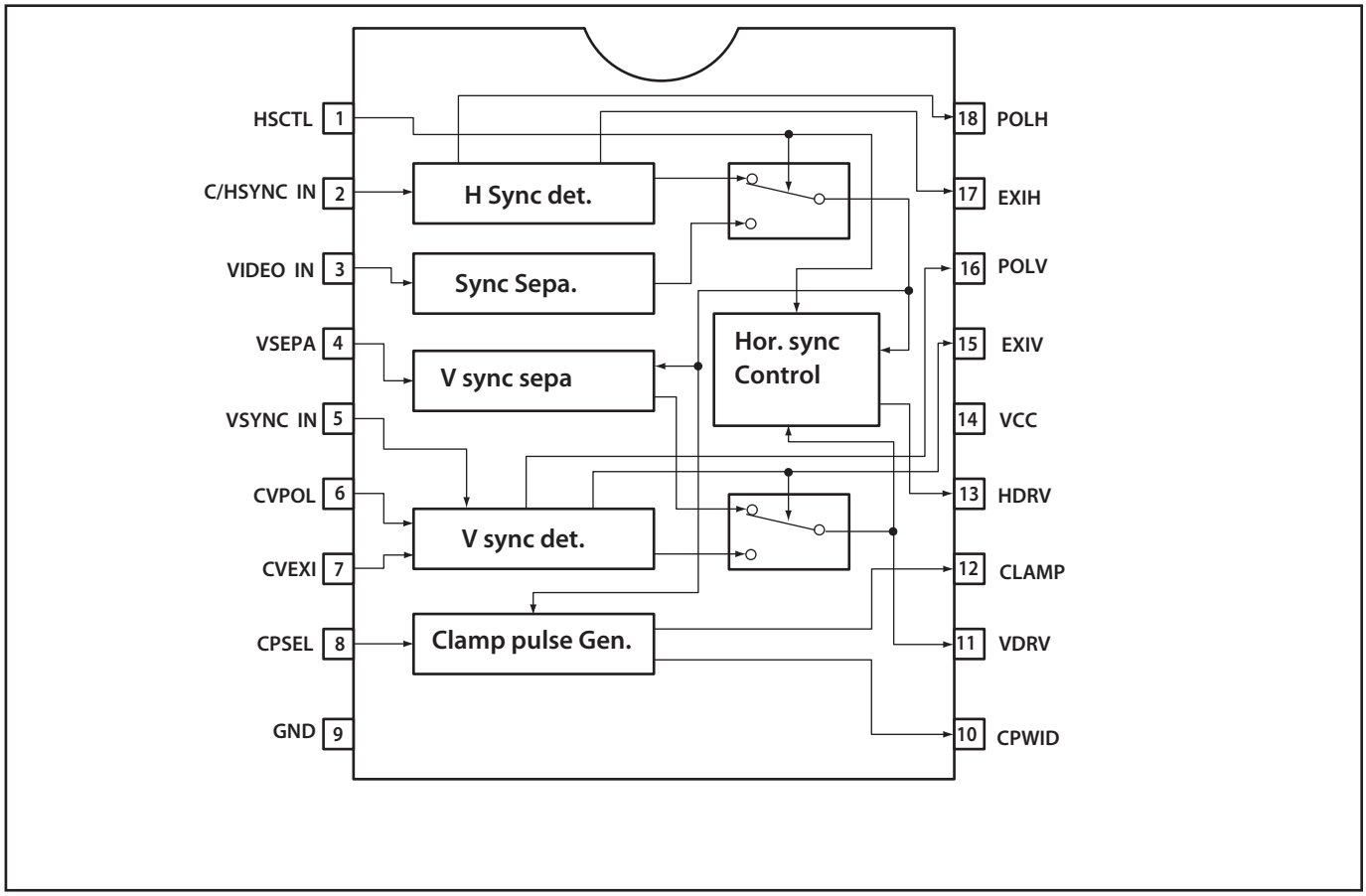

Parts Location Diagrams

Cabinet front and top assembly

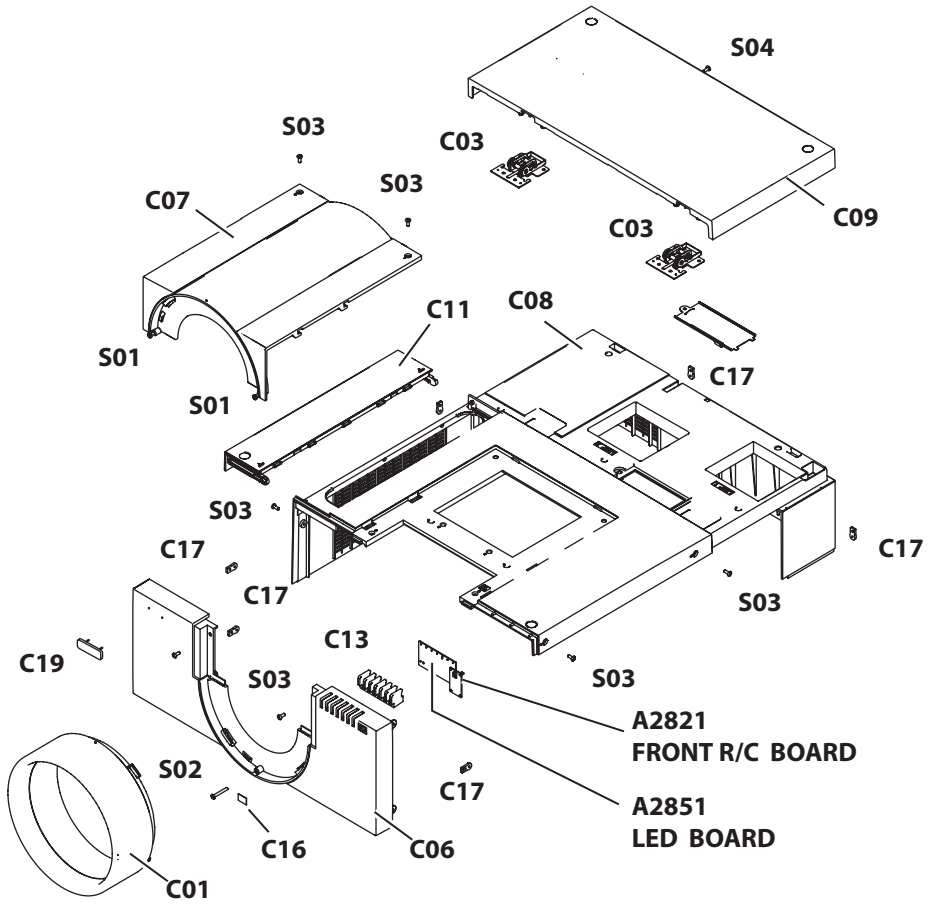

Cabinet bottom assembly

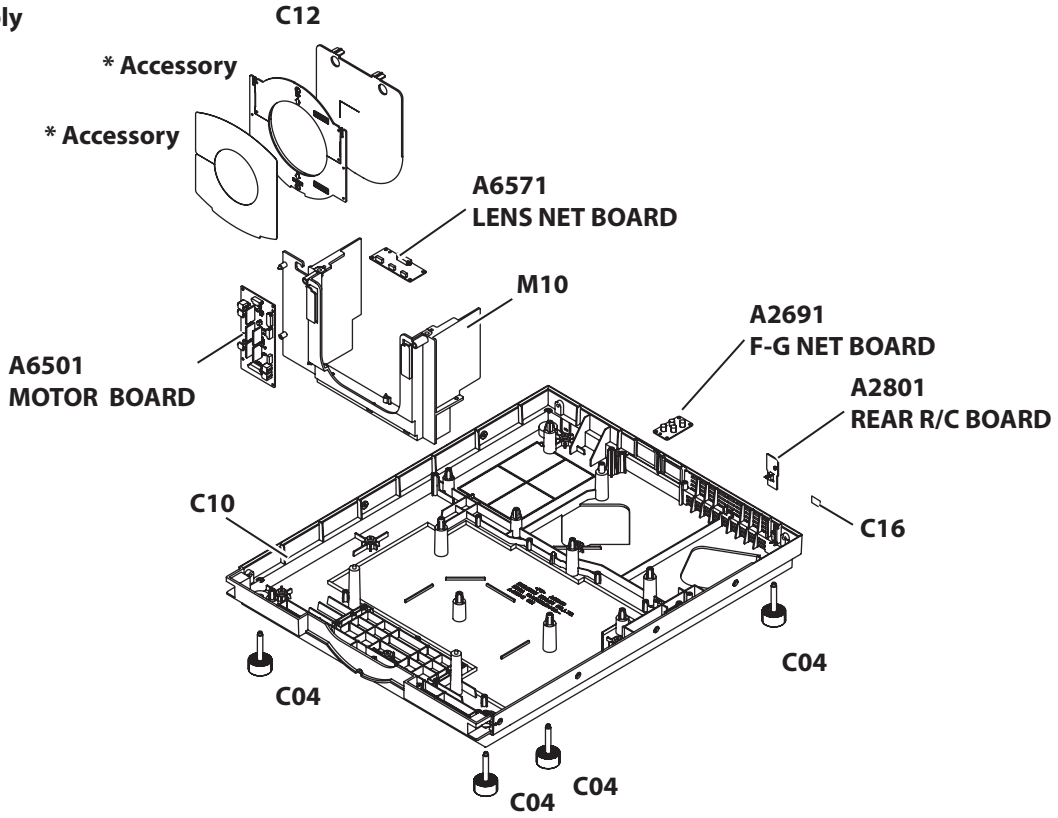

Parts Location Diagrams

AV panel assembly

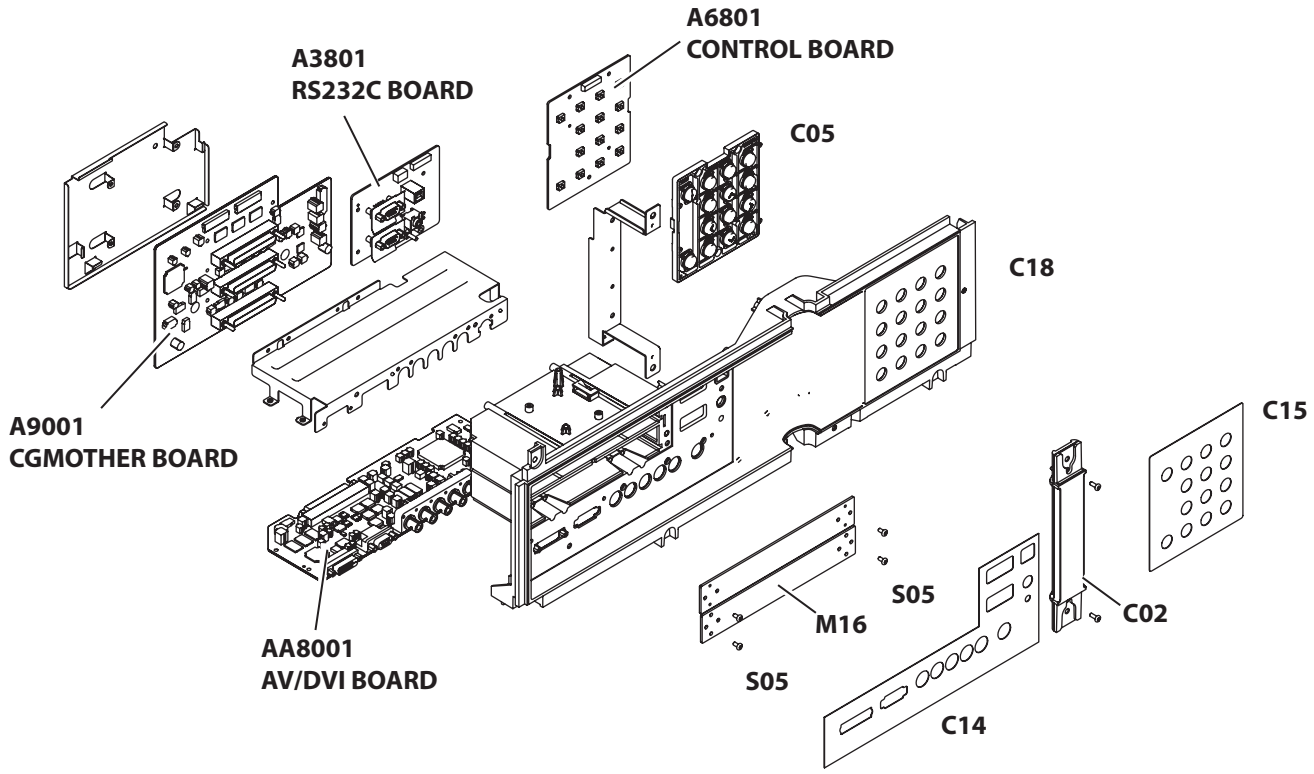

Filter holder assembly

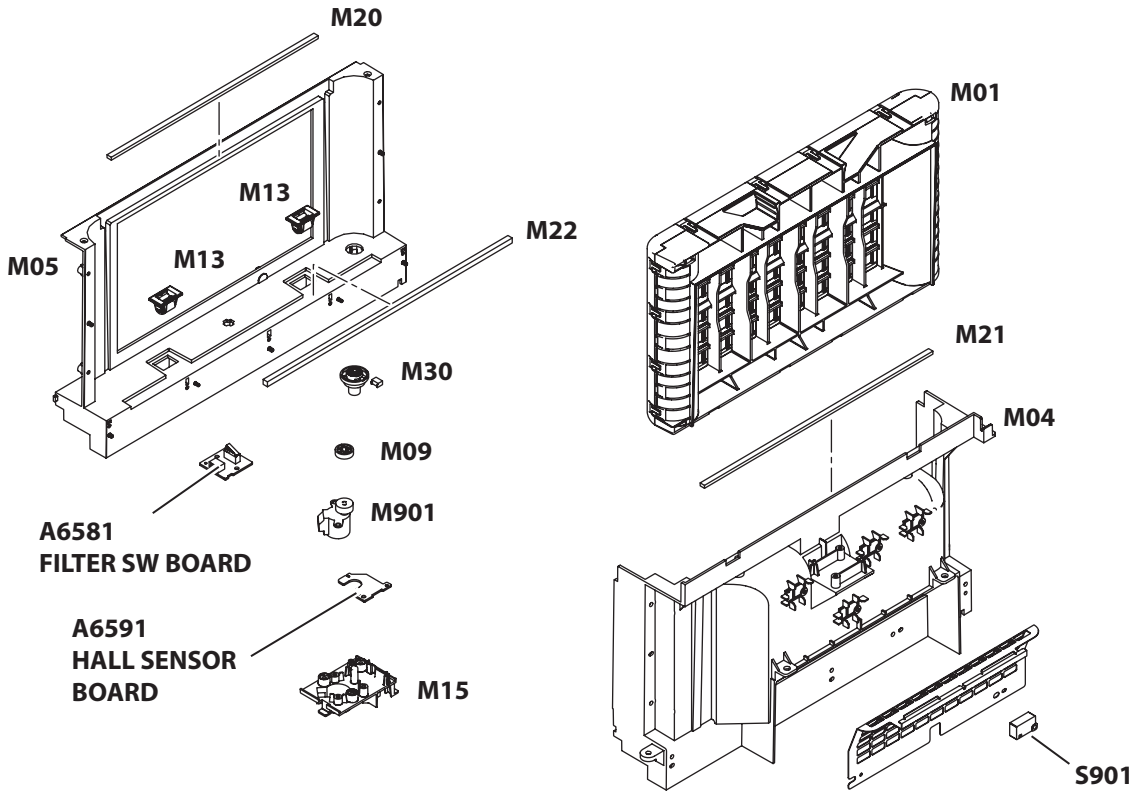

Parts Location Diagrams

Main board

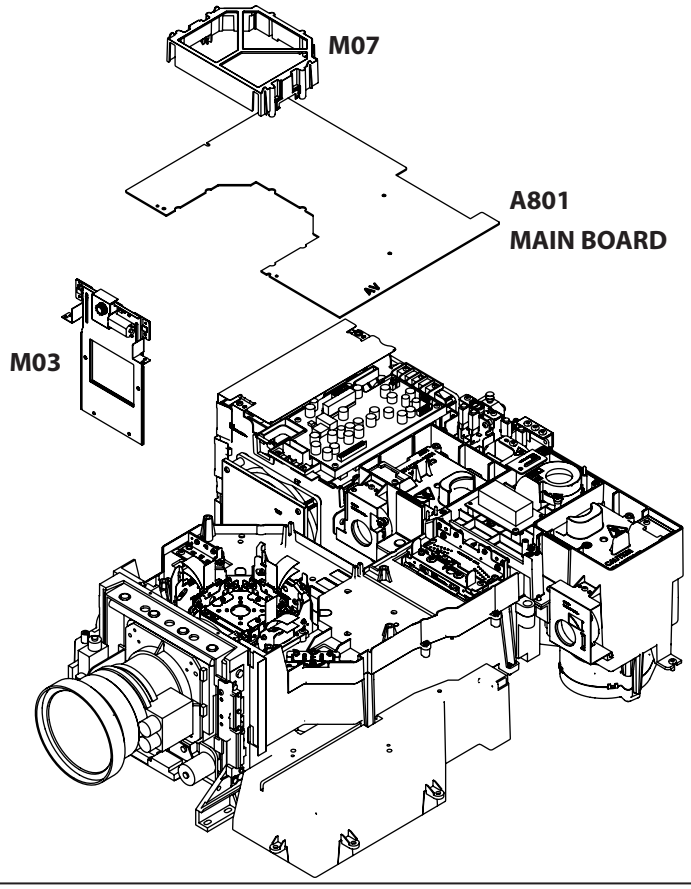

Duct cover and fans

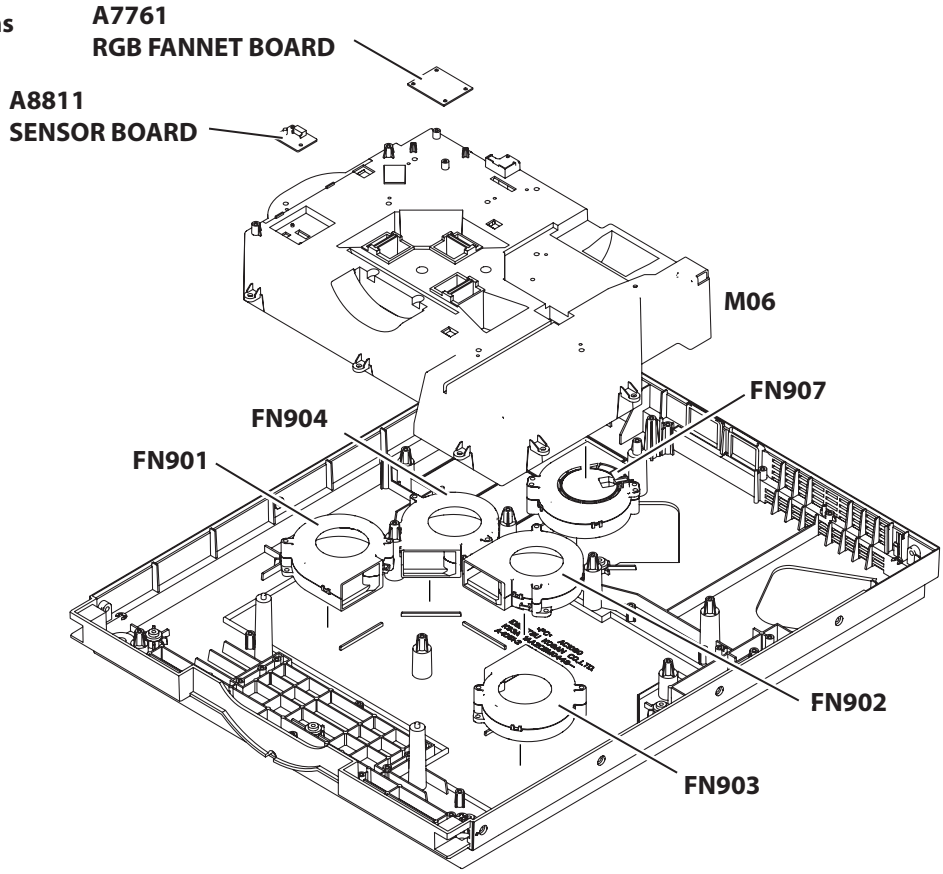

Parts Location Diagrams

Noise filter assembly

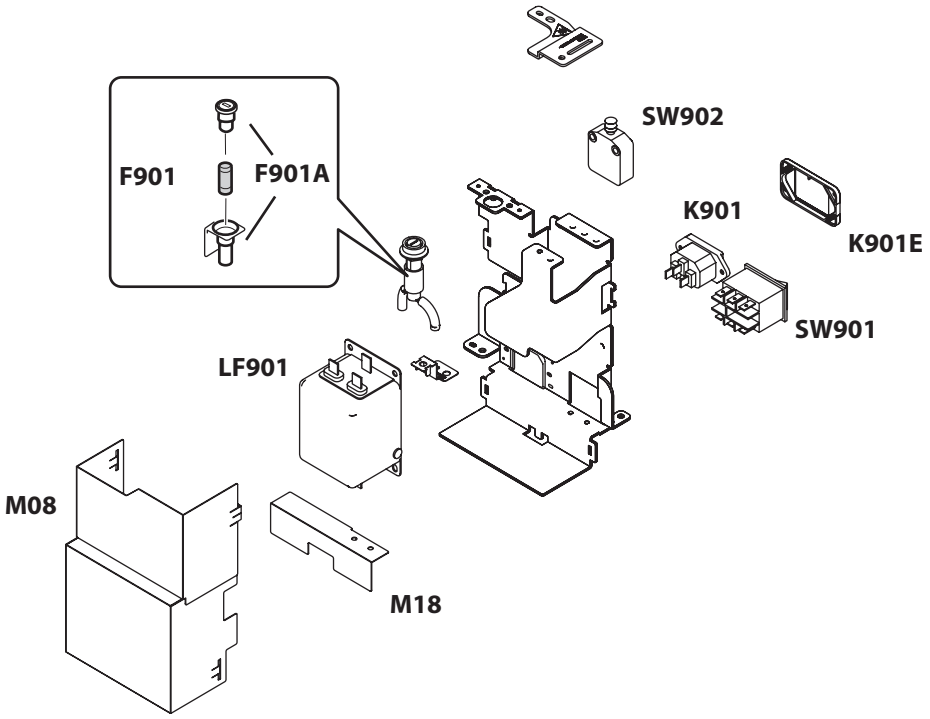

Power box assembly

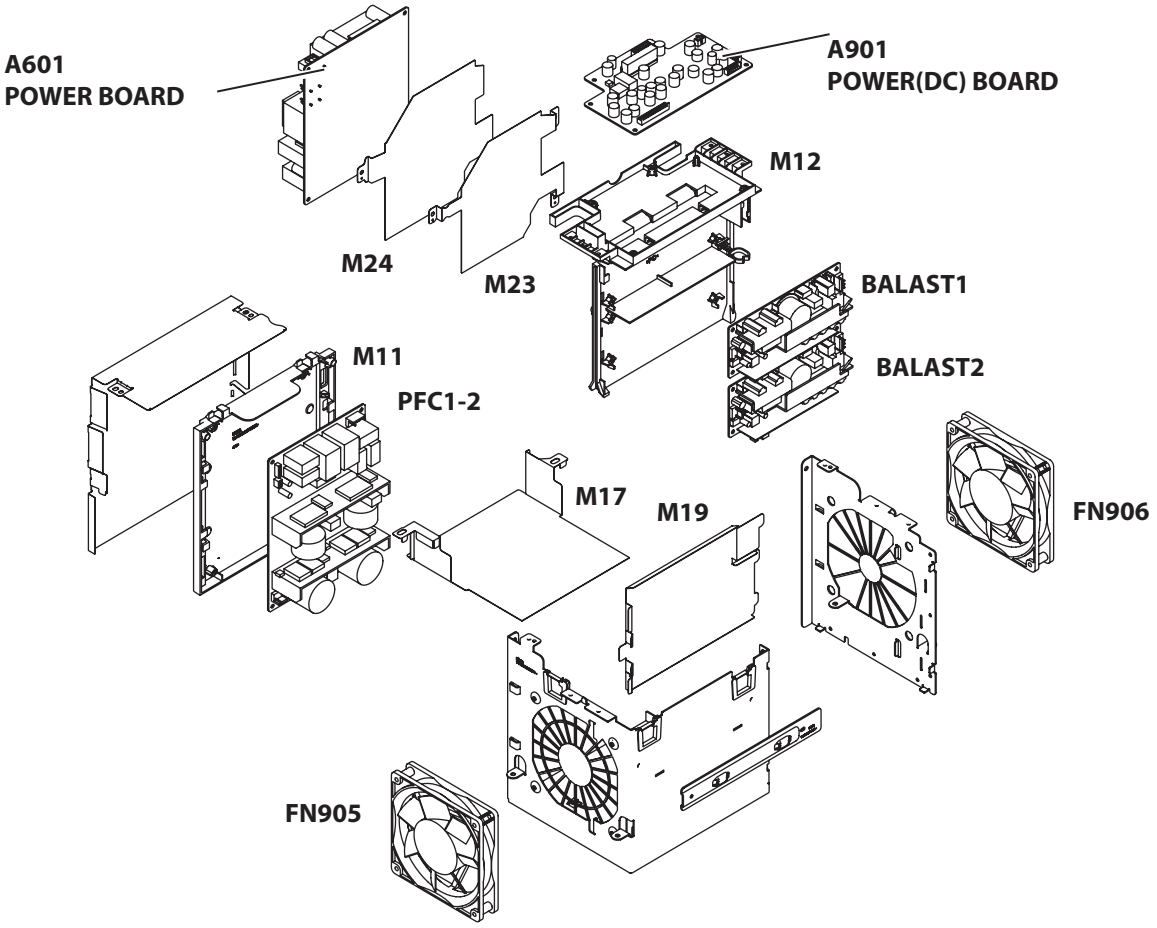

Parts Location Diagrams

Lens shift and optical unit

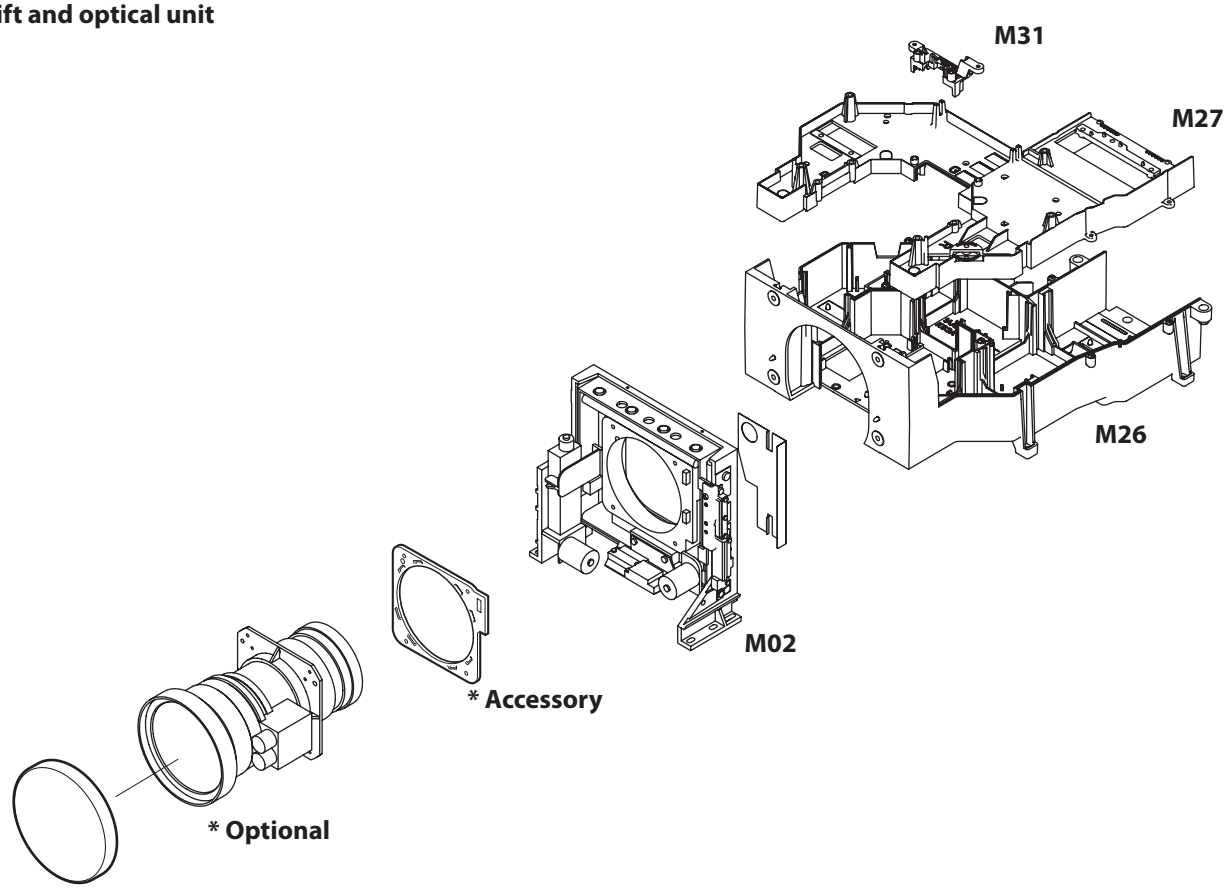

Lens shift assembly

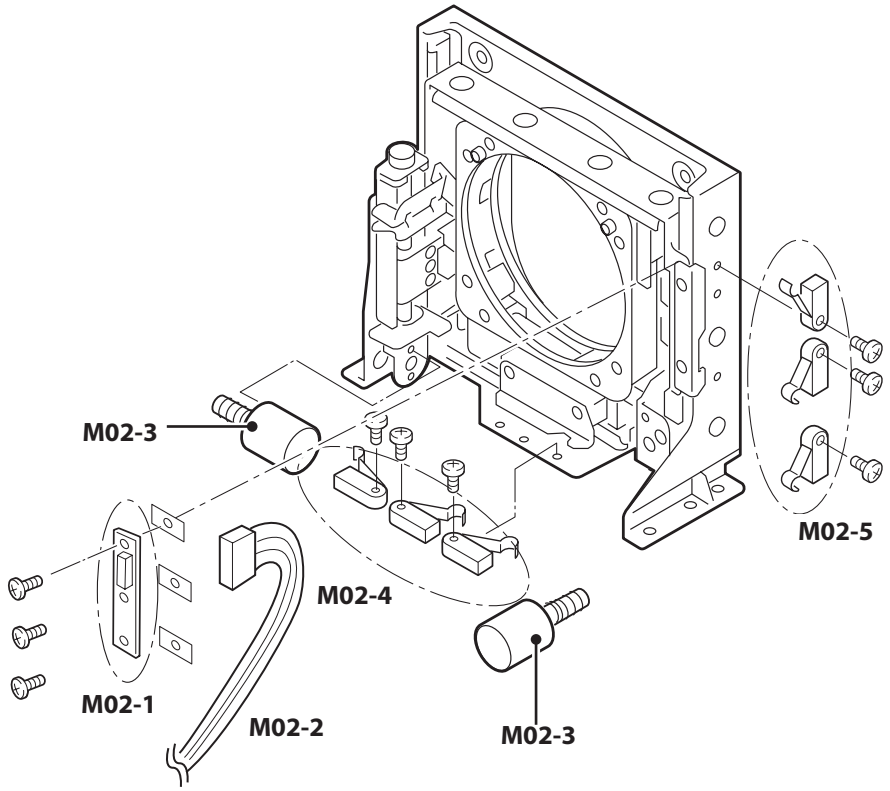

Parts Location Diagrams

Optical lamp assembly

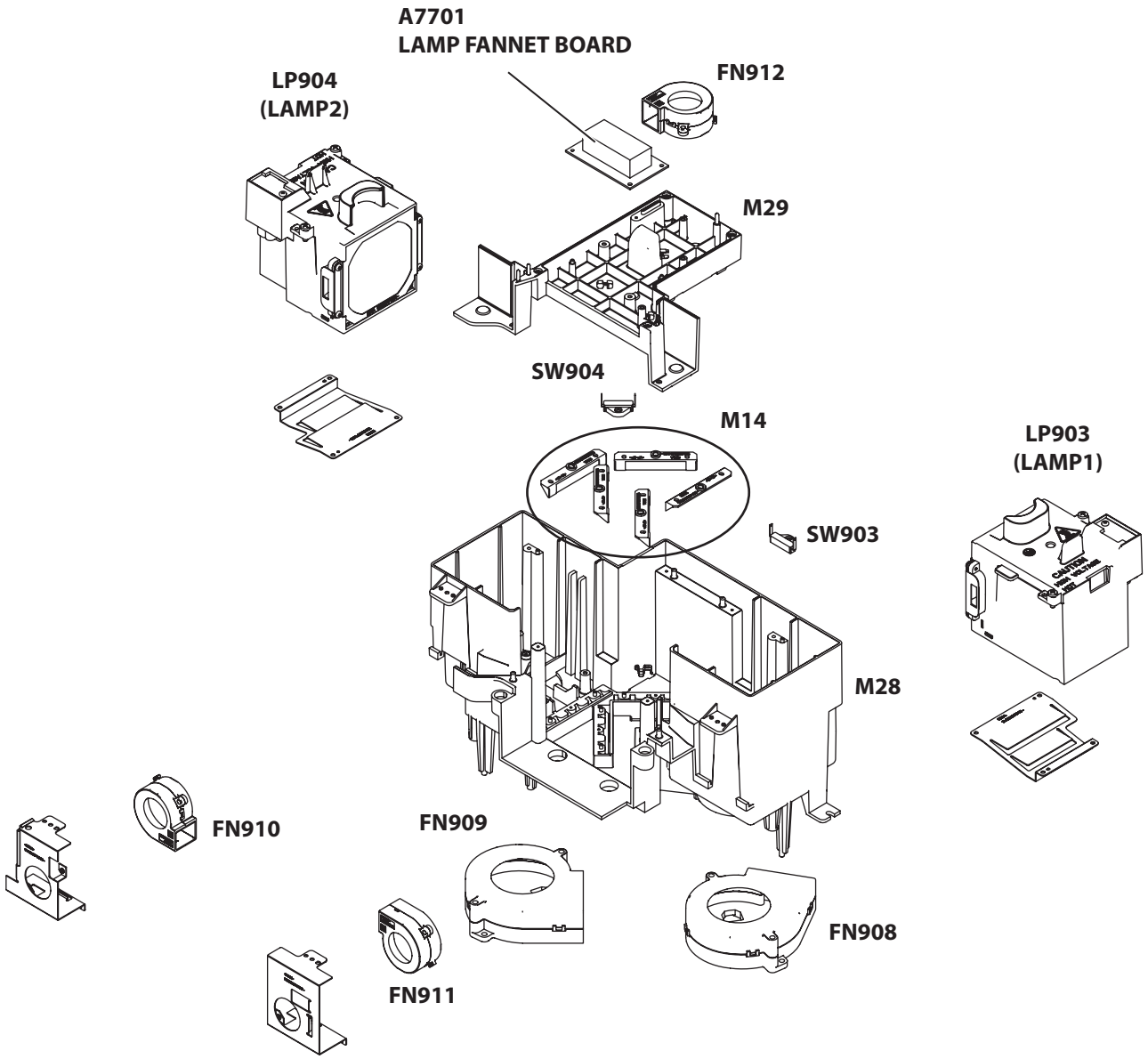

Parts Location Diagrams

Panel/Prism Assembly

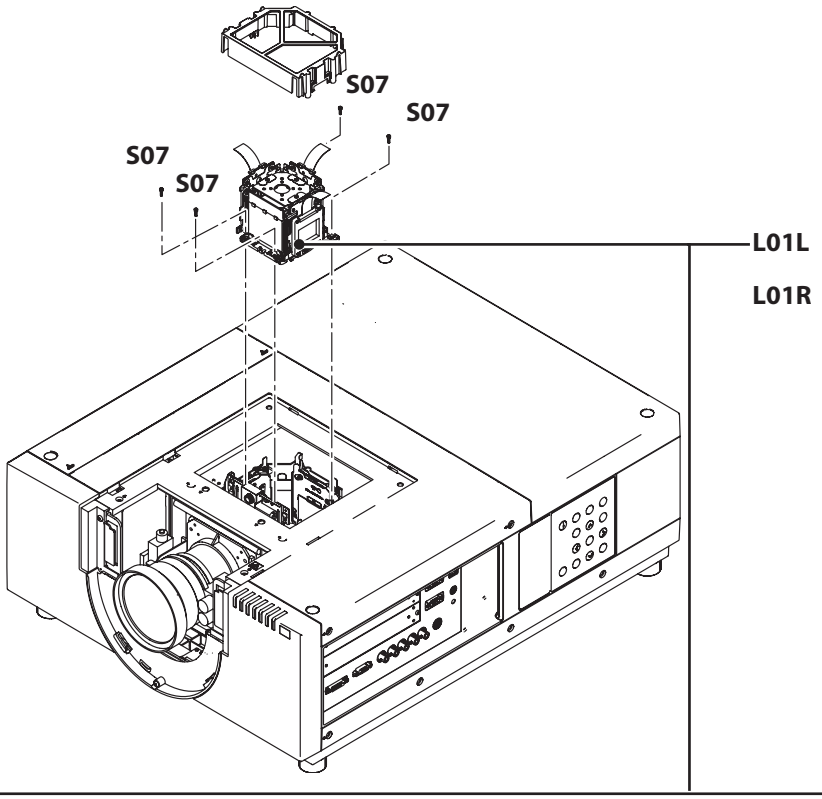

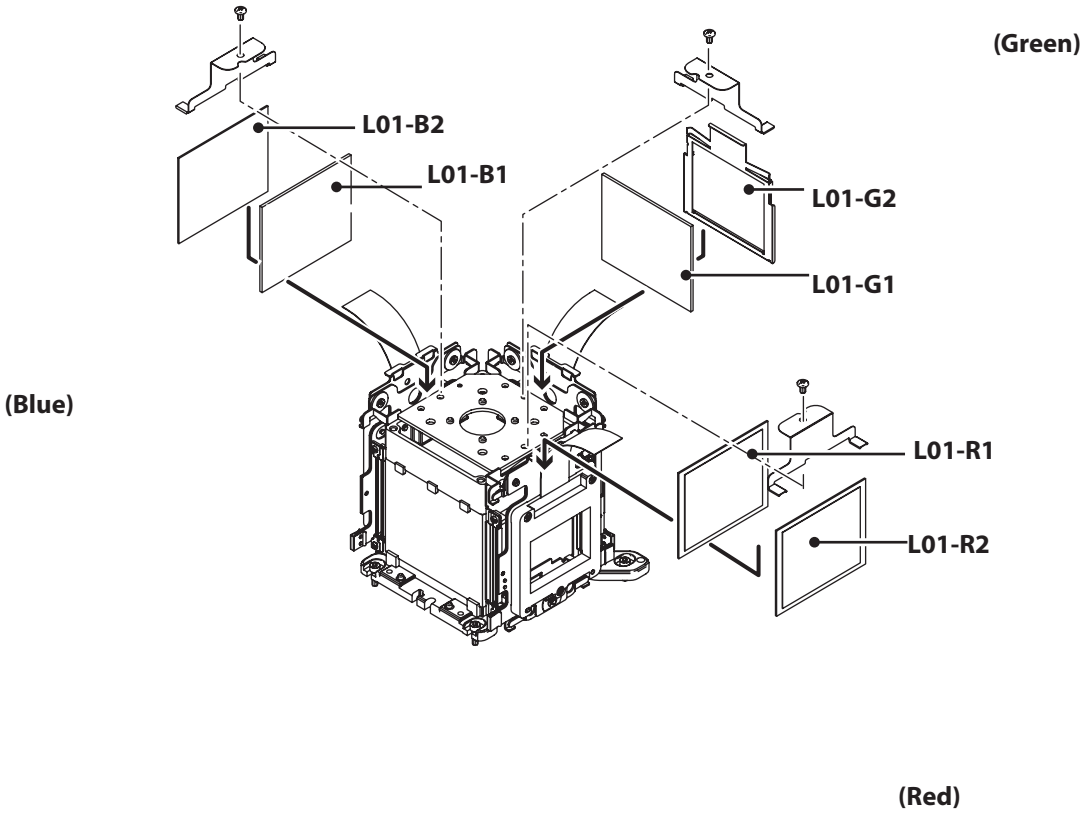

Parts Location Diagrams

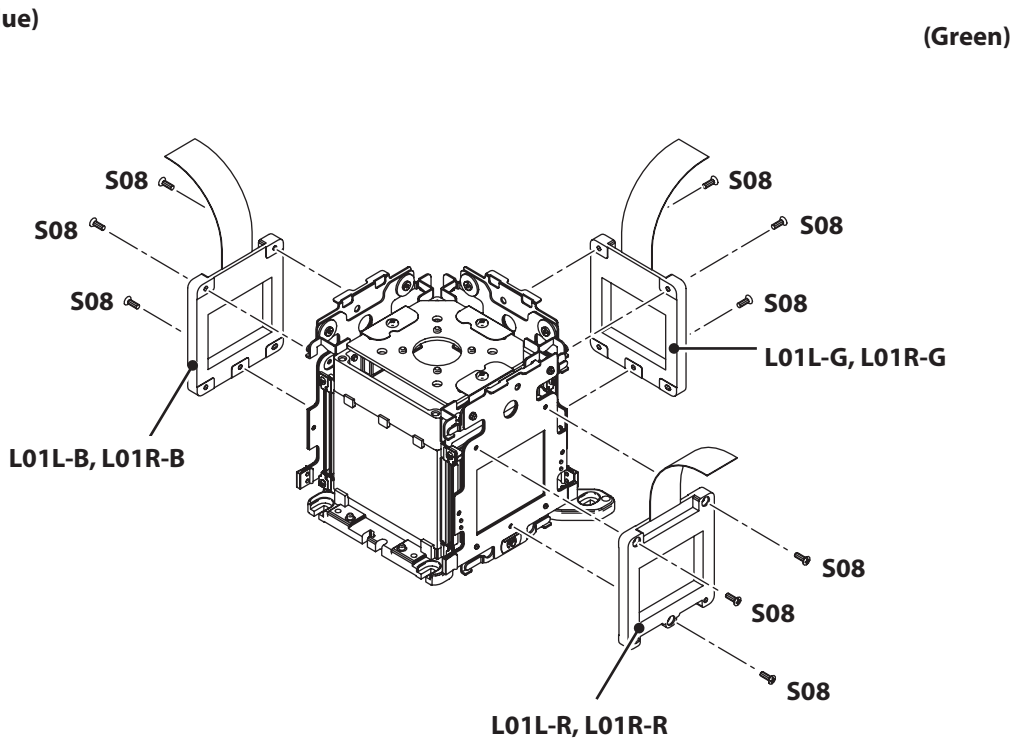

Note:
Parts for L01-R, L01-G and L01-B differ according to type of LCD panel/prism assembly.

Parts Location Diagrams

Polarized-In Assembly

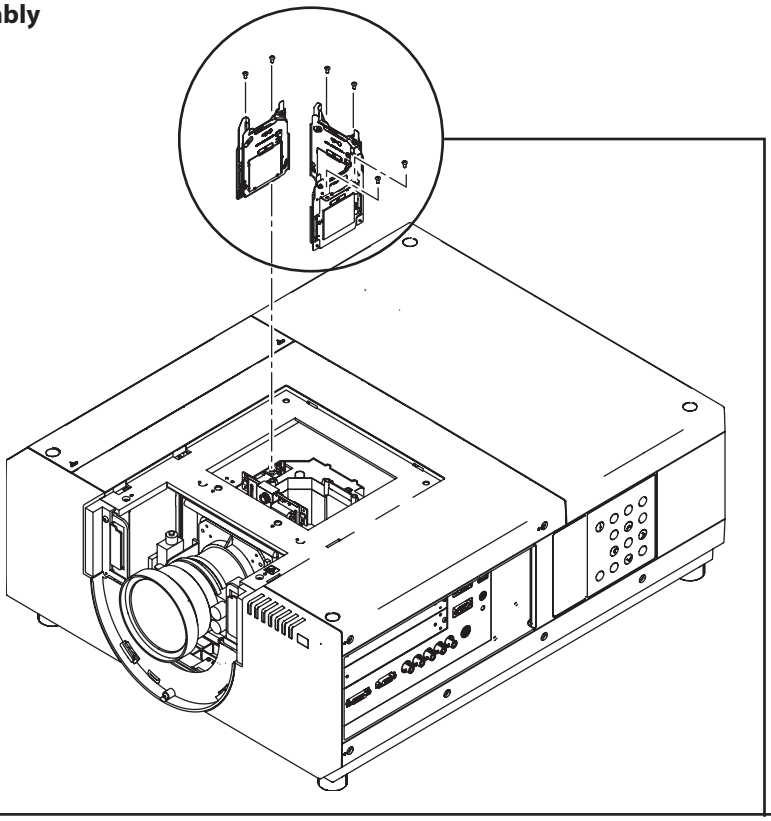

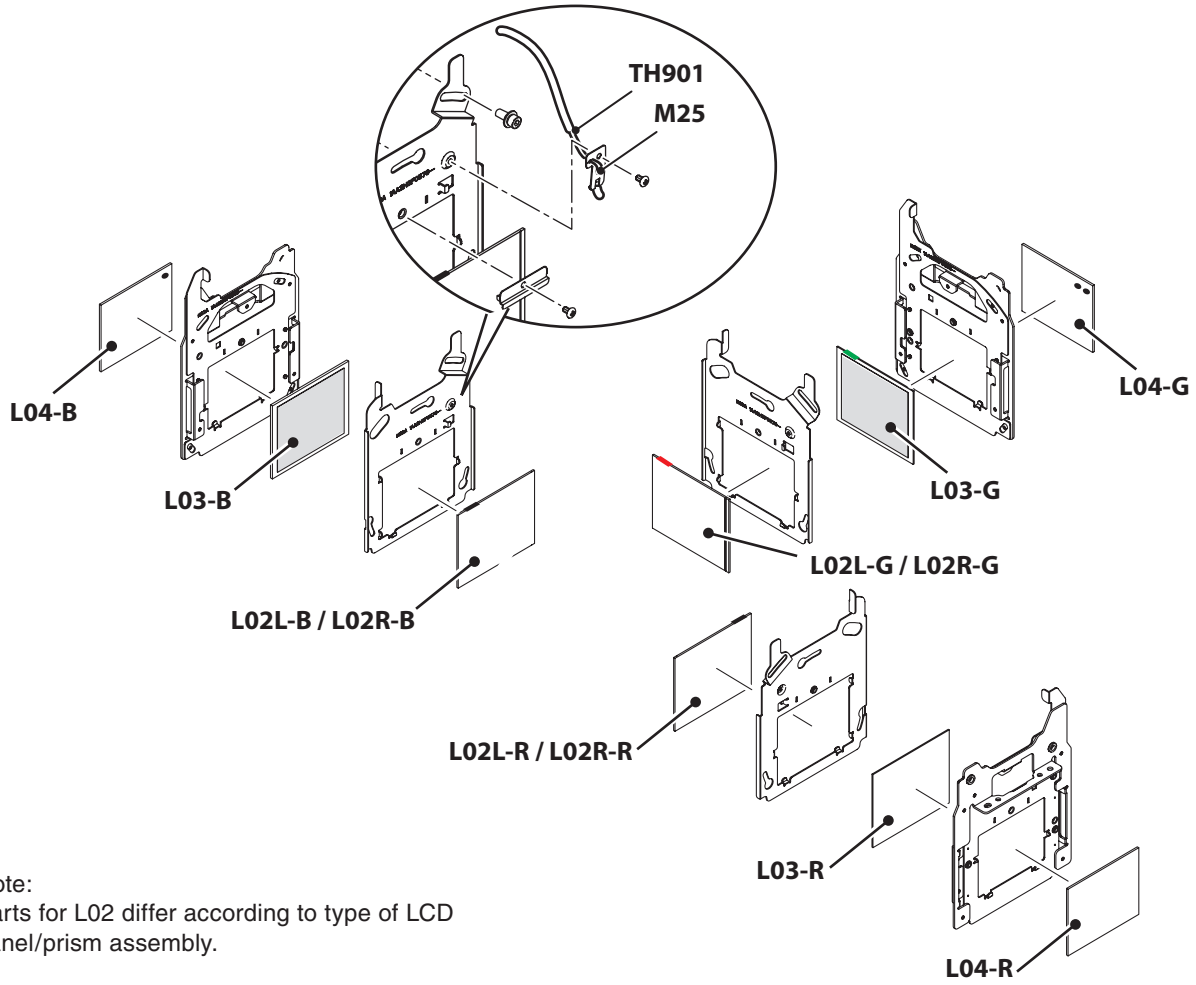

Note:
Parts for L02 differ according to type of LCD panel/prism assembly.

Parts Location Diagrams

Optical Filter (LC-CS)

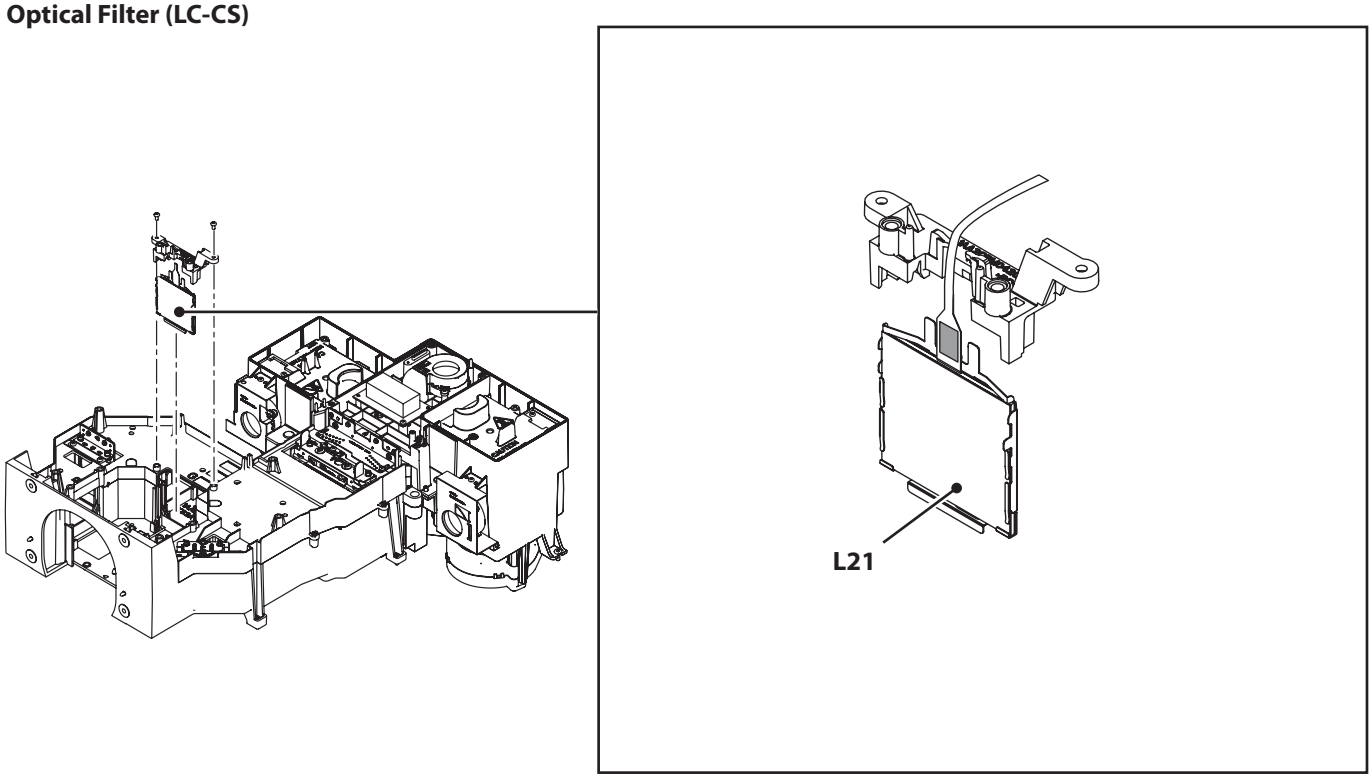

Integrator-In Assembly

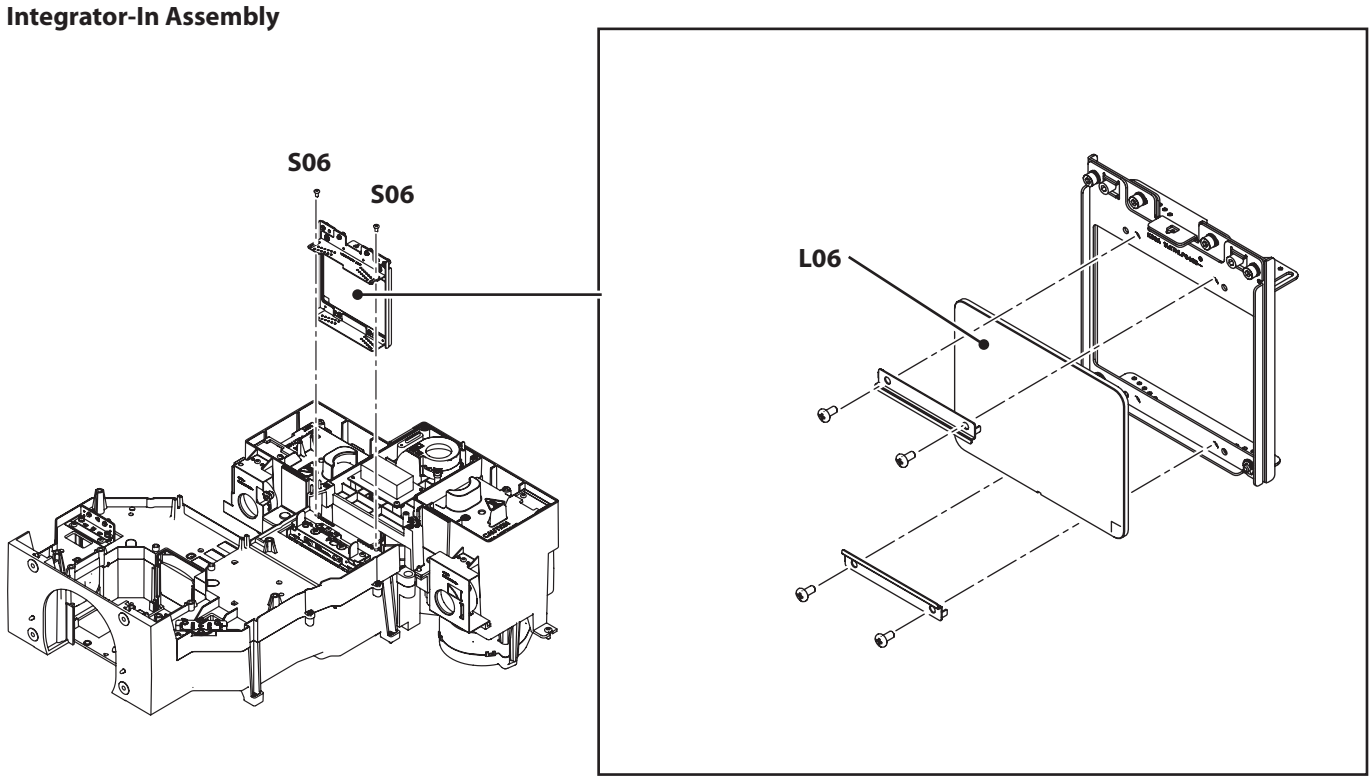

Parts Location Diagrams

Integrator-Out/PBS Assembly

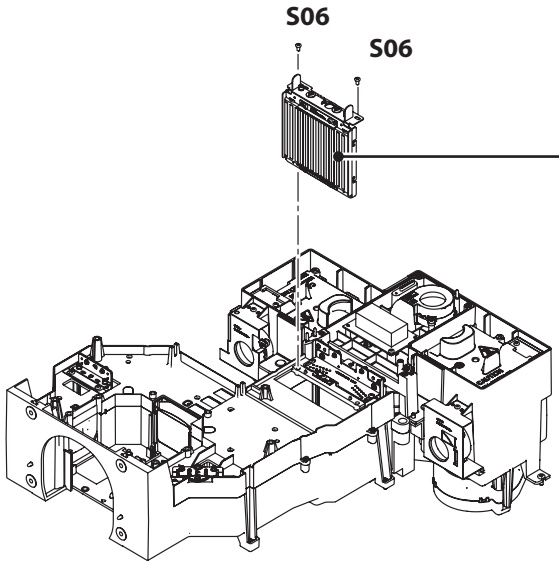

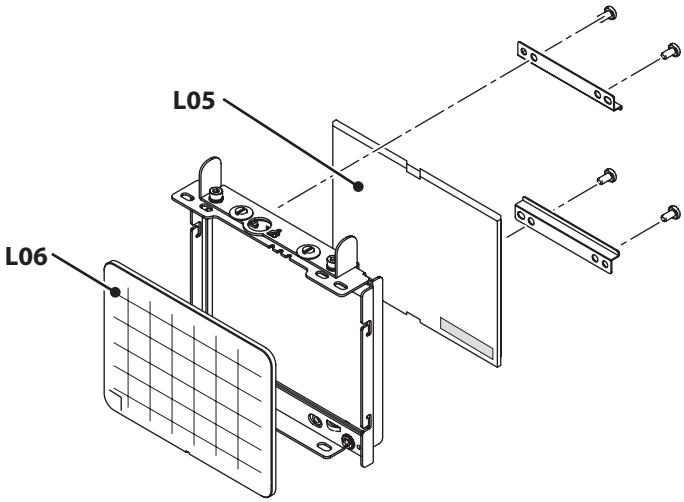

MIrror-R Assembly

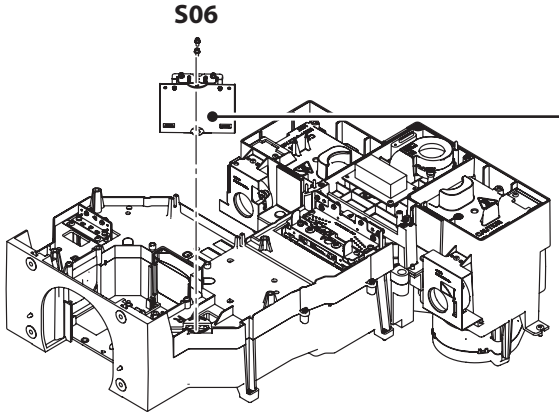

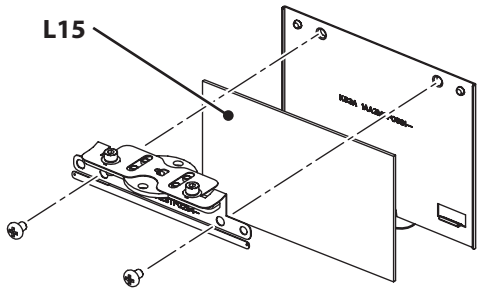

Parts Location Diagrams

Relay-In Assembly

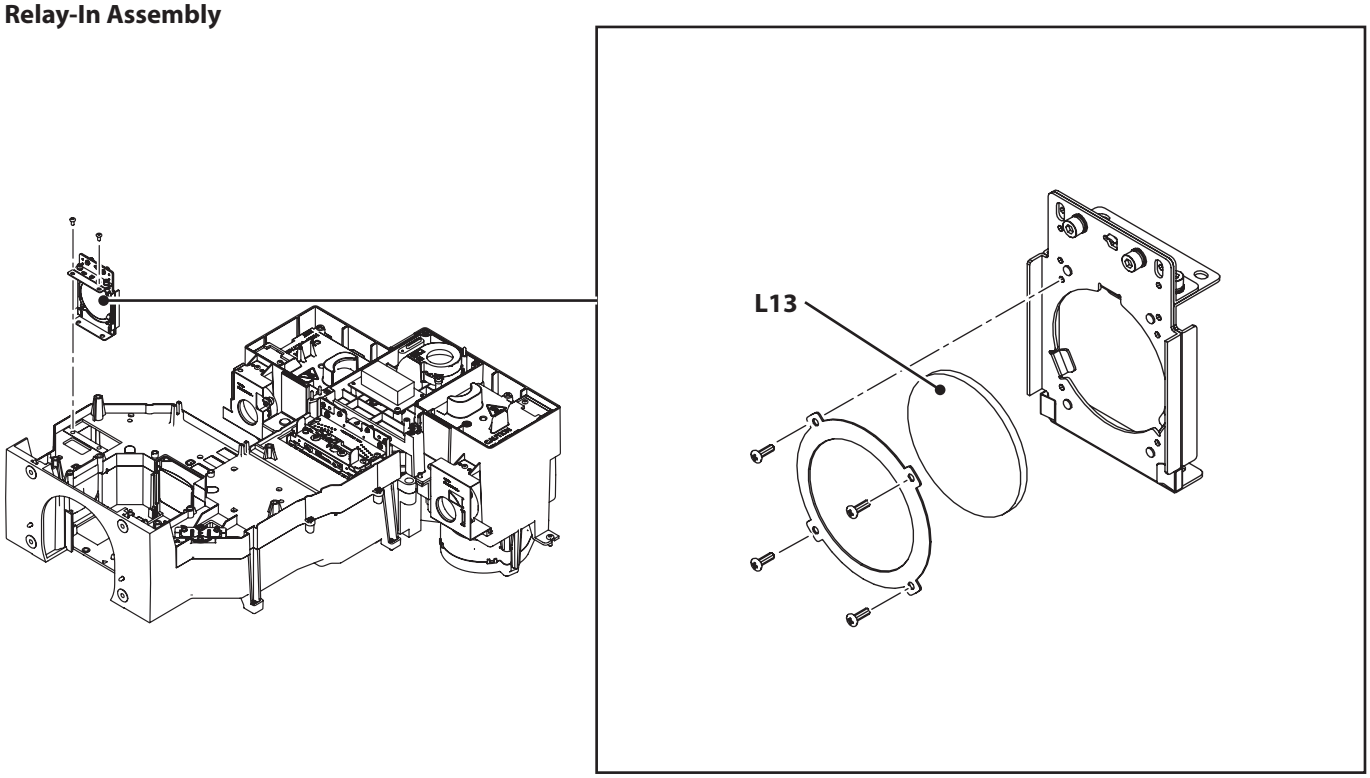

● In the Optical Lamp Unit

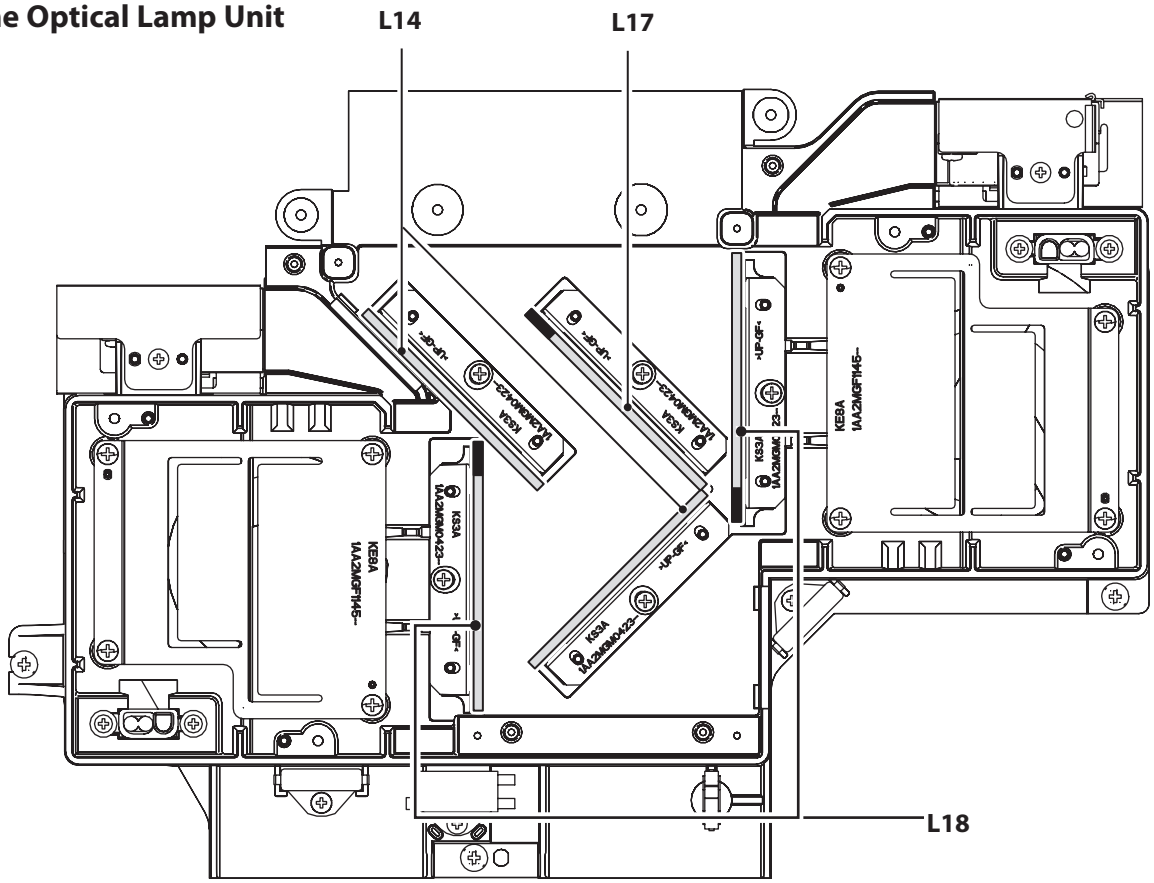

● In the Optical Unit

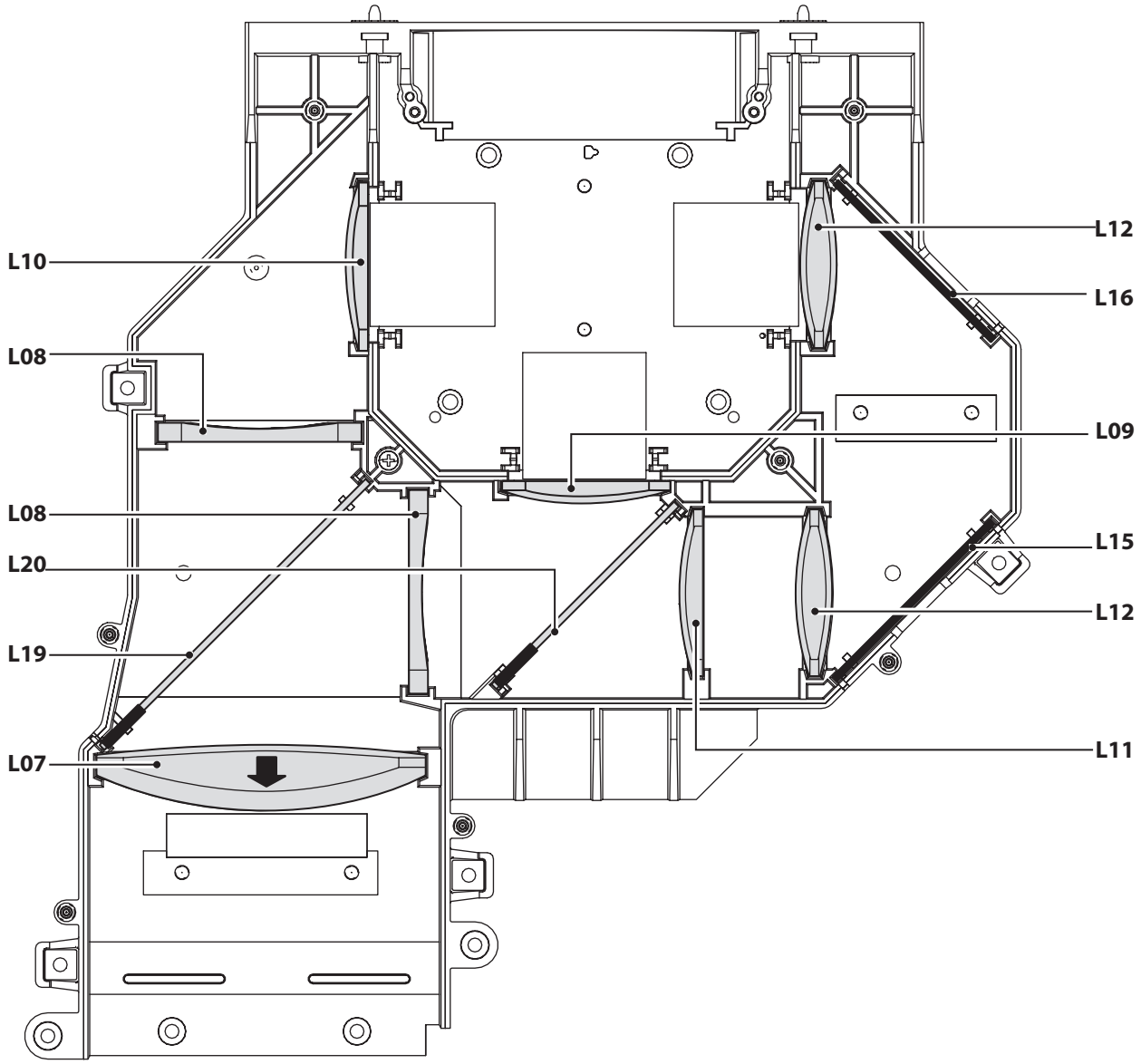

Parts Location Diagrams

● Accessories (see accessories parts list)

REMOTE CONTROL

QUICK SETUP GUIDE

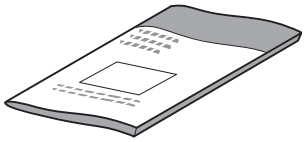

CD-ROM

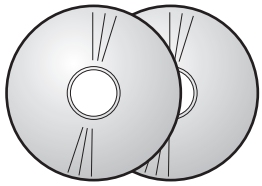

CABLE,INTERFACE

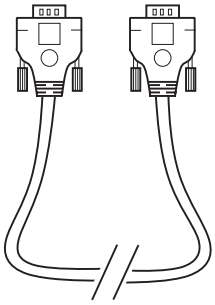

CORD,POWER

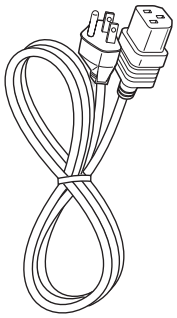

CABLE,FXAF

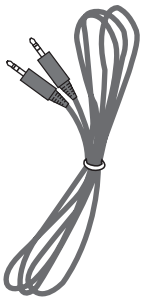

ASSY,SPACER

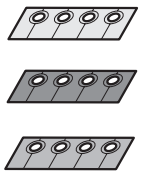

ASSY,COVER LENS
LARGE (FK2A)

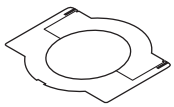

ASSY,COVER LENS
SMALL (FK2B)

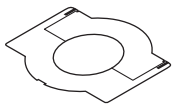

ASSY,COVER LENS
(W03)

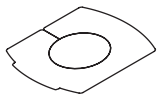

COMPL, MOUNTING LENS
(Lens Attachment: A-01)

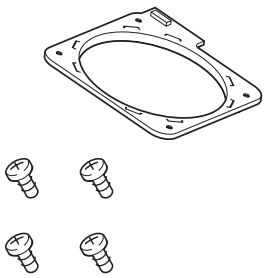

COMPL, MOUNTING LENS
(Lens Attachment: A- 02)

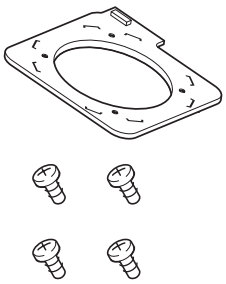

STOPPER CLAMPS

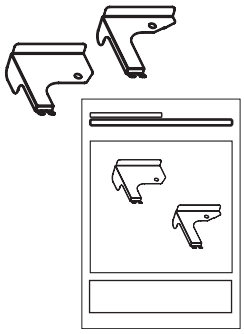

Mechanical Parts List

Note: Parts order must contain Chassis No., Part No., and Descriptions.

PACKING MATERIALS

Key No.	Part No.	Description
	910 285 9073	HANDLE CARTON-ML6A
	610 347 3949	CARTON CASE-KE8B
	610 337 1658	CUSHION SPACER-KS3A
	610 337 1672	CUSHION FNT-KS3A
	610 337 1740	CUSHION BACK-KS3A
	910 289 7235	REINFORCEMENT A-ML6A
	645 098 1937	POLY BAG-1800X1200*NC*R8P

ACCESSORIES

Key No.	Part No.	Description
OWNER'S MANUAL		
	610 346 5456	CD-ROM,OWNERS MANUAL-KE8B
	910 319 5347	COLOR MANAGE INST-B-MM7A
	610 346 5265	SETUP INST MANUAL-KE8B
	945 072 1121	CD-ROM (R.C. MANAGER)
REMOTE CONTROL		
	645 098 1111	ASSY,REMOCON CXZM
	610 342 0400	RC-BATTERY LID-CXZL
AC CORD		
US	945 069 2902	CORD,POWER-3.0MK,US
EU	945 066 7160	CORD,POWER-3.0MK,EU
HK	945 066 7153	CORD,POWER-3.138MK,UK
MISCELLANEOUS		
FK2B	610 337 0224	ASSY,COVER LNS SMALL-KS3A
FK2A	610 337 0064	ASSY,COVER LNS LARGE-KS3A
W03	610 337 9906	ASSY,COVER LENS W03-KE3A
A-01	910 303 8743	COMPL,MOUNTING LENS A-MT8A
A-02	910 304 6229	COMPL,MOUNTING LENS A-IDJK
	910 301 6659	ASSY,SPACER BF-MY8A
	910 319 0588	STRAP COMP-MM7A
	910 322 4276	COMPL,STPR CLAMP LNS SFT MM7A
	945 069 2155	CABLE,FXAF
	945 073 4855	CABLE,INTERFACE VGA
	645 093 1642	CABLE,INTERFACE VGA
	652 002 9552	CABLE,INTERFACE VGA

CABINET PARTS

Key No.	Part No.	Description
C01	610 337 3744	ASSY CABINET FNT RING-KS3B
C02	610 337 3577	ASSY,HANDLE-KS3B
C03	610 335 9939	ASSY HINGE-KS3A
C04	610 335 9755	COMPL,STAND LEG-KS3A
C05	610 337 3539	BUTTON A-KS3B
C06	610 337 4147	CABINET FRONT-KS3B
C07	610 337 3829	CABINET FRONT A-KS3B
C08	610 337 3812	CABINET TOP-KS3B
C09	610 347 3888	CAB TOP COVER SERVICE-KE8B
C10	610 341 9367	CABINET BOTTOM-KW7B
C11	610 337 4000	COVER FILTER-KS3B
C12	610 336 9686	COVER PROJ LNS-KE3A
C13	610 336 1727	DEC INLAY LED-KS3A
C14	610 337 3874	DEC SHEET AV-KS3B
C15	610 337 4154	DEC SHEET CTRL-KS3B
C16	610 336 1680	DEC RC SHEET-KS3A
C17	610 336 8528	NUT SPECIAL-KS3A
C18	610 337 3867	PANEL AV-KS3B
C19	910 287 2560	BADGE EIKI-ML6B

CHASSIS PARTS

Key No.	Part No.	Description
M01	610 335 9830	ASSY,BOX FILTER-KS3A
M02	910 311 5123	ASSY,HOLDER LNS B-MT8A
M02-1	910 303 9870	ASSY,PWB,LENS-BASE NET MT8A
M02-2	910 318 7175	CORD,4P LENS SHIFT
M02-3	945 042 7344	ASSY,MOTOR(ML6A)
M02-4	945 057 3225	SWITCH,SENSOR X
M02-5	945 057 3232	SWITCH,SENSOR Y
M03	610 335 9779	COMPL,MOUNTING SHUTTER-KS3A
M04	610 336 1833	CASE FILTER A-KS3A
M05	610 336 4889	CASE FILTER B-KS3A
M06	610 349 5262	SERVICE COVER DUCT MAIN-KE8A
M07	610 336 1673	COVER PSM DUST-KS3A
M08	610 336 2748	COVER LINE FILTER-KS3A
M09	610 334 3549	GEAR MOTOR-KC3A
M10	610 343 6814	HOLDER COVER LNS-KW7A
M11	610 346 3384	HOLDER POWER PFC-KE8A
M12	610 336 1840	HOLDER POWER MAIN-KS3A
M13	610 336 1949	LATCH FILTER-KS3A
M14	610 336 1796	MOUNTING MIR A-KS3A
M15	610 336 1925	MOUNTING GEAR FILTER-KS3A
M16	910 302 1172	PANEL COMP A-MY6K
M18	610 336 9693	SPACER AC INLET-KS3A
M17	610 346 3353	SPACER MAIN POWER BTM-KE8A
M19	610 346 3360	SPACER BST BLOW-KE8A
M20	610 338 1305	SPACER CASE FILTER A-KS3A
M21	610 338 1282	SPACER CASE FILTER B-KS3A
M22	610 338 1350	SPACER CASE FILTER C-KS3A
M23	610 337 9760	SHIELD POWER A-KS3A
M24	610 337 9692	SHIELD POWER SHEET-KS3A
M25	610 335 1551	STOPPER THERM-KE3A
M26	610 346 1489	OPTICAL BASE BTM-KE8A
M27	610 346 1496	OPTICAL BASE TOP-KE8A
M28	610 335 9663	OPTICAL LMP BTM-KS3A
M29	610 335 9809	OPTICAL LMP TOP-KS3A
M30	610 336 9921	COMP,HOLDER SHAFT FILTER-KC3A
M31	610 346 1472	COVER YE LCD-KE8A

SCREWS

Key No.	Part No.	Description
S01	412 076 8000	SPECIAL SCREW V
S02	411 193 4803	SCR BIN 4X30
S03	411 189 8709	SCR BIN 4X10
S04	312 069 6702	SPECIAL SCREW(BLACK)
S05	411 207 3402	SCR BIN+IN TW 3X6
S06	411 192 8703	BOLT HEX-SCT+SW+W 3X6
S07	411 191 2603	BOLT HEX-SCT+SW+W 2.5X8
S08	411 189 9805	SCR OVL 2X6

OPTICAL PARTS

Key No.	Part No.	Description
TYPE-L LDC PANEL/PRISM ASS'Y		
L01L	610 347 4403	ASSY,PNL/PSM L-KE8A
L01L-R	645 091 8186	LCD(LCX086AAB-7 R)
L01L-G	645 091 8193	LCD(LCX086ABB-8 G)
L01L-B	645 091 8209	LCD(LCX086AAB-6 B)

Mechanical Parts List

Key No.	Part No.	Description
TYPE-R LDC PANEL/PRISM ASS'Y		
L01R	610 347 4410	ASSY,PNL/PSM R-KE8A
L01R-R	645 091 8216	LCD(LCX086ABB-7 R)
L01R-G	645 091 8223	LCD(LCX086AAB-8 G)
L01R-B	645 091 8230	LCD(LCX086ABB-6 B)
COMMON		
* Key No. L01-R1 to L01-B2 are included in the LCD Panel/Prism Ass'y.		
L01-R1	645 098 2415	POLARIZED GLASS(OUT/R)
L01-R2	645 101 6461	PRE-POLARIZED GLASS(OUT)R
L01-G1	645 101 6485	POLARIZED GLASS(OUT/G)
L01-G2	645 101 6478	POLARIZED GLASS(OUT/G)
L01-B1	645 101 6508	POLARIZED GLASS(OUT/B)
L01-B2	645 101 6492	PRE-POLARIZED GLASS(OUT)B
L02L-R	645 092 7379	OPTICAL FILTER (HCP)R
L02L-G	645 092 7386	OPTICAL FILTER (HCP)L
L02L-B	645 092 7379	OPTICAL FILTER (HCP)R
L02R-R	645 092 7386	OPTICAL FILTER (HCP)L
L02R-G	645 092 7379	OPTICAL FILTER (HCP)R
L02R-B	645 092 7386	OPTICAL FILTER (HCP)L
L03-R	645 098 2392	POLARIZED GLASS(IN/R)
L03-G	645 092 9922	PREPOLARIZED GLASS(IN/G)
L03-B	645 092 9939	PREPOLARIZED GLASS(IN/B)
L04-R	645 092 9984	PREPOLARIZED GLASS(IN/R)
L04-G	645 102 4947	POLARIZED GLASS(IN/G)
L04-B	645 092 9915	POLARIZED GLASS(IN/GB)
L05	645 101 9073	PRISM(PBS)
L05	945 046 1331	ASSY,PRISM(PBS)
L06	645 095 0254	LENS,INTEGRATER
L07	645 095 0261	LENS,CONDENSER(IN)
L08	645 095 0278	LENS,CONDENSER(OUT)
L09	645 095 0285	LENS,CONDENSER(G)
L10	645 102 4572	LENS,CONDENSER(R)
L11	645 095 0308	LENS,CONDENSER(B)
L12	645 095 0315	LENS,RELAY(IN)
L13	645 097 3499	LENS,RELAY(OUT)
L14	645 095 0339	MIRROR(W-COLD)
L15	645 095 0346	MIRROR(R)
L16	645 095 0353	MIRROR(B)
L17	645 095 0407	MIRROR(HALF)
L18	645 095 0438	OPTICAL FILTER(UV/IR)
L19	645 101 9271	DICHROIC MIRROR (C)
L20	645 095 0421	DICHROIC MIRROR (Y)
L21	645 100 9739	OPTICAL FILTER(LC-CS)

* There are 2 types (Type-L or Type-R) of LCD Panel/Prism Ass'y. Used type is indicated on the Prism Ass'y and Optical unit top. Refer to item "LCD Panel/Prism Ass'y Removal" for further information.

ELECTRICAL SERVICE PARTS

	910 304 8209	ASSY,CG ADJUST LCD-MT8A
	610 337 6394	OPTICAL FILTER-S
	610 343 5596	PROJECTOR SERVICE CD-ROM V 4.20

Key No.	Part No.	Description

Electrical Parts List

Product safety should be considered when a component replacement is made in any area of a projector.
Components indicated by a ⚠ mark in this parts list and the circuit diagram show components whose value have special significance to product safety. It is particularly recommended that only parts specified on the following parts list be used for components replacement pointed out by the mark.

● Read Description in the parts list

Read description in the Capacitor and Resistor as follows:

CAPACITOR CERAMIC 100P K 50V

Rated Voltage

Tolerance Symbols:

Less than 10pF

A : Not specified	B : ±0.1pF	C : ±0.25pF
D : ±0.5pF	E : +0 -1pF	F : ±1PF
G : ±2pF	H : +0.1 -0pF	L : +0 -0.1pF
R : ±0.25 -0pF	S : +0-0.25pF	

More than 10pF

A : Not specified	B : ±0.1%	C : ±0.25%
D : ±0.5%	F : ±1%	G : ±2%
H : ±3%	J : ±5%	K : ±10%
L : ±15%	M : ±20%	N : ±30%
P : +100-0%	Q : +30-10%	T : +50-10%
U : +75-10%	V : +20-10%	W : +100-10%
X : +40-20%	Y : +150-10%	Z : +80-20%

Rated value: P=pico farad, U=micro farad

Material:

CERAMIC..... Ceramic
MT-PAPER..... Metallized Paper
POLYESTER..... Polyester
MT-POLYEST..... Metallized Polyester
POLYPRO..... Polypropylene
MT-POLYPRO.... Metallized Polypropylene
COMPO FILM..... Composite film
MT-COMPO..... Metallized Composite
STYRENE..... Styrene
TA-SOLID..... Tantalum Oxide Solid Electrolytic
AL-SOLID..... Aluminium Solid Electrolytic
ELECT..... Aluminum Foil Electrolytic
NP-ELECT..... Non-polarised Electrolytic
OS-SOLID..... Aluminium Solid with Organic Semiconductive Electrolytic
POS-SOLID..... Polymerized Organic Semiconductive
DL-ELECT..... Double Layered Electrolytic
PPS-FILM..... Polyphenylene Sulfide Film
MT-PPS-FILM..... Metalized Polyphenylene Sulfide Film
MT-PEN-FILM..... Metalized Polyethylenenaphthalate Film
CAPACITOR..... Other

RESISTOR CARBON 4.7K J A 1/4W

Rated Wattage

Performance Symbols:
A: General B: Non flammable Z: Low noise
Other: Temperature coefficient

T: ±10ppm/°C	U: ±25ppm/°C	C: ±50ppm/°C
D: ±100ppm/°C	E: ±200ppm/°C	F: ±250ppm/°C
G: ±350ppm/°C	H: ±1000ppm/°C±10%	W: ±1200ppm/°C±10%
Y: ±1400ppm/°C±10%	J: ±2000ppm/°C±10%	K: ±2400ppm/°C±10%
L: ±2700ppm/°C±10%	M: ±3000ppm/°C±10%	N: ±3300ppm/°C±10%
P: ±3600ppm/°C±10%	Q: ±3900ppm/°C±10%	R: ±4200ppm/°C±10%
S: ±4300ppm/°C±10%	V: ±4500ppm/°C±10%	X: ±8000ppm/°C±10%

Tolerance Symbols:

A: ±0.05%	B: ±0.1%	C: ±0.25%	D: ±0.5%
F: ±1%	G: ±2%	J: ±5%	K: ±10%
M: ±20%	P: +5-15%	Z: 0 ohm	

Rated value, ohms:
K: 1,000, M: 1,000,000

Material:

CARBON..... Carbon
MT-FILM..... Metal Film
OXIDE-MT..... Oxide Metal Film
SOLID..... Composition
MT-GLAZE..... Metal Glaze
WIRE WOUND... Wire Wound
CERAMIC RES.. Ceramic
FUSIBLE RES.... Fusible
RESISTOR ..... Other

Electrical Parts List

Key No.	Part No.	Description
ASSEMBLED BOARDS		
⚠ **A6501**	**610 341 5246**	**ASSY,PWB,MOTOR KW7A**
⚠ **A2851**	**610 341 5253**	**ASSY,PWB.LED KW7A**
⚠ **A2821**	**610 341 5260**	**ASSY,PWB,FRONT R/C KW7A**
⚠ **A2801**	**610 341 5277**	**ASSY,PWB,REAR R/C KW7A**
⚠ **A601**	**610 341 5307**	**ASSY,PWB,POWER KW7A**
⚠ **A6571**	**610 341 5291**	**ASSY,PWB,LENS NET KW7A**
⚠ **A9001**	**610 341 5338**	**ASSY,PWB,CGMOTHER KW7A**
⚠ **A8811**	**610 341 5376**	**ASSY,PWB,SENSOR KW7A**
⚠ **A6581**	**610 341 5406**	**ASSY,PWB,FILTER SW KW7A**
⚠ **A2691**	**610 341 5383**	**ASSY,PWB,F-G NET KW7A**
⚠ **A7761**	**610 341 5390**	**ASSY,PWB,RGB FANNET KW7A**
⚠ **A6591**	**610 341 5413**	**ASSY,PWB,HALL SENSOR KW7A**
⚠ **A3801**	**610 348 4860**	**ASSY,PWB,RS232C KE8A**
⚠ **A7701**	**610 348 4877**	**ASSY,PWB,LAMP FANNET KE8A**
⚠ **A6801**	**610 346 0444**	**ASSY,PWB,CONTROL KE8A**
⚠ **A801**	**610 347 5745**	**ASSY,PWB,MAIN KE8B**
⚠ **AA8001**	**610 347 5721**	**ASSY,PWB,AV/DVI .KE8A**
OUT OF CIRCUIT BOARD		
L901	945 044 3818	CORE,CLAMP
	945 050 8418	CORE,CLAMP
L902	945 044 3818	CORE,CLAMP
	945 050 8418	CORE,CLAMP
L903	945 044 3818	CORE,CLAMP
	945 050 8418	CORE,CLAMP
L904	945 044 3818	CORE,CLAMP
	945 050 8418	CORE,CLAMP
L906	945 020 3641	CORE,FERRITE
⚠ LF901	945 054 3228	UNIT,NOISE FILTER
⚠ LP903	610 341 9497	COMPL,OPT LMP-KW7A
⚠ LP904	610 341 9497	COMPL,OPT LMP-KW7A
⚠ A901	645 098 1654	UNIT,POWER(DC)
⚠ BALAST1	645 093 0980	UNIT,BALLAST
	610 344 3669	CABLE,BALLAST SERVICE KW7A
⚠ BALAST2	645 093 0980	UNIT,BALLAST
	610 344 3669	CABLE,BALLAST SERVICE KW7A
⚠ F901	323 028 4202	FUSE 300V 15A
F901A	645 089 9355	HOLDER,FUSE
⚠ FN901	645 095 0698	MOTOR,BLW DC 9.24W
⚠ FN902	645 095 0698	MOTOR,BLW DC 9.24W
⚠ FN903	645 095 0704	MOTOR,BLW DC 9.24W
⚠ FN904	645 095 0698	MOTOR,BLW DC 9.24W
⚠ FN905	645 101 1770	MOTOR,FAN DC 2.28W
⚠ FN906	645 101 1770	MOTOR,FAN DC 2.28W
⚠ FN907	645 095 0704	MOTOR,BLW DC 9.24W
⚠ FN908	945 078 8780	MOTOR,BLW DC 7.08W
⚠ FN909	945 078 8780	MOTOR,BLW DC 7.08W
⚠ FN910	645 095 3781	MOTOR,BLW DC 2.76W
⚠ FN911	645 095 3781	MOTOR,BLW DC 2.76W
⚠ FN912	645 095 0742	MOTOR,BLW DC 2.76W
K80A1	312 067 3604	SPECIAL SCREW
K80A2	312 067 3604	SPECIAL SCREW
⚠ K901	945 040 7599	SOCKET,INLET AC 3P
K901D	610 337 9852	HOLDER AC INLET US-KS3A
K901E	610 336 1703	HOLDER INLET 15A BASE-KS3A
M901	645 093 2571	MOTOR,DC 12V
⚠ PFC1-2	645 100 3232	UNIT,POWER
S901	645 093 2533	UNIT,WIND VELOCITY SENSOR
⚠ SW901	945 086 6471	SWITCH,POWER 4P-2TX2
⚠ SW902	945 076 8164	SWITCH,PUSH 1P-2TX1
⚠ SW903	945 043 5967	SWITCH,REED
	645 102 4527	SWITCH,REED
⚠ SW904	945 043 5967	SWITCH,REED
	645 102 4527	SWITCH,REED
TH901	945 079 7768	SWITCH,THERMAL,THERMISTOR
W902	610 335 5665	CORD,SHIELD 40P(GRAY)
W903	610 335 5658	CORD,SHIELD 40P(BLACK)
WK21B91B	610 335 3111	CORD,SHIELD 1P
WK21G91G	610 335 3111	CORD,SHIELD 1P
WK21R91R	610 335 3111	CORD,SHIELD 1P

A6501 610 341 5246 ASSY,PWB,MOTOR KW7A

INTEGRATED CIRCUIT

IC5531	309 114 4806	IC LB1641-E		
IC5551	309 114 4806	IC LB1641-E		
IC6501	309 085 1903	IC LB1645N-E		
IC6502	309 085 1903	IC LB1645N-E		
IC6551	309 114 4806	IC LB1641-E		
IC6552	309 394 9310	IC TC7SH14FU(TE85L)		
IC6553	309 394 9310	IC TC7SH14FU(TE85L)		

CAPACITOR

C5531	303 215 2214	CERAMIC	0.01U K	50V
C5532	303 215 2214	CERAMIC	0.01U K	50V
C5534	303 215 2214	CERAMIC	0.01U K	50V
C5551	303 215 2214	CERAMIC	0.01U K	50V
C5552	303 215 2214	CERAMIC	0.01U K	50V
C5553	303 393 0019	ELECT	470U M	25V
C5554	303 393 0019	ELECT	470U M	25V
C5555	303 215 2214	CERAMIC	0.01U K	50V
C6501	303 215 2214	CERAMIC	0.01U K	50V
C6502	303 281 5218	CERAMIC	0.22U Z	16V
C6504	303 393 0019	ELECT	470U M	25V
C6505	303 393 0019	ELECT	470U M	25V
C6506	303 215 2214	CERAMIC	0.01U K	50V
C6507	303 215 2214	CERAMIC	0.01U K	50V
C6508	303 281 5218	CERAMIC	0.22U Z	16V
C6510	303 215 2214	CERAMIC	0.01U K	50V
C6541	303 342 3313	CERAMIC	0.1U K	25V
C6542	303 342 3313	CERAMIC	0.1U K	25V
C6543	303 342 3313	CERAMIC	0.1U K	25V
C6551	303 342 3313	CERAMIC	0.1U K	25V
C6552	303 342 3313	CERAMIC	0.1U K	25V
C6553	303 342 3313	CERAMIC	0.1U K	25V
C6554	303 215 2214	CERAMIC	0.01U K	50V
C6555	303 394 1312	ELECT	100U M	6.3V
	303 427 9315	ELECT	100U M	6.3V
	303 387 4917	ELECT	100U M	6.3V
C6556	303 342 3313	CERAMIC	0.1U K	25V
C6558	303 342 3313	CERAMIC	0.1U K	25V
C6559	303 342 3313	CERAMIC	0.1U K	25V
C6560	303 358 8319	CERAMIC	1U K	10V
C6561	303 215 2214	CERAMIC	0.01U K	50V
C6562	303 215 2214	CERAMIC	0.01U K	50V
C6563	303 393 0019	ELECT	470U M	25V
C6564	303 393 0019	ELECT	470U M	25V
C6565	303 215 2214	CERAMIC	0.01U K	50V

RESISTOR

R5531	301 162 3117	MT-GLAZE	3.3K JA	1/10W
R5532	301 162 3117	MT-GLAZE	3.3K JA	1/10W
R5533	301 255 5813	MT-GLAZE	2K JA	1/10W
R5534	301 150 6014	MT-GLAZE	0.000 ZA	1/10W

Electrical Parts List

Key No.	Part No.	Description
R5535	301 255 5813	MT-GLAZE 2K JA 1/10W
R5551	301 162 3117	MT-GLAZE 3.3K JA 1/10W
R5552	301 162 3117	MT-GLAZE 3.3K JA 1/10W
R5553	301 255 5813	MT-GLAZE 2K JA 1/10W
R5554	301 255 5813	MT-GLAZE 2K JA 1/10W
R5555	301 150 6014	MT-GLAZE 0.000 ZA 1/10W
R6501	301 162 3117	MT-GLAZE 3.3K JA 1/10W
R6502	301 162 3117	MT-GLAZE 3.3K JA 1/10W
R6503	301 150 6212	MT-GLAZE 1K JA 1/10W
R6504	301 150 6014	MT-GLAZE 0.000 ZA 1/10W
R6505	301 162 3117	MT-GLAZE 3.3K JA 1/10W
R6506	301 162 3117	MT-GLAZE 3.3K JA 1/10W
R6507	301 150 6212	MT-GLAZE 1K JA 1/10W
R6508	301 150 6014	MT-GLAZE 0.000 ZA 1/10W
R6552	301 150 5918	MT-GLAZE 10K JA 1/10W
R6553	301 150 5918	MT-GLAZE 10K JA 1/10W
R6554	301 150 5819	MT-GLAZE 100K JA 1/10W
R6555	301 150 5819	MT-GLAZE 100K JA 1/10W
R6556	301 255 9217	MT-GLAZE 6.2K JA 1/10W
R6557	301 255 9217	MT-GLAZE 6.2K JA 1/10W
R6561	301 162 3117	MT-GLAZE 3.3K JA 1/10W
R6562	301 162 3117	MT-GLAZE 3.3K JA 1/10W
R6563	301 255 5813	MT-GLAZE 2K JA 1/10W
R6564	301 255 5813	MT-GLAZE 2K JA 1/10W
R6565	301 150 6014	MT-GLAZE 0.000 ZA 1/10W
COIL		
L6551	945 049 1680	IMPEDANCE,60 OHM P
L6552	945 049 1680	IMPEDANCE,60 OHM P
L6553	945 049 1680	IMPEDANCE,60 OHM P
L6554	945 049 1680	IMPEDANCE,60 OHM P
L6555	945 049 1680	IMPEDANCE,60 OHM P
L6556	945 049 1680	IMPEDANCE,60 OHM P
L6557	945 049 1680	IMPEDANCE,60 OHM P
L6558	945 049 1680	IMPEDANCE,60 OHM P
L6559	945 049 1680	IMPEDANCE,60 OHM P
L6560	945 049 1680	IMPEDANCE,60 OHM P
L6561	945 049 1680	IMPEDANCE,60 OHM P
L6562	945 049 1680	IMPEDANCE,60 OHM P
DIODE		
D5531	307 163 0414	DIODE 1SS352-(TPH3)
D5532	307 223 1016	ZENER DIODE 02DZ5.1Y(TPH3
D5533	307 163 0414	DIODE 1SS352-(TPH3)
D5551	307 163 0414	DIODE 1SS352-(TPH3)
D5552	307 223 1016	ZENER DIODE 02DZ5.1Y(TPH3
D5553	307 163 0414	DIODE 1SS352-(TPH3)
D6501	307 163 0414	DIODE 1SS352-(TPH3)
D6502	307 223 0514	ZENER DIODE 02DZ12Y(TPH3)
D6503	307 163 0414	DIODE 1SS352-(TPH3)
D6504	307 163 0414	DIODE 1SS352-(TPH3)
D6505	307 223 0514	ZENER DIODE 02DZ12Y(TPH3)
D6506	307 163 0414	DIODE 1SS352-(TPH3)
D6551	307 163 0414	DIODE 1SS352-(TPH3)
D6552	307 223 1016	ZENER DIODE 02DZ5.1Y(TPH3
D6553	307 163 0414	DIODE 1SS352-(TPH3)
D6554	307 163 0414	DIODE 1SS352-(TPH3)
D6556	307 163 0414	DIODE 1SS352-(TPH3)
A2851	**610 341 5253**	**ASSY,PWB.LED KW7A**
TRANSISTOR		
Q2851	305 134 5928	TR 2SA1037AK-T146-R
	305 147 2218	TR 2SA1037AK-S-T146
	305 173 9618	TR 2SA1235A1E
	305 173 9717	TR 2SA1235A1F
	405 220 3115	TR ISA1235AC1E
	405 220 3016	TR ISA1235AC1F
Q2852	305 014 4512	TR 2SC2412K T146 R
	305 014 4611	TR 2SC2412K T146 S
	305 015 8727	TR 2SC2812-L6-TB
	305 015 8925	TR 2SC2812-L7-TB
	305 163 1615	TR 2SC2812N-L6-TB0
	305 173 9816	TR 2SC3928A1R
	305 173 9915	TR 2SC3928A1S
Q2853	305 014 4512	TR 2SC2412K T146 R
	305 014 4611	TR 2SC2412K T146 S
	305 015 8727	TR 2SC2812-L6-TB
	305 015 8925	TR 2SC2812-L7-TB
	305 163 1615	TR 2SC2812N-L6-TB0
	305 173 9816	TR 2SC3928A1R
	305 173 9915	TR 2SC3928A1S
Q2854	305 014 4512	TR 2SC2412K T146 R
	305 014 4611	TR 2SC2412K T146 S
	305 015 8727	TR 2SC2812-L6-TB
	305 015 8925	TR 2SC2812-L7-TB
	305 163 1615	TR 2SC2812N-L6-TB0
	305 173 9816	TR 2SC3928A1R
	305 173 9915	TR 2SC3928A1S
Q2855	305 014 4512	TR 2SC2412K T146 R
	305 014 4611	TR 2SC2412K T146 S
	305 015 8727	TR 2SC2812-L6-TB
	305 015 8925	TR 2SC2812-L7-TB
	305 163 1615	TR 2SC2812N-L6-TB0
	305 173 9816	TR 2SC3928A1R
	305 173 9915	TR 2SC3928A1S
Q2856	305 014 4512	TR 2SC2412K T146 R
	305 014 4611	TR 2SC2412K T146 S
	305 015 8727	TR 2SC2812-L6-TB
	305 015 8925	TR 2SC2812-L7-TB
	305 163 1615	TR 2SC2812N-L6-TB0
	305 173 9816	TR 2SC3928A1R
	305 173 9915	TR 2SC3928A1S
Q2857	305 014 4512	TR 2SC2412K T146 R
	305 014 4611	TR 2SC2412K T146 S
	305 015 8727	TR 2SC2812-L6-TB
	305 015 8925	TR 2SC2812-L7-TB
	305 163 1615	TR 2SC2812N-L6-TB0
	305 173 9816	TR 2SC3928A1R
	305 173 9915	TR 2SC3928A1S
RESISTOR		
R2851	301 150 6113	MT-GLAZE 2.2K JA 1/10W
R2852	301 255 6513	MT-GLAZE 100 JA 1/10W
R2853	301 150 6113	MT-GLAZE 2.2K JA 1/10W
R2854	301 150 5918	MT-GLAZE 10K JA 1/10W
R2855	301 150 6113	MT-GLAZE 2.2K JA 1/10W
R2856	301 150 5918	MT-GLAZE 10K JA 1/10W
R2857	301 150 6113	MT-GLAZE 2.2K JA 1/10W
R2858	301 150 5918	MT-GLAZE 10K JA 1/10W
R2859	301 150 6113	MT-GLAZE 2.2K JA 1/10W
R2860	301 150 5918	MT-GLAZE 10K JA 1/10W
R2861	301 150 6113	MT-GLAZE 2.2K JA 1/10W
R2862	301 150 5918	MT-GLAZE 10K JA 1/10W
R2863	301 150 6113	MT-GLAZE 2.2K JA 1/10W
R2864	301 150 5918	MT-GLAZE 10K JA 1/10W
R2865	301 255 6513	MT-GLAZE 100 JA 1/10W
R2866	301 256 2910	MT-GLAZE 150 JA 1/10W
R2867	301 152 3219	MT-GLAZE 330 JA 1/10W
R2868	301 152 3219	MT-GLAZE 330 JA 1/10W
R2869	301 152 3219	MT-GLAZE 330 JA 1/10W
R2870	301 152 3219	MT-GLAZE 330 JA 1/10W
R2871	301 152 3219	MT-GLAZE 330 JA 1/10W

Electrical Parts List

Key No.	Part No.	Description		
R2872	301 152 3219	MT-GLAZE	330 JA	1/10W
R2873	301 152 3219	MT-GLAZE	330 JA	1/10W
R2874	301 152 3219	MT-GLAZE	330 JA	1/10W
R2876	301 256 2217	MT-GLAZE	240 JA	1/10W
R2878	301 256 2217	MT-GLAZE	240 JA	1/10W
R2879	301 152 3219	MT-GLAZE	330 JA	1/10W
R2880	301 152 3219	MT-GLAZE	330 JA	1/10W
DIODE				
D2851	307 223 1115	ZENER DIODE 02DZ6.2Y(TPH3		
D2852	307 223 0514	ZENER DIODE 02DZ12Y(TPH3)		
D2853	307 223 1115	ZENER DIODE 02DZ6.2Y(TPH3		
D2854	307 223 1115	ZENER DIODE 02DZ6.2Y(TPH3		
D2855	307 223 1115	ZENER DIODE 02DZ6.2Y(TPH3		
D2856	307 223 1115	ZENER DIODE 02DZ6.2Y(TPH3		
D2857	307 223 1115	ZENER DIODE 02DZ6.2Y(TPH3		
D2858	307 223 1115	ZENER DIODE 02DZ6.2Y(TPH3		
D2859	407 264 6510	LED SMLE12V8W T86		
D2860	407 264 6411	LED SMLE12M8W T86		
D2861	407 264 6510	LED SMLE12V8W T86		
D2862	407 264 6213	LED SMLE12D8W T86		
D2863	407 264 6213	LED SMLE12D8W T86		
D2865	407 259 7515	LED SMLE12BC7TT86		
D2866	407 264 6213	LED SMLE12D8W T86		
A2821	**610 341 5260**	**ASSY,PWB,FRONT R/C KW7A**		
CAPACITOR				
C2821	403 454 6810	CERAMIC	47U M	10V
RESISTOR				
R2821	301 255 6513	MT-GLAZE	100 JA	1/10W
DIODE				
D2821	307 223 0514	ZENER DIODE 02DZ12Y(TPH3)		
D2822	307 225 0215	DIODE RB751S-40		
MISCELLANEOUS				
A2821	945 084 1997	UNIT,REMOCON RECEIVER		
A2801	**610 341 5277**	**ASSY,PWB,REAR R/C KW7A**		
CAPACITOR				
C2801	403 454 6810	CERAMIC	47U M	10V
C2802	303 155 1315	CERAMIC	150P J	50V
RESISTOR				
R2801	301 255 6513	MT-GLAZE	100 JA	1/10W
DIODE				
D2801	307 223 0514	ZENER DIODE 02DZ12Y(TPH3)		
D2802	307 225 0215	DIODE RB751S-40		
MISCELLANEOUS				
A2801	945 084 1997	UNIT,REMOCON RECEIVER		
A601	**610 341 5307**	**ASSY,PWB,POWER KW7A**		
INTEGRATED CIRCUIT				
IC601	309 179 4506	IC STR81145A		
IC632	309 558 4202	IC STR-Z2156A		
IC652	309 308 8603	IC SE005N		
CAPACITOR				
⚠ C602	303 222 1326	CERAMIC	1000P K	1K
⚠ C603	303 222 1326	CERAMIC	1000P K	1K
C604	303 410 7717	ELECT	2.2U M	450V
C605	303 070 0912	CERAMIC	0.1U K	50V
⚠ C606	303 180 4114	MT-POLYEST	0.1U K	630V
C607	303 400 6733	ELECT	100U M	25V
C608	304 085 7504	ELECT	820U M	250V
C609	304 085 7504	ELECT	820U M	250V
C611	303 430 4631	ELECT	2.2U M	200V
C612	303 237 7944	MT-COMPO	0.22U J	50V
C613	303 113 3818	CERAMIC	1000P K	50V
C614	303 342 3313	CERAMIC	0.1U K	25V
C615	303 245 4417	CERAMIC	470P K	2K
C616	303 167 8616	CERAMIC	220P K	2K
C617	304 110 3907	MT-POLYPRO 0.075U H800V		
C618	303 342 3313	CERAMIC	0.1U K	25V
C619	303 342 3313	CERAMIC	0.1U K	25V
C621	303 410 7618	ELECT	220U M	35V
C622	303 430 4710	ELECT	1U M	350V
C623	303 157 6813	CERAMIC	680P K	50V
C625	303 410 6710	ELECT	1000U M	10V
	303 301 2319	ELECT	1000U M	10V
C626	303 410 6710	ELECT	1000U M	10V
	303 301 2319	ELECT	1000U M	10V
C650	303 422 2519	ELECT	2200U M	16V
C651	303 422 2519	ELECT	2200U M	16V
C652	303 342 3313	CERAMIC	0.1U K	25V
C653	303 369 2412	ELECT	2700U M	25V
C654	303 369 2412	ELECT	2700U M	25V
C655	303 342 3313	CERAMIC	0.1U K	25V
C656	303 342 3313	CERAMIC	0.1U K	25V
C657	303 432 7719	ELECT	3300U M	10V
	303 313 6411	ELECT	3300U M	10V
C658	303 358 7312	ELECT	470U M	10V
C659	303 432 7719	ELECT	3300U M	10V
	303 313 6411	ELECT	3300U M	10V
C661	303 432 7719	ELECT	3300U M	10V
	303 313 6411	ELECT	3300U M	10V
C662	303 401 0720	ELECT	4.7U M	50V
RESISTOR				
⚠ R600	301 008 8620	CARBON	220K JA	1/2W
R601	302 078 5704	WIRE WOUND	3.9 JA	7W
R605	301 068 1504	OXIDE-MT	4.7 JA	2W
R606	301 263 0114	MT-GLAZE	100K JA	1W
R607	301 263 0114	MT-GLAZE	100K JA	1W
R608	301 263 0114	MT-GLAZE	100K JA	1W
R609	301 263 0114	MT-GLAZE	100K JA	1W
R611	301 069 4405	OXIDE-MT	68K JA	2W
R612	301 069 4405	OXIDE-MT	68K JA	2W
R614	301 240 7211	MT-GLAZE	33 JA	1/3W
R615	301 162 4015	MT-GLAZE	560 JA	1/10W
R616	301 260 4214	MT-GLAZE	82 JA	1/3W
R617	301 150 6212	MT-GLAZE	1K JA	1/10W
R618	301 150 5918	MT-GLAZE	10K JA	1/10W
R619	402 112 1409	MT-GLAZE	22 JA	1/2W
R621	301 166 0815	MT-GLAZE	330 JA	1/2W
R622	302 080 7802	MT-GLAZE	150 KA	1W
R623	302 080 7901	MT-GLAZE	180 KA	1W
R653	301 162 4015	MT-GLAZE	560 JA	1/10W
R654	301 162 2219	MT-GLAZE	10 JA	1/10W
R655	301 150 6212	MT-GLAZE	1K JA	1/10W
⚠ R656	302 079 7707	FUSIBLE RES	1.0 JH	1/4W
R657	301 256 5614	MT-GLAZE	47 JA	1/10W
⚠ R658	324 006 1503	FUSE	250V	2.5A
VARIABLE RESISTOR				
⚠ VA601	408 065 0100	VD TND20SE471KB0SLAA0		
VR652	945 041 8601	VR,SEMI,470 S		

Electrical Parts List

Key No.	Part No.	Description
TRANSFORMER		
⚠ T621	945 043 3833	TRANS,POWER,PULSE
TE651	945 057 1542	PLUG,PIN 3P(1X3)
COIL		
⚠ L611	945 047 0494	INDUCTOR,4M
DIODE		
D601	307 009 6924	DIODE RM11CV1
D602	307 009 6924	DIODE RM11CV1
D603	307 009 6924	DIODE RM11CV1
D611	307 190 4119	DIODE SFPL-52V
D612	407 259 1800	DIODE D1NK60
D613	307 190 4119	DIODE SFPL-52V
D651	307 202 9801	DIODE FMB-26L
D652	307 164 2209	DIODE FMB-24L
D653	307 190 4119	DIODE SFPL-52V
D655	307 164 2209	DIODE FMB-24L
DB601	307 141 1003	DIODE RBV-408
DS601	307 231 3504	THYRISTOR CR12CM-12A
DZ611	307 223 0514	ZENER DIODE 02DZ12Y(TPH3)
DZ655	307 254 2914	ZENER DIODE 02DZ6.8Y(TPH3
MISCELLANEOUS		
⚠ PC611	407 264 9006	PC TLP732F(D4-BL,F)
⚠ PC612	407 264 9006	PC TLP732F(D4-BL,F)
A6571	**610 341 5291**	**ASSY,PWB,LENS NET KW7A**
A9001	**610 341 5338**	**ASSY,PWB,CGMOTHER KW7A**
TRANSISTOR		
Q9061	305 014 4512	TR 2SC2412K T146 R
	305 014 4611	TR 2SC2412K T146 S
	305 015 8727	TR 2SC2812-L6-TB
	305 015 8925	TR 2SC2812-L7-TB
	305 163 1615	TR 2SC2812N-L6-TB0
	305 173 9816	TR 2SC3928A1R
	305 173 9915	TR 2SC3928A1S
INTEGRATED CIRCUIT		
IC9001	310 474 1305	IC TC74VCX162821FT
IC9002	310 474 1305	IC TC74VCX162821FT
IC9003	310 474 1305	IC TC74VCX162821FT
IC9011	309 462 6012	IC AD8185ARUZ-REEL7
IC9012	309 462 6012	IC AD8185ARUZ-REEL7
IC9030	410 643 5100	IC PQ070XNB1ZPH
IC9086	310 362 6504	IC TC74LCX541FT
IC9087	310 386 1905	IC TC74VCX125FT
IC9088	310 348 7402	IC TC74LCX125FT(EL)
IC9091	309 416 6518	IC BA05FP-E2
IC9092	309 416 6518	IC BA05FP-E2
IC9093	309 416 6518	IC BA05FP-E2
IC9094	309 416 6518	IC BA05FP-E2
IC9097	309 461 7822	IC PQ20WZ11
IC9098	309 461 7822	IC PQ20WZ11
IC9099	309 461 7822	IC PQ20WZ11
IC9101	410 643 5100	IC PQ070XNB1ZPH
IC9128	310 362 6504	IC TC74LCX541FT
IC9131	310 605 1709	IC XC3S50-4TQG144C
IC9132	309 487 5727	IC TC7SZ125FU
IC9133	309 487 5727	IC TC7SZ125FU
IC9134	309 487 5727	IC TC7SZ125FU
IC9135	309 487 5727	IC TC7SZ125FU
IC9136	309 487 5727	IC TC7SZ125FU
IC9137	309 487 5727	IC TC7SZ125FU
IC9138	309 487 5727	IC TC7SZ125FU
IC9162	410 643 5100	IC PQ070XNB1ZPH
IC9163	410 643 5100	IC PQ070XNB1ZPH
IC9301	309 461 7822	IC PQ20WZ11
CAPACITOR		
C9001	303 342 3313	CERAMIC 0.1U K 25V
C9002	303 342 3313	CERAMIC 0.1U K 25V
C9003	303 342 3313	CERAMIC 0.1U K 25V
C9004	303 342 3313	CERAMIC 0.1U K 25V
C9005	303 342 3313	CERAMIC 0.1U K 25V
C9006	303 342 3313	CERAMIC 0.1U K 25V
C9007	303 398 1813	ELECT 220U M 6.3V
C9008	303 342 3313	CERAMIC 0.1U K 25V
C9010	303 358 8319	CERAMIC 1U K 10V
C9011	303 342 3313	CERAMIC 0.1U K 25V
C9012	303 342 3313	CERAMIC 0.1U K 25V
C9013	303 215 2214	CERAMIC 0.01U K 50V
C9014	303 215 2214	CERAMIC 0.01U K 50V
C9015	303 215 2214	CERAMIC 0.01U K 50V
C9016	303 342 3313	CERAMIC 0.1U K 25V
C9017	303 342 3313	CERAMIC 0.1U K 25V
C9018	303 398 3213	ELECT 47U M 10V
C9019	303 215 2214	CERAMIC 0.01U K 50V
C9020	303 358 3215	CERAMIC 10U K 6.3V
	303 368 7319	CERAMIC 10U K 6.3V
C9021	303 215 2214	CERAMIC 0.01U K 50V
C9023	303 215 2214	CERAMIC 0.01U K 50V
C9024	303 398 3213	ELECT 47U M 10V
C9025	303 342 3313	CERAMIC 0.1U K 25V
C9026	303 342 3313	CERAMIC 0.1U K 25V
C9027	303 342 3313	CERAMIC 0.1U K 25V
C9028	303 215 2214	CERAMIC 0.01U K 50V
C9029	303 215 2214	CERAMIC 0.01U K 50V
C9030	303 398 2216	ELECT 470U M 6.3V
C9031	303 215 2214	CERAMIC 0.01U K 50V
C9032	303 342 3313	CERAMIC 0.1U K 25V
C9033	303 398 3213	ELECT 47U M 10V
C9034	303 342 3313	CERAMIC 0.1U K 25V
C9035	303 215 2214	CERAMIC 0.01U K 50V
C9036	303 215 2214	CERAMIC 0.01U K 50V
C9038	303 215 2214	CERAMIC 0.01U K 50V
C9039	303 398 3213	ELECT 47U M 10V
C9040	303 342 3313	CERAMIC 0.1U K 25V
C9069	303 342 3313	CERAMIC 0.1U K 25V
C9071	303 342 3313	CERAMIC 0.1U K 25V
C9072	303 342 3313	CERAMIC 0.1U K 25V
C9073	303 342 3313	CERAMIC 0.1U K 25V
C9074	303 342 3313	CERAMIC 0.1U K 25V
C9075	303 397 6512	ELECT 47U M 16V
C9076	303 397 6512	ELECT 47U M 16V
C9077	303 342 3313	CERAMIC 0.1U K 25V
C9078	303 397 6512	ELECT 47U M 16V
C9081	303 342 3313	CERAMIC 0.1U K 25V
C9086	303 394 1312	ELECT 100U M 6.3V
	303 427 9315	ELECT 100U M 6.3V
	303 387 4917	ELECT 100U M 6.3V
C9087	303 342 3313	CERAMIC 0.1U K 25V
C9088	303 394 1312	ELECT 100U M 6.3V
	303 427 9315	ELECT 100U M 6.3V
	303 387 4917	ELECT 100U M 6.3V
C9089	303 342 3313	CERAMIC 0.1U K 25V
C9090	303 342 3313	CERAMIC 0.1U K 25V
C9091	303 394 9417	ELECT 100U M 10V
C9092	303 342 3313	CERAMIC 0.1U K 25V
C9093	303 394 9417	ELECT 100U M 10V

Electrical Parts List

Key No.	Part No.	Description		
C9094	303 342 3313	CERAMIC	0.1U K	25V
C9095	303 394 9417	ELECT	100U M	10V
C9096	303 342 3313	CERAMIC	0.1U K	25V
C9097	303 394 9417	ELECT	100U M	10V
C9098	303 342 3313	CERAMIC	0.1U K	25V
C9101	303 358 8319	CERAMIC	1U K	10V
C9102	303 358 3215	CERAMIC	10U K	6.3V
	303 368 7319	CERAMIC	10U K	6.3V
C9103	303 358 8319	CERAMIC	1U K	10V
C9104	303 342 3313	CERAMIC	0.1U K	25V
C9105	303 358 3215	CERAMIC	10U K	6.3V
	303 368 7319	CERAMIC	10U K	6.3V
C9108	303 358 3215	CERAMIC	10U K	6.3V
	303 368 7319	CERAMIC	10U K	6.3V
C9111	303 342 3313	CERAMIC	0.1U K	25V
C9123	303 397 6512	ELECT	47U M	16V
C9124	303 397 6512	ELECT	47U M	16V
C9125	303 397 6512	ELECT	47U M	16V
C9126	303 358 3215	CERAMIC	10U K	6.3V
	303 368 7319	CERAMIC	10U K	6.3V
C9131	303 394 1312	ELECT	100U M	6.3V
	303 427 9315	ELECT	100U M	6.3V
	303 387 4917	ELECT	100U M	6.3V
C9132	303 342 3313	CERAMIC	0.1U K	25V
C9133	303 342 3313	CERAMIC	0.1U K	25V
C9134	303 342 3313	CERAMIC	0.1U K	25V
C9135	303 342 3313	CERAMIC	0.1U K	25V
C9136	303 342 3313	CERAMIC	0.1U K	25V
C9137	303 342 3313	CERAMIC	0.1U K	25V
C9138	303 342 3313	CERAMIC	0.1U K	25V
C9139	303 342 3313	CERAMIC	0.1U K	25V
C9141	303 342 3313	CERAMIC	0.1U K	25V
C9142	303 342 3313	CERAMIC	0.1U K	25V
C9143	303 394 1312	ELECT	100U M	6.3V
	303 427 9315	ELECT	100U M	6.3V
	303 387 4917	ELECT	100U M	6.3V
C9144	303 342 3313	CERAMIC	0.1U K	25V
C9145	303 394 1312	ELECT	100U M	6.3V
	303 427 9315	ELECT	100U M	6.3V
	303 387 4917	ELECT	100U M	6.3V
C9146	303 342 3313	CERAMIC	0.1U K	25V
C9147	303 342 3313	CERAMIC	0.1U K	25V
C9148	303 342 3313	CERAMIC	0.1U K	25V
C9151	303 342 3313	CERAMIC	0.1U K	25V
C9152	303 342 3313	CERAMIC	0.1U K	25V
C9153	303 342 3313	CERAMIC	0.1U K	25V
C9154	303 342 3313	CERAMIC	0.1U K	25V
C9155	303 342 3313	CERAMIC	0.1U K	25V
C9156	303 342 3313	CERAMIC	0.1U K	25V
C9157	303 342 3313	CERAMIC	0.1U K	25V
C9166	303 358 8319	CERAMIC	1U K	10V
C9171	303 381 9918	ELECT	470U M	16V
C9172	303 381 9918	ELECT	470U M	16V
C9173	303 381 9918	ELECT	470U M	16V
C9174	303 381 9918	ELECT	470U M	16V
C9301	303 397 6512	ELECT	47U M	16V
C9302	303 342 3313	CERAMIC	0.1U K	25V
C9303	303 397 6512	ELECT	47U M	16V
RESISTOR				
R9001	301 256 5614	MT-GLAZE	47 JA	1/10W
R9002	301 256 5614	MT-GLAZE	47 JA	1/10W
R9003	301 256 5614	MT-GLAZE	47 JA	1/10W
R9004	301 256 5614	MT-GLAZE	47 JA	1/10W
R9005	301 264 6412	MT-GLAZE	220 FA	1/10W
R9006	301 264 4715	MT-GLAZE	1.8K FA	1/10W
R9007	301 264 1813	MT-GLAZE	1K FA	1/10W

Key No.	Part No.	Description		
R9009	301 150 6014	MT-GLAZE	0.000 ZA	1/10W
R9010	301 255 8715	MT-GLAZE	22 JA	1/10W
R9011	301 256 7410	MT-GLAZE	39 JA	1/10W
R9012	301 256 2712	MT-GLAZE	75 JA	1/10W
R9013	301 256 7410	MT-GLAZE	39 JA	1/10W
R9014	301 256 2712	MT-GLAZE	75 JA	1/10W
R9015	301 256 7410	MT-GLAZE	39 JA	1/10W
R9016	301 256 2712	MT-GLAZE	75 JA	1/10W
R9017	301 256 7410	MT-GLAZE	39 JA	1/10W
R9018	301 256 2712	MT-GLAZE	75 JA	1/10W
R9019	301 256 7410	MT-GLAZE	39 JA	1/10W
R9020	301 255 8715	MT-GLAZE	22 JA	1/10W
R9021	301 256 2712	MT-GLAZE	75 JA	1/10W
R9022	301 256 7410	MT-GLAZE	39 JA	1/10W
R9023	301 256 2712	MT-GLAZE	75 JA	1/10W
R9024	301 256 6413	MT-GLAZE	18 JA	1/10W
R9025	301 256 6413	MT-GLAZE	18 JA	1/10W
R9026	301 256 7410	MT-GLAZE	39 JA	1/10W
R9027	301 256 6413	MT-GLAZE	18 JA	1/10W
R9028	301 256 6413	MT-GLAZE	18 JA	1/10W
R9029	301 256 7410	MT-GLAZE	39 JA	1/10W
R9030	301 255 8715	MT-GLAZE	22 JA	1/10W
R9031	301 256 6413	MT-GLAZE	18 JA	1/10W
R9032	301 256 6413	MT-GLAZE	18 JA	1/10W
R9033	301 256 6413	MT-GLAZE	18 JA	1/10W
R9034	301 256 7410	MT-GLAZE	39 JA	1/10W
R9035	301 150 6113	MT-GLAZE	2.2K JA	1/10W
R9037	301 150 6113	MT-GLAZE	2.2K JA	1/10W
R9038	301 162 2219	MT-GLAZE	10 JA	1/10W
R9039	301 255 8715	MT-GLAZE	22 JA	1/10W
R9040	301 255 8715	MT-GLAZE	22 JA	1/10W
R9041	301 256 7410	MT-GLAZE	39 JA	1/10W
R9042	301 256 2712	MT-GLAZE	75 JA	1/10W
R9043	301 256 7410	MT-GLAZE	39 JA	1/10W
R9044	301 256 2712	MT-GLAZE	75 JA	1/10W
R9045	301 256 7410	MT-GLAZE	39 JA	1/10W
R9046	301 256 2712	MT-GLAZE	75 JA	1/10W
R9047	301 256 7410	MT-GLAZE	39 JA	1/10W
R9048	301 256 2712	MT-GLAZE	75 JA	1/10W
R9049	301 256 7410	MT-GLAZE	39 JA	1/10W
R9050	301 255 8715	MT-GLAZE	22 JA	1/10W
R9051	301 256 2712	MT-GLAZE	75 JA	1/10W
R9052	301 256 7410	MT-GLAZE	39 JA	1/10W
R9053	301 256 2712	MT-GLAZE	75 JA	1/10W
R9054	301 256 6413	MT-GLAZE	18 JA	1/10W
R9055	301 256 6413	MT-GLAZE	18 JA	1/10W
R9056	301 256 7410	MT-GLAZE	39 JA	1/10W
R9057	301 256 6413	MT-GLAZE	18 JA	1/10W
R9058	301 256 6413	MT-GLAZE	18 JA	1/10W
R9059	301 256 7410	MT-GLAZE	39 JA	1/10W
R9060	301 150 6014	MT-GLAZE	0.000 ZA	1/10W
R9061	301 256 6413	MT-GLAZE	18 JA	1/10W
R9062	301 256 6413	MT-GLAZE	18 JA	1/10W
R9063	301 256 7410	MT-GLAZE	39 JA	1/10W
R9064	301 150 6113	MT-GLAZE	2.2K JA	1/10W
R9066	301 150 5918	MT-GLAZE	10K JA	1/10W
R9067	301 150 5918	MT-GLAZE	10K JA	1/10W
R9068	301 162 2219	MT-GLAZE	10 JA	1/10W
R9069	301 150 5918	MT-GLAZE	10K JA	1/10W
R9070	301 150 6014	MT-GLAZE	0.000 ZA	1/10W
R9073	301 255 8715	MT-GLAZE	22 JA	1/10W
R9077	301 150 6014	MT-GLAZE	0.000 ZA	1/10W
R9078	301 150 6113	MT-GLAZE	2.2K JA	1/10W
R9079	301 255 8616	MT-GLAZE	910 JA	1/10W
R9080	301 255 8715	MT-GLAZE	22 JA	1/10W
R9081	301 162 3711	MT-GLAZE	4.7K JA	1/10W
R9082	301 162 3711	MT-GLAZE	4.7K JA	1/10W

Electrical Parts List

Key No.	Part No.	Description		
R9083	301 162 3711	MT-GLAZE	4.7K JA	1/10W
R9084	301 162 3711	MT-GLAZE	4.7K JA	1/10W
R9091	301 152 3219	MT-GLAZE	330 JA	1/10W
R9092	301 150 6212	MT-GLAZE	1K JA	1/10W
R9093	301 255 8715	MT-GLAZE	22 JA	1/10W
R9094	301 162 3711	MT-GLAZE	4.7K JA	1/10W
R9095	301 150 6014	MT-GLAZE	0.000 ZA	1/10W
R9096	301 150 6014	MT-GLAZE	0.000 ZA	1/10W
R9097	301 150 6014	MT-GLAZE	0.000 ZA	1/10W
R9098	301 150 6014	MT-GLAZE	0.000 ZA	1/10W
R9099	301 150 6014	MT-GLAZE	0.000 ZA	1/10W
R9101	301 150 5918	MT-GLAZE	10K JA	1/10W
R9102	301 150 5918	MT-GLAZE	10K JA	1/10W
R9103	301 264 1714	MT-GLAZE	10 FA	1/10W
R9104	301 258 2512	MT-GLAZE	100 FA	1/10W
R9105	301 264 1813	MT-GLAZE	1K FA	1/10W
R9106	301 255 8715	MT-GLAZE	22 JA	1/10W
R9107	301 255 6513	MT-GLAZE	100 JA	1/10W
R9108	301 255 8715	MT-GLAZE	22 JA	1/10W
R9109	301 255 8715	MT-GLAZE	22 JA	1/10W
R9111	301 256 4112	MT-GLAZE	56 JA	1/10W
R9112	301 256 4112	MT-GLAZE	56 JA	1/10W
R9113	301 256 4112	MT-GLAZE	56 JA	1/10W
R9114	301 256 4112	MT-GLAZE	56 JA	1/10W
R9115	301 162 3711	MT-GLAZE	4.7K JA	1/10W
R9116	301 162 3711	MT-GLAZE	4.7K JA	1/10W
R9117	301 162 3711	MT-GLAZE	4.7K JA	1/10W
R9118	301 162 3711	MT-GLAZE	4.7K JA	1/10W
R9119	301 150 6014	MT-GLAZE	0.000 ZA	1/10W
R9120	301 150 6212	MT-GLAZE	1K JA	1/10W
R9121	301 150 6014	MT-GLAZE	0.000 ZA	1/10W
R9122	301 150 6014	MT-GLAZE	0.000 ZA	1/10W
R9123	301 255 8715	MT-GLAZE	22 JA	1/10W
R9124	301 255 8715	MT-GLAZE	22 JA	1/10W
R9126	301 150 6014	MT-GLAZE	0.000 ZA	1/10W
R9127	301 150 6014	MT-GLAZE	0.000 ZA	1/10W
R9128	301 150 6014	MT-GLAZE	0.000 ZA	1/10W
R9129	301 150 6014	MT-GLAZE	0.000 ZA	1/10W
R9131	301 256 6413	MT-GLAZE	18 JA	1/10W
R9132	301 150 6014	MT-GLAZE	0.000 ZA	1/10W
R9133	301 150 6014	MT-GLAZE	0.000 ZA	1/10W
R9134	301 255 8715	MT-GLAZE	22 JA	1/10W
R9135	301 255 8715	MT-GLAZE	22 JA	1/10W
R9136	301 150 6014	MT-GLAZE	0.000 ZA	1/10W
R9137	301 150 6014	MT-GLAZE	0.000 ZA	1/10W
R9138	301 150 6014	MT-GLAZE	0.000 ZA	1/10W
R9140	301 150 6212	MT-GLAZE	1K JA	1/10W
R9141	301 162 3117	MT-GLAZE	3.3K JA	1/10W
R9143	301 162 3117	MT-GLAZE	3.3K JA	1/10W
R9145	301 162 3117	MT-GLAZE	3.3K JA	1/10W
R9147	301 256 0718	MT-GLAZE	33 JA	1/10W
R9148	301 162 3711	MT-GLAZE	4.7K JA	1/10W
R9149	301 162 3711	MT-GLAZE	4.7K JA	1/10W
R9150	301 162 3711	MT-GLAZE	4.7K JA	1/10W
R9152	301 162 3711	MT-GLAZE	4.7K JA	1/10W
R9153	301 152 3219	MT-GLAZE	330 JA	1/10W
R9156	301 162 3711	MT-GLAZE	4.7K JA	1/10W
R9157	301 162 3711	MT-GLAZE	4.7K JA	1/10W
R9159	301 150 6014	MT-GLAZE	0.000 ZA	1/10W
R9160	301 150 6014	MT-GLAZE	0.000 ZA	1/10W
R9161	301 150 6014	MT-GLAZE	0.000 ZA	1/10W
R9162	301 150 6113	MT-GLAZE	2.2K JA	1/10W
R9163	301 255 8616	MT-GLAZE	910 JA	1/10W
R9164	301 150 6014	MT-GLAZE	0.000 ZA	1/10W
R9165	301 150 6113	MT-GLAZE	2.2K JA	1/10W
R9166	301 255 8616	MT-GLAZE	910 JA	1/10W
R9167	301 150 6014	MT-GLAZE	0.000 ZA	1/10W
R9173	301 162 3117	MT-GLAZE	3.3K JA	1/10W
R9174	301 162 3711	MT-GLAZE	4.7K JA	1/10W
R9175	301 255 8715	MT-GLAZE	22 JA	1/10W
R9176	301 150 6014	MT-GLAZE	0.000 ZA	1/10W
R9177	301 162 3711	MT-GLAZE	4.7K JA	1/10W
R9179	301 162 3711	MT-GLAZE	4.7K JA	1/10W
R9183	301 150 6014	MT-GLAZE	0.000 ZA	1/10W
R9184	301 150 6014	MT-GLAZE	0.000 ZA	1/10W
R9185	301 150 5918	MT-GLAZE	10K JA	1/10W
R9186	301 150 5918	MT-GLAZE	10K JA	1/10W
R9187	301 150 5918	MT-GLAZE	10K JA	1/10W
R9188	301 150 5918	MT-GLAZE	10K JA	1/10W
R9189	301 264 1813	MT-GLAZE	1K FA	1/10W
R9191	301 264 4715	MT-GLAZE	1.8K FA	1/10W
R9192	301 264 6412	MT-GLAZE	220 FA	1/10W
R9193	301 264 1813	MT-GLAZE	1K FA	1/10W
R9194	301 264 2810	MT-GLAZE	1.2K FA	1/10W
R9195	301 258 2512	MT-GLAZE	100 FA	1/10W
R9196	301 150 6014	MT-GLAZE	0.000 ZA	1/10W
R9198	301 255 6513	MT-GLAZE	100 JA	1/10W
R9199	301 255 6513	MT-GLAZE	100 JA	1/10W
R9201	301 255 6513	MT-GLAZE	100 JA	1/10W
R9202	301 255 6513	MT-GLAZE	100 JA	1/10W
R9203	301 255 6513	MT-GLAZE	100 JA	1/10W
R9204	301 255 6513	MT-GLAZE	100 JA	1/10W
R9205	301 255 6513	MT-GLAZE	100 JA	1/10W
R9206	301 255 6513	MT-GLAZE	100 JA	1/10W
R9207	301 255 6513	MT-GLAZE	100 JA	1/10W
R9208	301 150 6014	MT-GLAZE	0.000 ZA	1/10W
R9209	301 150 6014	MT-GLAZE	0.000 ZA	1/10W
R9210	301 150 6014	MT-GLAZE	0.000 ZA	1/10W
R9211	301 255 6513	MT-GLAZE	100 JA	1/10W
R9212	301 255 6513	MT-GLAZE	100 JA	1/10W
R9213	301 255 6513	MT-GLAZE	100 JA	1/10W
R9214	301 255 6513	MT-GLAZE	100 JA	1/10W
R9215	301 255 6513	MT-GLAZE	100 JA	1/10W
R9216	301 255 6513	MT-GLAZE	100 JA	1/10W
R9217	301 255 6513	MT-GLAZE	100 JA	1/10W
R9218	301 255 6513	MT-GLAZE	100 JA	1/10W
R9219	301 255 6513	MT-GLAZE	100 JA	1/10W
R9220	301 255 6513	MT-GLAZE	100 JA	1/10W
R9221	301 255 6513	MT-GLAZE	100 JA	1/10W
R9222	301 255 6513	MT-GLAZE	100 JA	1/10W
R9223	301 255 6513	MT-GLAZE	100 JA	1/10W
R9224	301 255 6513	MT-GLAZE	100 JA	1/10W
R9225	301 255 6513	MT-GLAZE	100 JA	1/10W
R9226	301 255 6513	MT-GLAZE	100 JA	1/10W
R9227	301 150 6014	MT-GLAZE	0.000 ZA	1/10W
R9228	301 150 6014	MT-GLAZE	0.000 ZA	1/10W
R9229	301 150 6014	MT-GLAZE	0.000 ZA	1/10W
R9232	301 150 6014	MT-GLAZE	0.000 ZA	1/10W
R9233	301 150 6014	MT-GLAZE	0.000 ZA	1/10W
R9234	301 150 6014	MT-GLAZE	0.000 ZA	1/10W
R9235	301 150 6014	MT-GLAZE	0.000 ZA	1/10W
R9236	301 150 6014	MT-GLAZE	0.000 ZA	1/10W
R9237	301 150 6014	MT-GLAZE	0.000 ZA	1/10W
R9238	301 150 6014	MT-GLAZE	0.000 ZA	1/10W
R9239	301 150 6014	MT-GLAZE	0.000 ZA	1/10W
R9240	301 150 6014	MT-GLAZE	0.000 ZA	1/10W
R9241	301 150 6014	MT-GLAZE	0.000 ZA	1/10W
R9301	301 255 8111	MT-GLAZE	5.1K JA	1/10W
R9302	301 255 8111	MT-GLAZE	5.1K JA	1/10W
R9303	301 255 5813	MT-GLAZE	2K JA	1/10W
R9304	301 150 6014	MT-GLAZE	0.000 ZA	1/10W
RB9034	945 029 5790	R-NETWORK 1KX4 1/32W		
	945 028 0703	R-NETWORK 1KX4 1/16W		
RB9035	945 029 5790	R-NETWORK 1KX4 1/32W		

Electrical Parts List

Key No.	Part No.	Description
	945 028 0703	R-NETWORK 1KX4 1/16W
RB9036	945 029 5790	R-NETWORK 1KX4 1/32W
	945 028 0703	R-NETWORK 1KX4 1/16W
RB9037	945 029 5790	R-NETWORK 1KX4 1/32W
	945 028 0703	R-NETWORK 1KX4 1/16W
RB9038	945 034 5051	R-NETWORK 22X4 1/32W
	945 037 0824	R-NETWORK 22X4 1/16W
RB9039	945 034 5051	R-NETWORK 22X4 1/32W
	945 037 0824	R-NETWORK 22X4 1/16W
RB9040	945 034 5051	R-NETWORK 22X4 1/32W
	945 037 0824	R-NETWORK 22X4 1/16W
RB9041	945 034 5051	R-NETWORK 22X4 1/32W
	945 037 0824	R-NETWORK 22X4 1/16W
RB9042	945 034 5051	R-NETWORK 22X4 1/32W
	945 037 0824	R-NETWORK 22X4 1/16W
RB9043	945 034 5051	R-NETWORK 22X4 1/32W
	945 037 0824	R-NETWORK 22X4 1/16W
RB9044	945 034 5051	R-NETWORK 22X4 1/32W
	945 037 0824	R-NETWORK 22X4 1/16W
RB9045	945 034 5051	R-NETWORK 22X4 1/32W
	945 037 0824	R-NETWORK 22X4 1/16W
RB9046	945 034 5051	R-NETWORK 22X4 1/32W
	945 037 0824	R-NETWORK 22X4 1/16W
RB9047	945 034 5051	R-NETWORK 22X4 1/32W
	945 037 0824	R-NETWORK 22X4 1/16W
RB9048	945 034 5051	R-NETWORK 22X4 1/32W
	945 037 0824	R-NETWORK 22X4 1/16W
RB9049	945 034 5051	R-NETWORK 22X4 1/32W
	945 037 0824	R-NETWORK 22X4 1/16W
RB9050	945 034 5051	R-NETWORK 22X4 1/32W
	945 037 0824	R-NETWORK 22X4 1/16W
RB9051	945 034 5051	R-NETWORK 22X4 1/32W
	945 037 0824	R-NETWORK 22X4 1/16W
COIL		
L9101	945 059 2240	INDUCTOR,2.2U M
L9102	945 059 2240	INDUCTOR,2.2U M
L9103	945 059 2240	INDUCTOR,2.2U M
DIODE		
D9171	307 223 0514	ZENER DIODE 02DZ12Y(TPH3)
D9172	307 223 0514	ZENER DIODE 02DZ12Y(TPH3)
D9173	307 223 0514	ZENER DIODE 02DZ12Y(TPH3)
D9174	307 223 0514	ZENER DIODE 02DZ12Y(TPH3)
MISCELLANEOUS		
K90C	945 041 6065	PLUG,I/O 176P
K90E	945 041 6065	PLUG,I/O 176P
K90F	945 041 6065	PLUG,I/O 176P
K90K	945 009 8391	PLUG,ANT 2P
K90L	945 009 8391	PLUG,ANT 2P
K90M	945 009 8391	PLUG,ANT 2P
K91B	645 096 4022	PLUG,ANT 1P
K91G	645 096 4022	PLUG,ANT 1P
K91R	645 096 4022	PLUG,ANT 1P
X9131	945 076 5194	OSC,CRYSTAL 79.991883MHZ

A8811 610 341 5376 ASSY,PWB,SENSOR KW7A

Key No.	Part No.	Description		
CAPACITOR				
C8811	303 342 3313	CERAMIC	0.1U K	25V
C8812	303 391 5511	ELECT	10U M	16V
RESISTOR				
R8812	301 150 6014	MT-GLAZE	0.000 ZA	1/10W
R8813	301 150 5918	MT-GLAZE	10K JA	1/10W
R8815	301 150 5918	MT-GLAZE	10K JA	1/10W
R8817	301 255 6513	MT-GLAZE	100 JA	1/10W
R8818	301 255 6513	MT-GLAZE	100 JA	1/10W

A6581 610 341 5406 ASSY,PWB,FILTER SW KW7A

Key No.	Part No.	Description
MISCELLANEOUS		
SW6581	945 063 5176	SWITCH,PUSH 2P-2TX3

A2691 610 341 5383 ASSY,PWB,F-G NET KW7A

A7761 610 341 5390 ASSY,PWB,RGB FANNET KW7A

Key No.	Part No.	Description		
CAPACITOR				
C7761	303 215 1019	CERAMIC	470P J	50V
C7762	303 342 3313	CERAMIC	0.1U K	25V
C7763	303 215 1019	CERAMIC	470P J	50V
C7764	303 342 3313	CERAMIC	0.1U K	25V
C7765	303 342 3313	CERAMIC	0.1U K	25V
C7768	303 113 3818	CERAMIC	1000P K	50V
RESISTOR				
R7761	301 150 5918	MT-GLAZE	10K JA	1/10W
R7762	301 150 5918	MT-GLAZE	10K JA	1/10W
R7763	301 150 5918	MT-GLAZE	10K JA	1/10W
R7764	301 150 5918	MT-GLAZE	10K JA	1/10W
R7765	301 037 5017	MT-GLAZE	0.000 ZA	1/10W
R7766	301 037 5017	MT-GLAZE	0.000 ZA	1/10W
R7767	301 037 5017	MT-GLAZE	0.000 ZA	1/10W
R7768	301 150 6014	MT-GLAZE	0.000 ZA	1/10W
R7769	301 150 6014	MT-GLAZE	0.000 ZA	1/10W
R7770	301 150 6014	MT-GLAZE	0.000 ZA	1/10W
R7774	301 037 5017	MT-GLAZE	0.000 ZA	1/10W
R7775	301 037 5017	MT-GLAZE	0.000 ZA	1/10W
R7777	301 037 5017	MT-GLAZE	0.000 ZA	1/10W
R7778	301 037 5017	MT-GLAZE	0.000 ZA	1/10W
DIODE				
D7761	307 163 0414	DIODE 1SS352-(TPH3)		
D7762	307 163 0414	DIODE 1SS352-(TPH3)		
D7763	307 163 0414	DIODE 1SS352-(TPH3)		
D7764	307 163 0414	DIODE 1SS352-(TPH3)		

A6591 610 341 5413 ASSY,PWB,HALL SENSOR KW7A

Key No.	Part No.	Description		
INTEGRATED CIRCUIT				
IC6593	309 368 5812	IC TC7SH08FU(TE85L)		
CAPACITOR				
C6591	303 342 3313	CERAMIC	0.1U K	25V
C6592	303 342 3313	CERAMIC	0.1U K	25V
RESISTOR				
R6591	301 150 6014	MT-GLAZE	0.000 ZA	1/10W
R6592	301 150 6014	MT-GLAZE	0.000 ZA	1/10W
R6593	301 150 6014	MT-GLAZE	0.000 ZA	1/10W
R6594	301 150 6014	MT-GLAZE	0.000 ZA	1/10W

A3801 610 348 4860 ASSY,PWB,RS232C KE8A

Key No.	Part No.	Description
INTEGRATED CIRCUIT		
IC3801	309 652 0714	IC HIN202EIBNZ-T

Electrical Parts List

Key No.	Part No.	Description		
IC3804	309 400 9112	IC TC7SET08FU-(TE85L)		
CAPACITOR				
C3851	303 358 8319	CERAMIC	1U K	10V
C3852	303 358 8319	CERAMIC	1U K	10V
C3853	303 358 8319	CERAMIC	1U K	10V
C3854	303 358 8319	CERAMIC	1U K	10V
C3855	303 358 8319	CERAMIC	1U K	10V
C3856	303 391 5313	ELECT	47U M	6.3V
C3857	303 342 3313	CERAMIC	0.1U K	25V
C3861	303 342 3313	CERAMIC	0.1U K	25V
C3867	303 358 8319	CERAMIC	1U K	10V
RESISTOR				
R3851	301 255 6513	MT-GLAZE	100 JA	1/10W
R3852	301 150 6014	MT-GLAZE	0.000 ZA	1/10W
R3855	301 255 6513	MT-GLAZE	100 JA	1/10W
R3856	301 150 5918	MT-GLAZE	10K JA	1/10W
R3857	301 152 3219	MT-GLAZE	330 JA	1/10W
R3863	301 255 6513	MT-GLAZE	100 JA	1/10W
R3865	301 255 6513	MT-GLAZE	100 JA	1/10W
R3866	301 255 8111	MT-GLAZE	5.1K JA	1/10W
R3867	301 150 5918	MT-GLAZE	10K JA	1/10W
R3868	301 150 6014	MT-GLAZE	0.000 ZA	1/10W
R3874	301 255 6513	MT-GLAZE	100 JA	1/10W
R3882	301 150 6014	MT-GLAZE	0.000 ZA	1/10W
R3883	301 150 6014	MT-GLAZE	0.000 ZA	1/10W
R3884	301 255 6513	MT-GLAZE	100 JA	1/10W
R3897	301 255 6513	MT-GLAZE	100 JA	1/10W
COIL				
L3851	645 089 3438	FILTER,EMI 20MHZ		
L3853	645 089 3438	FILTER,EMI 20MHZ		
L3854	645 089 3438	FILTER,EMI 20MHZ		
L3857	945 062 2824	INDUCTOR,3.3U M		
L3858	645 089 3438	FILTER,EMI 20MHZ		
DIODE				
D3866	307 223 1115	ZENER DIODE 02DZ6.2Y(TPH3		
D3867	307 223 1115	ZENER DIODE 02DZ6.2Y(TPH3		
D3868	307 223 1115	ZENER DIODE 02DZ6.2Y(TPH3		
MISCELLANEOUS				
IC3802	407 265 7813	PC TLP781F(D4-GB-TP7)		
K38A	945 027 8779	PLUG,D-SUB 9P		
K38B	945 027 8779	PLUG,D-SUB 9P		
K38C	645 098 8790	SOCKET,USB 4P		
K38D	945 017 1681	JACK,PHONE D3.6		
SC3851	945 076 3503	SURGE-ABSORBER		
SC3853	945 076 3503	SURGE-ABSORBER		
SC3859	945 076 3503	SURGE-ABSORBER		
SC3862	945 076 3503	SURGE-ABSORBER		
SC3874	945 076 3503	SURGE-ABSORBER		
SC3876	945 076 3503	SURGE-ABSORBER		
SC3881	945 076 3503	SURGE-ABSORBER		
SW3801	945 042 8198	SWITCH,PUSH 1P-1TX1		

A7701 610 348 4877 ASSY,PWB,LAMP FANNET KE8A

Key No.	Part No.	Description		
CAPACITOR				
C7701	303 215 1019	CERAMIC	470P J	50V
C7702	303 113 3818	CERAMIC	1000P K	50V
C7703	303 215 1019	CERAMIC	470P J	50V
C7704	303 113 3818	CERAMIC	1000P K	50V
C7705	303 215 1019	CERAMIC	470P J	50V
C7706	303 113 3818	CERAMIC	1000P K	50V
C7707	303 215 1019	CERAMIC	470P J	50V
C7708	303 113 3818	CERAMIC	1000P K	50V
C7709	303 342 3313	CERAMIC	0.1U K	25V
C7710	303 342 3313	CERAMIC	0.1U K	25V
C7711	303 342 3313	CERAMIC	0.1U K	25V
C7712	303 215 1019	CERAMIC	470P J	50V
C7713	303 342 3313	CERAMIC	0.1U K	25V
C7714	303 215 1019	CERAMIC	470P J	50V
C7715	303 113 3818	CERAMIC	1000P K	50V
RESISTOR				
R7701	301 150 5918	MT-GLAZE	10K JA	1/10W
R7705	301 150 5918	MT-GLAZE	10K JA	1/10W
R7706	301 150 5918	MT-GLAZE	10K JA	1/10W
R7707	301 150 5918	MT-GLAZE	10K JA	1/10W
R7708	301 150 5918	MT-GLAZE	10K JA	1/10W
R7711	301 037 5017	MT-GLAZE	0.000 ZA	1/10W
R7712	301 037 5017	MT-GLAZE	0.000 ZA	1/10W
R7714	301 150 6014	MT-GLAZE	0.000 ZA	1/10W
R8802	301 037 5017	MT-GLAZE	0.000 ZA	1/10W
R8807	301 150 6014	MT-GLAZE	0.000 ZA	1/10W
DIODE				
D7701	307 163 0414	DIODE 1SS352-(TPH3)		
D7704	307 163 0414	DIODE 1SS352-(TPH3)		
D7705	307 163 0414	DIODE 1SS352-(TPH3)		
D7707	307 163 0414	DIODE 1SS352-(TPH3)		
D7708	307 163 0414	DIODE 1SS352-(TPH3)		

A6801 610 346 0444 ASSY,PWB,CONTROL KE8A

Key No.	Part No.	Description		
CAPACITOR				
C6801	303 367 0410	CERAMIC	0.1U K	50V
C6802	303 367 0410	CERAMIC	0.1U K	50V
C6803	303 367 0410	CERAMIC	0.1U K	50V
RESISTOR				
R6801	301 162 3018	MT-GLAZE	22K JA	1/10W
R6802	301 256 3610	MT-GLAZE	15K JA	1/10W
R6803	301 162 4114	MT-GLAZE	5.6K JA	1/10W
R6804	301 162 3711	MT-GLAZE	4.7K JA	1/10W
R6806	301 256 5911	MT-GLAZE	2.7K JA	1/10W
R6807	301 162 2813	MT-GLAZE	1.8K JA	1/10W
R6808	301 256 3818	MT-GLAZE	1.5K JA	1/10W
R6809	301 162 3612	MT-GLAZE	470 JA	1/10W
R6812	301 162 3018	MT-GLAZE	22K JA	1/10W
R6813	301 256 3610	MT-GLAZE	15K JA	1/10W
R6814	301 162 4114	MT-GLAZE	5.6K JA	1/10W
R6816	301 162 3711	MT-GLAZE	4.7K JA	1/10W
R6817	301 256 5911	MT-GLAZE	2.7K JA	1/10W
R6818	301 162 2813	MT-GLAZE	1.8K JA	1/10W
R6819	301 256 3818	MT-GLAZE	1.5K JA	1/10W
R6821	301 162 3612	MT-GLAZE	470 JA	1/10W
R6823	301 162 3018	MT-GLAZE	22K JA	1/10W
R6824	301 256 3610	MT-GLAZE	15K JA	1/10W
R6826	301 162 4114	MT-GLAZE	5.6K JA	1/10W
R6827	301 162 3711	MT-GLAZE	4.7K JA	1/10W
R6828	301 256 5911	MT-GLAZE	2.7K JA	1/10W
R6829	301 162 2813	MT-GLAZE	1.8K JA	1/10W
R6831	301 256 3818	MT-GLAZE	1.5K JA	1/10W
R6832	301 162 3612	MT-GLAZE	470 JA	1/10W
DIODE				
D6801	307 223 1115	ZENER DIODE 02DZ6.2Y(TPH3		
D6802	307 223 1115	ZENER DIODE 02DZ6.2Y(TPH3		
D6803	307 223 1115	ZENER DIODE 02DZ6.2Y(TPH3		
D6804	307 223 1115	ZENER DIODE 02DZ6.2Y(TPH3		

Electrical Parts List

Key No.	Part No.	Description
MISCELLANEOUS		
SW6801	945 025 3479	SWITCH,PUSH 1P-2TX1
SW6802	945 025 3479	SWITCH,PUSH 1P-2TX1
SW6803	945 025 3479	SWITCH,PUSH 1P-2TX1
SW6804	945 025 3479	SWITCH,PUSH 1P-2TX1
SW6806	945 025 3479	SWITCH,PUSH 1P-2TX1
SW6807	945 025 3479	SWITCH,PUSH 1P-2TX1
SW6809	945 025 3479	SWITCH,PUSH 1P-2TX1
SW6812	945 025 3479	SWITCH,PUSH 1P-2TX1
SW6814	945 025 3479	SWITCH,PUSH 1P-2TX1
SW6817	945 025 3479	SWITCH,PUSH 1P-2TX1
SW6819	945 025 3479	SWITCH,PUSH 1P-2TX1
SW6821	945 025 3479	SWITCH,PUSH 1P-2TX1
SW6822	945 025 3479	SWITCH,PUSH 1P-2TX1
SW6823	945 025 3479	SWITCH,PUSH 1P-2TX1
A801	**610 347 5745**	**ASSY,PWB,MAIN KE8B**
TRANSISTOR		
Q1451	405 219 1610	TR RTQ020N03-TR
Q1801	305 191 5814	TR 3LN01C-TB-E
Q1802	305 191 5814	TR 3LN01C-TB-E
Q201	305 014 4512	TR 2SC2412K T146 R
	305 014 4611	TR 2SC2412K T146 S
	305 015 8727	TR 2SC2812-L6-TB
	305 015 8925	TR 2SC2812-L7-TB
	305 163 1615	TR 2SC2812N-L6-TB0
	305 173 9816	TR 2SC3928A1R
	305 173 9915	TR 2SC3928A1S
Q211	305 014 4512	TR 2SC2412K T146 R
	305 014 4611	TR 2SC2412K T146 S
	305 015 8727	TR 2SC2812-L6-TB
	305 015 8925	TR 2SC2812-L7-TB
	305 163 1615	TR 2SC2812N-L6-TB0
	305 173 9816	TR 2SC3928A1R
	305 173 9915	TR 2SC3928A1S
Q221	305 014 4512	TR 2SC2412K T146 R
	305 014 4611	TR 2SC2412K T146 S
	305 015 8727	TR 2SC2812-L6-TB
	305 015 8925	TR 2SC2812-L7-TB
	305 163 1615	TR 2SC2812N-L6-TB0
	305 173 9816	TR 2SC3928A1R
	305 173 9915	TR 2SC3928A1S
Q2501	305 158 9213	TR IMZ4-T108
Q2502	305 158 9213	TR IMZ4-T108
Q2531	305 158 9213	TR IMZ4-T108
Q2532	305 158 9213	TR IMZ4-T108
Q2561	305 158 9213	TR IMZ4-T108
Q2562	305 158 9213	TR IMZ4-T108
Q271	305 014 4512	TR 2SC2412K T146 R
	305 014 4611	TR 2SC2412K T146 S
	305 015 8727	TR 2SC2812-L6-TB
	305 015 8925	TR 2SC2812-L7-TB
	305 163 1615	TR 2SC2812N-L6-TB0
	305 173 9816	TR 2SC3928A1R
	305 173 9915	TR 2SC3928A1S
Q4401	305 211 1918	TR RJU002N06
Q4402	305 211 1918	TR RJU002N06
Q4701	305 014 4512	TR 2SC2412K T146 R
	305 014 4611	TR 2SC2412K T146 S
	305 015 8727	TR 2SC2812-L6-TB
	305 015 8925	TR 2SC2812-L7-TB
	305 163 1615	TR 2SC2812N-L6-TB0
	305 173 9816	TR 2SC3928A1R
	305 173 9915	TR 2SC3928A1S
Q4851	305 014 4512	TR 2SC2412K T146 R
	305 014 4611	TR 2SC2412K T146 S
	305 015 8727	TR 2SC2812-L6-TB
	305 015 8925	TR 2SC2812-L7-TB
	305 163 1615	TR 2SC2812N-L6-TB0
	305 173 9816	TR 2SC3928A1R
	305 173 9915	TR 2SC3928A1S
Q4852	305 014 4512	TR 2SC2412K T146 R
	305 014 4611	TR 2SC2412K T146 S
	305 015 8727	TR 2SC2812-L6-TB
	305 015 8925	TR 2SC2812-L7-TB
	305 163 1615	TR 2SC2812N-L6-TB0
	305 173 9816	TR 2SC3928A1R
	305 173 9915	TR 2SC3928A1S
Q4853	305 014 4512	TR 2SC2412K T146 R
	305 014 4611	TR 2SC2412K T146 S
	305 015 8727	TR 2SC2812-L6-TB
	305 015 8925	TR 2SC2812-L7-TB
	305 163 1615	TR 2SC2812N-L6-TB0
	305 173 9816	TR 2SC3928A1R
	305 173 9915	TR 2SC3928A1S
Q4854	305 014 4512	TR 2SC2412K T146 R
	305 014 4611	TR 2SC2412K T146 S
	305 015 8727	TR 2SC2812-L6-TB
	305 015 8925	TR 2SC2812-L7-TB
	305 163 1615	TR 2SC2812N-L6-TB0
	305 173 9816	TR 2SC3928A1R
	305 173 9915	TR 2SC3928A1S
Q4855	305 014 4512	TR 2SC2412K T146 R
	305 014 4611	TR 2SC2412K T146 S
	305 015 8727	TR 2SC2812-L6-TB
	305 015 8925	TR 2SC2812-L7-TB
	305 163 1615	TR 2SC2812N-L6-TB0
	305 173 9816	TR 2SC3928A1R
	305 173 9915	TR 2SC3928A1S
Q4856	305 014 4512	TR 2SC2412K T146 R
	305 014 4611	TR 2SC2412K T146 S
	305 015 8727	TR 2SC2812-L6-TB
	305 015 8925	TR 2SC2812-L7-TB
	305 163 1615	TR 2SC2812N-L6-TB0
	305 173 9816	TR 2SC3928A1R
	305 173 9915	TR 2SC3928A1S
Q4857	305 014 4512	TR 2SC2412K T146 R
	305 014 4611	TR 2SC2412K T146 S
	305 015 8727	TR 2SC2812-L6-TB
	305 015 8925	TR 2SC2812-L7-TB
	305 163 1615	TR 2SC2812N-L6-TB0
	305 173 9816	TR 2SC3928A1R
	305 173 9915	TR 2SC3928A1S
Q4858	305 014 4512	TR 2SC2412K T146 R
	305 014 4611	TR 2SC2412K T146 S
	305 015 8727	TR 2SC2812-L6-TB
	305 015 8925	TR 2SC2812-L7-TB
	305 163 1615	TR 2SC2812N-L6-TB0
	305 173 9816	TR 2SC3928A1R
	305 173 9915	TR 2SC3928A1S
Q4862	305 014 4512	TR 2SC2412K T146 R
	305 014 4611	TR 2SC2412K T146 S
	305 015 8727	TR 2SC2812-L6-TB
	305 015 8925	TR 2SC2812-L7-TB
	305 163 1615	TR 2SC2812N-L6-TB0
	305 173 9816	TR 2SC3928A1R
	305 173 9915	TR 2SC3928A1S
Q4863	305 014 4512	TR 2SC2412K T146 R
	305 014 4611	TR 2SC2412K T146 S
	305 015 8727	TR 2SC2812-L6-TB
	305 015 8925	TR 2SC2812-L7-TB

Electrical Parts List

Key No.	Part No.	Description
	305 163 1615	TR 2SC2812N-L6-TB0
	305 173 9816	TR 2SC3928A1R
	305 173 9915	TR 2SC3928A1S
Q4864	305 014 4512	TR 2SC2412K T146 R
	305 014 4611	TR 2SC2412K T146 S
	305 015 8727	TR 2SC2812-L6-TB
	305 015 8925	TR 2SC2812-L7-TB
	305 163 1615	TR 2SC2812N-L6-TB0
	305 173 9816	TR 2SC3928A1R
	305 173 9915	TR 2SC3928A1S
Q4865	305 014 4512	TR 2SC2412K T146 R
	305 014 4611	TR 2SC2412K T146 S
	305 015 8727	TR 2SC2812-L6-TB
	305 015 8925	TR 2SC2812-L7-TB
	305 163 1615	TR 2SC2812N-L6-TB0
	305 173 9816	TR 2SC3928A1R
	305 173 9915	TR 2SC3928A1S
Q4866	305 014 4512	TR 2SC2412K T146 R
	305 014 4611	TR 2SC2412K T146 S
	305 015 8727	TR 2SC2812-L6-TB
	305 015 8925	TR 2SC2812-L7-TB
	305 163 1615	TR 2SC2812N-L6-TB0
	305 173 9816	TR 2SC3928A1R
	305 173 9915	TR 2SC3928A1S
Q4868	305 014 4512	TR 2SC2412K T146 R
	305 014 4611	TR 2SC2412K T146 S
	305 015 8727	TR 2SC2812-L6-TB
	305 015 8925	TR 2SC2812-L7-TB
	305 163 1615	TR 2SC2812N-L6-TB0
	305 173 9816	TR 2SC3928A1R
	305 173 9915	TR 2SC3928A1S
Q4869	305 014 4512	TR 2SC2412K T146 R
	305 014 4611	TR 2SC2412K T146 S
	305 015 8727	TR 2SC2812-L6-TB
	305 015 8925	TR 2SC2812-L7-TB
	305 163 1615	TR 2SC2812N-L6-TB0
	305 173 9816	TR 2SC3928A1R
	305 173 9915	TR 2SC3928A1S
Q5630	305 156 0222	TR 2SK2376
Q5800	305 014 4512	TR 2SC2412K T146 R
	305 014 4611	TR 2SC2412K T146 S
	305 015 8727	TR 2SC2812-L6-TB
	305 015 8925	TR 2SC2812-L7-TB
	305 163 1615	TR 2SC2812N-L6-TB0
	305 173 9816	TR 2SC3928A1R
	305 173 9915	TR 2SC3928A1S
Q5841	305 014 4512	TR 2SC2412K T146 R
	305 014 4611	TR 2SC2412K T146 S
	305 015 8727	TR 2SC2812-L6-TB
	305 015 8925	TR 2SC2812-L7-TB
	305 163 1615	TR 2SC2812N-L6-TB0
	305 173 9816	TR 2SC3928A1R
	305 173 9915	TR 2SC3928A1S
Q7721	305 209 5713	TR FSS162-TL-E
Q7722	305 139 7719	TR IMZ1A-T108
Q7782	305 014 4512	TR 2SC2412K T146 R
	305 014 4611	TR 2SC2412K T146 S
	305 015 8727	TR 2SC2812-L6-TB
	305 015 8925	TR 2SC2812-L7-TB
	305 163 1615	TR 2SC2812N-L6-TB0
	305 173 9816	TR 2SC3928A1R
	305 173 9915	TR 2SC3928A1S
Q7784	305 014 4512	TR 2SC2412K T146 R
	305 014 4611	TR 2SC2412K T146 S
	305 015 8727	TR 2SC2812-L6-TB
	305 015 8925	TR 2SC2812-L7-TB
	305 163 1615	TR 2SC2812N-L6-TB0
	305 173 9816	TR 2SC3928A1R
	305 173 9915	TR 2SC3928A1S
Q7792	305 014 4512	TR 2SC2412K T146 R
	305 014 4611	TR 2SC2412K T146 S
	305 015 8727	TR 2SC2812-L6-TB
	305 015 8925	TR 2SC2812-L7-TB
	305 163 1615	TR 2SC2812N-L6-TB0
	305 173 9816	TR 2SC3928A1R
	305 173 9915	TR 2SC3928A1S
Q7801	305 014 4512	TR 2SC2412K T146 R
	305 014 4611	TR 2SC2412K T146 S
	305 015 8727	TR 2SC2812-L6-TB
	305 015 8925	TR 2SC2812-L7-TB
	305 163 1615	TR 2SC2812N-L6-TB0
	305 173 9816	TR 2SC3928A1R
	305 173 9915	TR 2SC3928A1S
Q7802	305 014 4512	TR 2SC2412K T146 R
	305 014 4611	TR 2SC2412K T146 S
	305 015 8727	TR 2SC2812-L6-TB
	305 015 8925	TR 2SC2812-L7-TB
	305 163 1615	TR 2SC2812N-L6-TB0
	305 173 9816	TR 2SC3928A1R
	305 173 9915	TR 2SC3928A1S
Q7805	305 014 4512	TR 2SC2412K T146 R
	305 014 4611	TR 2SC2412K T146 S
	305 015 8727	TR 2SC2812-L6-TB
	305 015 8925	TR 2SC2812-L7-TB
	305 163 1615	TR 2SC2812N-L6-TB0
	305 173 9816	TR 2SC3928A1R
	305 173 9915	TR 2SC3928A1S
Q7806	305 014 4512	TR 2SC2412K T146 R
	305 014 4611	TR 2SC2412K T146 S
	305 015 8727	TR 2SC2812-L6-TB
	305 015 8925	TR 2SC2812-L7-TB
	305 163 1615	TR 2SC2812N-L6-TB0
	305 173 9816	TR 2SC3928A1R
	305 173 9915	TR 2SC3928A1S
Q7809	305 014 4512	TR 2SC2412K T146 R
	305 014 4611	TR 2SC2412K T146 S
	305 015 8727	TR 2SC2812-L6-TB
	305 015 8925	TR 2SC2812-L7-TB
	305 163 1615	TR 2SC2812N-L6-TB0
	305 173 9816	TR 2SC3928A1R
	305 173 9915	TR 2SC3928A1S
Q9209	405 221 3510	TR RHP020N06
Q9807	305 014 4512	TR 2SC2412K T146 R
	305 014 4611	TR 2SC2412K T146 S
	305 015 8727	TR 2SC2812-L6-TB
	305 015 8925	TR 2SC2812-L7-TB
	305 163 1615	TR 2SC2812N-L6-TB0
	305 173 9816	TR 2SC3928A1R
	305 173 9915	TR 2SC3928A1S
Q9808	305 014 4512	TR 2SC2412K T146 R
	305 014 4611	TR 2SC2412K T146 S
	305 015 8727	TR 2SC2812-L6-TB
	305 015 8925	TR 2SC2812-L7-TB
	305 163 1615	TR 2SC2812N-L6-TB0
	305 173 9816	TR 2SC3928A1R
	305 173 9915	TR 2SC3928A1S
Q9832	305 217 8515	TR RSQ025P03-TR
INTEGRATED CIRCUIT		
IC1301	410 643 4400	IC EDD2516AETA-5B-E
IC1305	410 693 0506	IC EN29PL064-70TIP-1084
IC1306	309 553 4712	IC PQ070XZ02ZP
IC1307	309 553 4712	IC PQ070XZ02ZP
IC1311	410 643 4400	IC EDD2516AETA-5B-E

Electrical Parts List

Key No.	Part No.	Description
IC1321	410 643 4400	IC EDD2516AETA-5B-E
IC1331	410 643 4400	IC EDD2516AETA-5B-E
IC1401	410 628 4906	IC TC7WBL125AFK(T5L,F
IC1441	409 699 6516	IC TA48S00AF
IC1451	409 699 6516	IC TA48S00AF
IC1841	409 699 6516	IC TA48S00AF
IC1851	310 617 2008	IC EM638325TS-6G
IC1861	410 705 6304	IC EN29PL064-70TIP-1083-A
IC1862	310 595 6500	IC SN74AHC1G32DCKR
IC1881	310 362 6603	IC TC74ACT541FT
IC201	309 461 7317	IC AD8057ARTZ-REEL7
IC211	309 461 7317	IC AD8057ARTZ-REEL7
IC2203	309 330 2511	IC TC7SH04FU-(TE85L)
IC2204	310 474 1404	IC TC74VCX162827FT
IC2205	310 474 1404	IC TC74VCX162827FT
IC221	309 461 7317	IC AD8057ARTZ-REEL7
IC2251	409 699 6516	IC TA48S00AF
IC2252	409 699 6516	IC TA48S00AF
IC2291	309 416 6518	IC BA05FP-E2
IC301	309 654 8114	IC PW388B-10L
IC302	310 538 4907	IC 24LC64T-I/SNG
IC303	309 368 5812	IC TC7SH08FU(TE85L)
IC3281	309 558 9415	IC LP2995MX
IC401	409 700 0212	IC CXD3548GB
IC4731	309 394 9310	IC TC7SH14FU(TE85L)
IC4761	309 394 9310	IC TC7SH14FU(TE85L)
IC4861	309 416 6518	IC BA05FP-E2
IC5201	410 631 4504	IC EP2C5F256C8N
IC5241	409 699 6615	IC BD7820FP
IC5242	409 699 6615	IC BD7820FP
IC5501	409 684 3919	IC NJM2671E2(TE1)
IC5502	309 461 7822	IC PQ20WZ11
IC5651	309 461 7822	IC PQ20WZ11
IC5661	409 699 6615	IC BD7820FP
IC5662	409 701 2918	IC R1173H001B
IC5671	409 699 6615	IC BD7820FP
IC5672	409 685 9415	IC MP2307DN
IC5681	409 701 2918	IC R1173H001B
IC5682	409 701 2918	IC R1173H001B
IC5721	309 368 5812	IC TC7SH08FU(TE85L)
IC5781	409 700 5415	IC AD8515AKSZ-REEL7
IC5801	410 631 4504	IC EP2C5F256C8N
IC5802	309 487 5727	IC TC7SZ125FU
IC5803	309 487 5727	IC TC7SZ125FU
IC5862	309 487 5727	IC TC7SZ125FU
IC591	309 461 7822	IC PQ20WZ11
IC7721	309 531 6229	IC FA7701V-TE1
IC7801	309 458 3414	IC M62393FP
IC7821	309 461 7822	IC PQ20WZ11
IC7841	309 461 7822	IC PQ20WZ11
IC801	310 461 3503	IC HD6417727F160CV
IC802	410 631 6805	IC S-24CS64A0I-J8T1G
IC803	310 610 4306	IC XC61CC3002MR
IC804	309 522 7515	IC TC7SA08FU
IC807	309 368 5812	IC TC7SH08FU(TE85L)
IC808	309 487 5727	IC TC7SZ125FU
IC8201	310 474 1404	IC TC74VCX162827FT
IC8202	310 474 1404	IC TC74VCX162827FT
IC8203	310 474 1404	IC TC74VCX162827FT
IC8251	310 386 1905	IC TC74VCX125FT
IC8881	309 246 9710	IC LA6358NM-TE-L-E
IC9801	309 330 2511	IC TC7SH04FU-(TE85L)
IC9802	309 301 5510	IC TC7S08FU(TE85L)
IC9803	309 301 5510	IC TC7S08FU(TE85L)
IC9804	310 474 1503	IC HD74LV1G126A
IC9805	310 484 0305	IC SN75240PWR
IC9806	410 694 8006	IC A3V64S40ETP-G6
IC9807	309 400 9112	IC TC7SET08FU-(TE85L)
IC9808	309 368 5812	IC TC7SH08FU(TE85L)
IC9809	309 368 5812	IC TC7SH08FU(TE85L)
IC9827	309 431 4424	IC M62334FP-DF5Q
IC9828	309 400 7118	IC TC7W53FU-(TE12L)
IC9829	309 400 7118	IC TC7W53FU-(TE12L)
IC9830	409 692 1310	IC BA3472F-E2
IC9831	309 506 8910	IC FA7700V-TE1

CAPACITOR

C1301	303 358 3215	CERAMIC	10U K	6.3V
	303 368 7319	CERAMIC	10U K	6.3V
C1302	303 438 0219	CERAMIC	0.1U K	16V
	303 409 3426	CERAMIC	0.1U K	16V
C1303	303 438 0219	CERAMIC	0.1U K	16V
	303 409 3426	CERAMIC	0.1U K	16V
C1304	303 438 0219	CERAMIC	0.1U K	16V
	303 409 3426	CERAMIC	0.1U K	16V
C1305	303 438 0219	CERAMIC	0.1U K	16V
	303 409 3426	CERAMIC	0.1U K	16V
C1306	303 438 0219	CERAMIC	0.1U K	16V
	303 409 3426	CERAMIC	0.1U K	16V
C1307	303 438 0219	CERAMIC	0.1U K	16V
	303 409 3426	CERAMIC	0.1U K	16V
C1308	303 438 0219	CERAMIC	0.1U K	16V
	303 409 3426	CERAMIC	0.1U K	16V
C1309	303 438 0219	CERAMIC	0.1U K	16V
	303 409 3426	CERAMIC	0.1U K	16V
C1311	303 358 3215	CERAMIC	10U K	6.3V
	303 368 7319	CERAMIC	10U K	6.3V
C1312	303 438 0219	CERAMIC	0.1U K	16V
	303 409 3426	CERAMIC	0.1U K	16V
C1313	303 438 0219	CERAMIC	0.1U K	16V
	303 409 3426	CERAMIC	0.1U K	16V
C1314	303 438 0219	CERAMIC	0.1U K	16V
	303 409 3426	CERAMIC	0.1U K	16V
C1315	303 438 0219	CERAMIC	0.1U K	16V
	303 409 3426	CERAMIC	0.1U K	16V
C1316	303 438 0219	CERAMIC	0.1U K	16V
	303 409 3426	CERAMIC	0.1U K	16V
C1317	303 438 0219	CERAMIC	0.1U K	16V
	303 409 3426	CERAMIC	0.1U K	16V
C1318	303 438 0219	CERAMIC	0.1U K	16V
	303 409 3426	CERAMIC	0.1U K	16V
C1319	303 438 0219	CERAMIC	0.1U K	16V
	303 409 3426	CERAMIC	0.1U K	16V
C1321	303 358 3215	CERAMIC	10U K	6.3V
	303 368 7319	CERAMIC	10U K	6.3V
C1322	303 438 0219	CERAMIC	0.1U K	16V
	303 409 3426	CERAMIC	0.1U K	16V
C1323	303 438 0219	CERAMIC	0.1U K	16V
	303 409 3426	CERAMIC	0.1U K	16V
C1324	303 438 0219	CERAMIC	0.1U K	16V
	303 409 3426	CERAMIC	0.1U K	16V
C1325	303 438 0219	CERAMIC	0.1U K	16V
	303 409 3426	CERAMIC	0.1U K	16V
C1326	303 438 0219	CERAMIC	0.1U K	16V
	303 409 3426	CERAMIC	0.1U K	16V
C1327	303 438 0219	CERAMIC	0.1U K	16V
	303 409 3426	CERAMIC	0.1U K	16V
C1328	303 438 0219	CERAMIC	0.1U K	16V
	303 409 3426	CERAMIC	0.1U K	16V
C1329	303 438 0219	CERAMIC	0.1U K	16V
	303 409 3426	CERAMIC	0.1U K	16V
C1331	303 358 3215	CERAMIC	10U K	6.3V
	303 368 7319	CERAMIC	10U K	6.3V
C1332	303 438 0219	CERAMIC	0.1U K	16V

Electrical Parts List

Key No.	Part No.	Description		
	303 409 3426	CERAMIC	0.1U K	16V
C1333	303 438 0219	CERAMIC	0.1U K	16V
	303 409 3426	CERAMIC	0.1U K	16V
C1334	303 438 0219	CERAMIC	0.1U K	16V
	303 409 3426	CERAMIC	0.1U K	16V
C1335	303 438 0219	CERAMIC	0.1U K	16V
	303 409 3426	CERAMIC	0.1U K	16V
C1336	303 438 0219	CERAMIC	0.1U K	16V
	303 409 3426	CERAMIC	0.1U K	16V
C1337	303 438 0219	CERAMIC	0.1U K	16V
	303 409 3426	CERAMIC	0.1U K	16V
C1338	303 438 0219	CERAMIC	0.1U K	16V
	303 409 3426	CERAMIC	0.1U K	16V
C1339	303 438 0219	CERAMIC	0.1U K	16V
	303 409 3426	CERAMIC	0.1U K	16V
C1341	303 438 0219	CERAMIC	0.1U K	16V
	303 409 3426	CERAMIC	0.1U K	16V
C1342	303 438 0219	CERAMIC	0.1U K	16V
	303 409 3426	CERAMIC	0.1U K	16V
C1343	303 438 0219	CERAMIC	0.1U K	16V
	303 409 3426	CERAMIC	0.1U K	16V
C1344	303 438 0219	CERAMIC	0.1U K	16V
	303 409 3426	CERAMIC	0.1U K	16V
C1345	303 438 0219	CERAMIC	0.1U K	16V
	303 409 3426	CERAMIC	0.1U K	16V
C1346	303 438 0219	CERAMIC	0.1U K	16V
	303 409 3426	CERAMIC	0.1U K	16V
C1349	303 358 3215	CERAMIC	10U K	6.3V
	303 368 7319	CERAMIC	10U K	6.3V
C1351	303 438 0219	CERAMIC	0.1U K	16V
	303 409 3426	CERAMIC	0.1U K	16V
C1352	403 455 1012	CERAMIC	1U K	10V
	303 433 1112	CERAMIC	1U K	10V
C1353	303 394 1312	ELECT	100U M	6.3V
	303 427 9315	ELECT	100U M	6.3V
	303 387 4917	ELECT	100U M	6.3V
C1355	403 455 1012	CERAMIC	1U K	10V
	303 433 1112	CERAMIC	1U K	10V
C1356	303 394 1312	ELECT	100U M	6.3V
	303 427 9315	ELECT	100U M	6.3V
	303 387 4917	ELECT	100U M	6.3V
C1359	403 455 1012	CERAMIC	1U K	10V
	303 433 1112	CERAMIC	1U K	10V
C1370	403 455 1012	CERAMIC	1U K	10V
	303 433 1112	CERAMIC	1U K	10V
C1401	403 455 1012	CERAMIC	1U K	10V
	303 433 1112	CERAMIC	1U K	10V
C1412	403 455 1012	CERAMIC	1U K	10V
	303 433 1112	CERAMIC	1U K	10V
C1413	403 455 1012	CERAMIC	1U K	10V
	303 433 1112	CERAMIC	1U K	10V
C1441	303 358 3215	CERAMIC	10U K	6.3V
	303 368 7319	CERAMIC	10U K	6.3V
C1442	403 455 1012	CERAMIC	1U K	10V
	303 433 1112	CERAMIC	1U K	10V
C1452	403 455 1012	CERAMIC	1U K	10V
	303 433 1112	CERAMIC	1U K	10V
C1453	303 438 0219	CERAMIC	0.1U K	16V
	303 409 3426	CERAMIC	0.1U K	16V
C1454	303 358 3215	CERAMIC	10U K	6.3V
	303 368 7319	CERAMIC	10U K	6.3V
C1458	303 438 0219	CERAMIC	0.1U K	16V
	303 409 3426	CERAMIC	0.1U K	16V
C1463	303 438 0219	CERAMIC	0.1U K	16V
	303 409 3426	CERAMIC	0.1U K	16V
C1501	303 398 3312	ELECT	47U M	10V
	303 387 6119	ELECT	47U M	10V

Key No.	Part No.	Description		
C1502	403 455 1012	CERAMIC	1U K	10V
	303 433 1112	CERAMIC	1U K	10V
C1503	303 396 9613	CERAMIC	1U K	25V
C1504	303 396 9613	CERAMIC	1U K	25V
C1505	403 455 1012	CERAMIC	1U K	10V
	303 433 1112	CERAMIC	1U K	10V
C1506	303 397 6611	ELECT	10U M	25V
	303 387 6812	ELECT	10U M	25V
C1507	303 396 9613	CERAMIC	1U K	25V
C1508	303 396 9613	CERAMIC	1U K	25V
C1509	303 396 9613	CERAMIC	1U K	25V
C1511	303 396 9613	CERAMIC	1U K	25V
C1512	303 282 5118	CERAMIC	470P K	50V
C1513	303 396 9613	CERAMIC	1U K	25V
C1514	303 397 6611	ELECT	10U M	25V
	303 387 6812	ELECT	10U M	25V
C1516	303 396 9613	CERAMIC	1U K	25V
C1517	303 396 9613	CERAMIC	1U K	25V
C1518	403 455 1012	CERAMIC	1U K	10V
	303 433 1112	CERAMIC	1U K	10V
C1521	303 396 9613	CERAMIC	1U K	25V
C1522	303 397 6611	ELECT	10U M	25V
	303 387 6812	ELECT	10U M	25V
C1531	303 398 3312	ELECT	47U M	10V
	303 387 6119	ELECT	47U M	10V
C1532	403 455 1012	CERAMIC	1U K	10V
	303 433 1112	CERAMIC	1U K	10V
C1533	303 396 9613	CERAMIC	1U K	25V
C1534	303 396 9613	CERAMIC	1U K	25V
C1535	403 455 1012	CERAMIC	1U K	10V
	303 433 1112	CERAMIC	1U K	10V
C1536	303 397 6611	ELECT	10U M	25V
	303 387 6812	ELECT	10U M	25V
C1537	303 396 9613	CERAMIC	1U K	25V
C1538	303 396 9613	CERAMIC	1U K	25V
C1539	303 396 9613	CERAMIC	1U K	25V
C1541	303 396 9613	CERAMIC	1U K	25V
C1542	303 282 5118	CERAMIC	470P K	50V
C1543	303 396 9613	CERAMIC	1U K	25V
C1544	303 397 6611	ELECT	10U M	25V
	303 387 6812	ELECT	10U M	25V
C1546	303 396 9613	CERAMIC	1U K	25V
C1547	303 396 9613	CERAMIC	1U K	25V
C1548	403 455 1012	CERAMIC	1U K	10V
	303 433 1112	CERAMIC	1U K	10V
C1551	303 396 9613	CERAMIC	1U K	25V
C1552	303 397 6611	ELECT	10U M	25V
	303 387 6812	ELECT	10U M	25V
C1561	303 398 3312	ELECT	47U M	10V
	303 387 6119	ELECT	47U M	10V
C1562	403 455 1012	CERAMIC	1U K	10V
	303 433 1112	CERAMIC	1U K	10V
C1563	303 396 9613	CERAMIC	1U K	25V
C1564	303 396 9613	CERAMIC	1U K	25V
C1565	403 455 1012	CERAMIC	1U K	10V
	303 433 1112	CERAMIC	1U K	10V
C1566	303 397 6611	ELECT	10U M	25V
	303 387 6812	ELECT	10U M	25V
C1567	303 396 9613	CERAMIC	1U K	25V
C1568	303 396 9613	CERAMIC	1U K	25V
C1569	303 396 9613	CERAMIC	1U K	25V
C1571	303 396 9613	CERAMIC	1U K	25V
C1572	303 282 5118	CERAMIC	470P K	50V
C1573	303 396 9613	CERAMIC	1U K	25V
C1574	303 397 6611	ELECT	10U M	25V
	303 387 6812	ELECT	10U M	25V
C1576	303 396 9613	CERAMIC	1U K	25V

Electrical Parts List

Key No.	Part No.	Description		
C1577	303 396 9613	CERAMIC	1U K	25V
C1578	403 455 1012	CERAMIC	1U K	10V
	303 433 1112	CERAMIC	1U K	10V
C1581	303 396 9613	CERAMIC	1U K	25V
C1582	303 397 6611	ELECT	10U M	25V
	303 387 6812	ELECT	10U M	25V
C1583	403 455 1012	CERAMIC	1U K	10V
	303 433 1112	CERAMIC	1U K	10V
C1584	403 455 1012	CERAMIC	1U K	10V
	303 433 1112	CERAMIC	1U K	10V
C1585	403 455 1012	CERAMIC	1U K	10V
	303 433 1112	CERAMIC	1U K	10V
C1841	403 455 1012	CERAMIC	1U K	10V
	303 433 1112	CERAMIC	1U K	10V
C1842	303 358 3215	CERAMIC	10U K	6.3V
	303 368 7319	CERAMIC	10U K	6.3V
C1843	303 394 1312	ELECT	100U M	6.3V
	303 427 9315	ELECT	100U M	6.3V
	303 387 4917	ELECT	100U M	6.3V
C1845	303 276 1317	CERAMIC	1000P K	50V
C1846	303 376 6212	CERAMIC	0.22U K	10V
C1851	303 358 3215	CERAMIC	10U K	6.3V
	303 368 7319	CERAMIC	10U K	6.3V
C1852	303 438 0219	CERAMIC	0.1U K	16V
	303 409 3426	CERAMIC	0.1U K	16V
C1853	303 438 0219	CERAMIC	0.1U K	16V
	303 409 3426	CERAMIC	0.1U K	16V
C1854	303 438 0219	CERAMIC	0.1U K	16V
	303 409 3426	CERAMIC	0.1U K	16V
C1855	303 438 0219	CERAMIC	0.1U K	16V
	303 409 3426	CERAMIC	0.1U K	16V
C1856	303 438 0219	CERAMIC	0.1U K	16V
	303 409 3426	CERAMIC	0.1U K	16V
C1857	303 438 0219	CERAMIC	0.1U K	16V
	303 409 3426	CERAMIC	0.1U K	16V
C1858	303 438 0219	CERAMIC	0.1U K	16V
	303 409 3426	CERAMIC	0.1U K	16V
C1859	303 438 0219	CERAMIC	0.1U K	16V
	303 409 3426	CERAMIC	0.1U K	16V
C1861	303 358 3215	CERAMIC	10U K	6.3V
	303 368 7319	CERAMIC	10U K	6.3V
C1862	303 438 0219	CERAMIC	0.1U K	16V
	303 409 3426	CERAMIC	0.1U K	16V
C1863	303 438 0219	CERAMIC	0.1U K	16V
	303 409 3426	CERAMIC	0.1U K	16V
C1881	303 276 1317	CERAMIC	1000P K	50V
C1882	403 455 1012	CERAMIC	1U K	10V
	303 433 1112	CERAMIC	1U K	10V
C1883	303 358 3215	CERAMIC	10U K	6.3V
	303 368 7319	CERAMIC	10U K	6.3V
C202	303 438 0219	CERAMIC	0.1U K	16V
	303 409 3426	CERAMIC	0.1U K	16V
C205	303 279 6210	CERAMIC	10P J	50V
C206	303 438 0219	CERAMIC	0.1U K	16V
	303 409 3426	CERAMIC	0.1U K	16V
C209	303 305 4715	CERAMIC	330P J	50V
C211	303 279 6210	CERAMIC	10P J	50V
C214	303 445 0318	CERAMIC	8P G	50V
C215	303 445 0318	CERAMIC	8P G	50V
C216	303 445 0318	CERAMIC	8P G	50V
C219	303 305 4715	CERAMIC	330P J	50V
C2201	303 438 0219	CERAMIC	0.1U K	16V
	303 409 3426	CERAMIC	0.1U K	16V
C2202	303 369 0527	CERAMIC	0.01U K	25V
C2203	303 438 0219	CERAMIC	0.1U K	16V
	303 409 3426	CERAMIC	0.1U K	16V
C2204	303 438 0219	CERAMIC	0.1U K	16V
	303 409 3426	CERAMIC	0.1U K	16V
C2205	303 438 0219	CERAMIC	0.1U K	16V
	303 409 3426	CERAMIC	0.1U K	16V
C2206	303 369 0527	CERAMIC	0.01U K	25V
C2207	303 438 0219	CERAMIC	0.1U K	16V
	303 409 3426	CERAMIC	0.1U K	16V
C2208	303 369 0527	CERAMIC	0.01U K	25V
C2209	303 438 0219	CERAMIC	0.1U K	16V
	303 409 3426	CERAMIC	0.1U K	16V
C221	303 279 6210	CERAMIC	10P J	50V
C2211	303 369 0527	CERAMIC	0.01U K	25V
C2212	303 438 0219	CERAMIC	0.1U K	16V
	303 409 3426	CERAMIC	0.1U K	16V
C2213	303 438 0219	CERAMIC	0.1U K	16V
	303 409 3426	CERAMIC	0.1U K	16V
C2214	303 369 0527	CERAMIC	0.01U K	25V
C2215	303 438 0219	CERAMIC	0.1U K	16V
	303 409 3426	CERAMIC	0.1U K	16V
C2216	303 438 0219	CERAMIC	0.1U K	16V
	303 409 3426	CERAMIC	0.1U K	16V
C2217	303 369 0527	CERAMIC	0.01U K	25V
C2218	303 438 0219	CERAMIC	0.1U K	16V
	303 409 3426	CERAMIC	0.1U K	16V
C2219	303 369 0527	CERAMIC	0.01U K	25V
C2221	303 438 0219	CERAMIC	0.1U K	16V
	303 409 3426	CERAMIC	0.1U K	16V
C2222	303 438 0219	CERAMIC	0.1U K	16V
	303 409 3426	CERAMIC	0.1U K	16V
C2223	303 369 0527	CERAMIC	0.01U K	25V
C2224	303 438 0219	CERAMIC	0.1U K	16V
	303 409 3426	CERAMIC	0.1U K	16V
C2225	303 369 0527	CERAMIC	0.01U K	25V
C2226	303 369 0527	CERAMIC	0.01U K	25V
C2227	303 438 0219	CERAMIC	0.1U K	16V
	303 409 3426	CERAMIC	0.1U K	16V
C2228	303 369 0527	CERAMIC	0.01U K	25V
C2229	303 145 9918	CERAMIC	22P J	50V
C2231	303 145 9918	CERAMIC	22P J	50V
C2232	303 438 0219	CERAMIC	0.1U K	16V
	303 409 3426	CERAMIC	0.1U K	16V
C2233	303 369 0527	CERAMIC	0.01U K	25V
C2234	303 369 0527	CERAMIC	0.01U K	25V
C2235	303 369 0527	CERAMIC	0.01U K	25V
C2236	303 369 0527	CERAMIC	0.01U K	25V
C2237	303 369 0527	CERAMIC	0.01U K	25V
C2238	303 369 0527	CERAMIC	0.01U K	25V
C2239	303 369 0527	CERAMIC	0.01U K	25V
C2241	303 369 0527	CERAMIC	0.01U K	25V
C2242	303 369 0527	CERAMIC	0.01U K	25V
C2243	303 369 0527	CERAMIC	0.01U K	25V
C2244	303 438 0219	CERAMIC	0.1U K	16V
	303 409 3426	CERAMIC	0.1U K	16V
C2245	303 438 0219	CERAMIC	0.1U K	16V
	303 409 3426	CERAMIC	0.1U K	16V
C2246	303 438 0219	CERAMIC	0.1U K	16V
	303 409 3426	CERAMIC	0.1U K	16V
C2247	303 438 0219	CERAMIC	0.1U K	16V
	303 409 3426	CERAMIC	0.1U K	16V
C2248	303 398 2216	ELECT	470U M	6.3V
C2251	403 455 1012	CERAMIC	1U K	10V
	303 433 1112	CERAMIC	1U K	10V
C2252	303 358 3215	CERAMIC	10U K	6.3V
	303 368 7319	CERAMIC	10U K	6.3V
C2254	303 438 0219	CERAMIC	0.1U K	16V
	303 409 3426	CERAMIC	0.1U K	16V
C2255	303 394 1312	ELECT	100U M	6.3V
	303 427 9315	ELECT	100U M	6.3V

Electrical Parts List

Key No.	Part No.	Description		
	303 387 4917	ELECT	100U M	6.3V
C2256	303 438 0219	CERAMIC	0.1U K	16V
	303 409 3426	CERAMIC	0.1U K	16V
C2257	303 394 1312	ELECT	100U M	6.3V
	303 427 9315	ELECT	100U M	6.3V
	303 387 4917	ELECT	100U M	6.3V
C2258	403 455 1012	CERAMIC	1U K	10V
	303 433 1112	CERAMIC	1U K	10V
C2259	303 358 3215	CERAMIC	10U K	6.3V
	303 368 7319	CERAMIC	10U K	6.3V
C2262	303 438 0219	CERAMIC	0.1U K	16V
	303 409 3426	CERAMIC	0.1U K	16V
C2263	303 394 1312	ELECT	100U M	6.3V
	303 427 9315	ELECT	100U M	6.3V
	303 387 4917	ELECT	100U M	6.3V
C2264	303 438 0219	CERAMIC	0.1U K	16V
	303 409 3426	CERAMIC	0.1U K	16V
C2265	303 394 1312	ELECT	100U M	6.3V
	303 427 9315	ELECT	100U M	6.3V
	303 387 4917	ELECT	100U M	6.3V
C2266	303 438 0219	CERAMIC	0.1U K	16V
	303 409 3426	CERAMIC	0.1U K	16V
C2267	303 438 0219	CERAMIC	0.1U K	16V
	303 409 3426	CERAMIC	0.1U K	16V
C2268	303 438 0219	CERAMIC	0.1U K	16V
	303 409 3426	CERAMIC	0.1U K	16V
C2269	303 438 0219	CERAMIC	0.1U K	16V
	303 409 3426	CERAMIC	0.1U K	16V
C229	303 305 4715	CERAMIC	330P J	50V
C2291	303 391 5115	ELECT	100U M	16V
	303 427 8417	ELECT	100U M	16V
C2292	303 438 0219	CERAMIC	0.1U K	16V
	303 409 3426	CERAMIC	0.1U K	16V
C2293	303 398 3312	ELECT	47U M	10V
	303 387 6119	ELECT	47U M	10V
C233	303 391 5115	ELECT	100U M	16V
	303 427 8417	ELECT	100U M	16V
C235	303 391 5115	ELECT	100U M	16V
	303 427 8417	ELECT	100U M	16V
C2501	303 397 6611	ELECT	10U M	25V
	303 387 6812	ELECT	10U M	25V
C2502	303 367 0410	CERAMIC	0.1U K	50V
C2521	303 367 0410	CERAMIC	0.1U K	50V
C2522	303 396 9613	CERAMIC	1U K	25V
C2523	303 396 9613	CERAMIC	1U K	25V
C2524	303 396 9613	CERAMIC	1U K	25V
C2526	303 398 5415	ELECT	47U M	25V
	303 387 7314	ELECT	47U M	25V
C2531	303 397 6611	ELECT	10U M	25V
	303 387 6812	ELECT	10U M	25V
C2532	303 367 0410	CERAMIC	0.1U K	50V
C2541	303 438 0219	CERAMIC	0.1U K	16V
	303 409 3426	CERAMIC	0.1U K	16V
C2561	303 397 6611	ELECT	10U M	25V
	303 387 6812	ELECT	10U M	25V
C2562	303 367 0410	CERAMIC	0.1U K	50V
C2581	303 367 0410	CERAMIC	0.1U K	50V
C2582	303 376 3112	ELECT	100U M	25V
	303 374 7815	ELECT	100UM	25V
	303 444 0111	ELECT	100U M	25V
C2583	303 367 0410	CERAMIC	0.1U K	50V
C2584	303 376 3112	ELECT	100U M	25V
	303 374 7815	ELECT	100UM	25V
	303 444 0111	ELECT	100U M	25V
C2586	303 367 0410	CERAMIC	0.1U K	50V
C2587	303 396 9613	CERAMIC	1U K	25V
C2588	303 396 9613	CERAMIC	1U K	25V

Key No.	Part No.	Description		
C2589	303 396 9613	CERAMIC	1U K	25V
C2591	303 398 5415	ELECT	47U M	25V
	303 387 7314	ELECT	47U M	25V
C2593	303 396 9613	CERAMIC	1U K	25V
C2594	303 367 0410	CERAMIC	0.1U K	50V
C2596	303 396 9613	CERAMIC	1U K	25V
C2597	303 396 9613	CERAMIC	1U K	25V
C2598	303 398 5415	ELECT	47U M	25V
	303 387 7314	ELECT	47U M	25V
C301	303 358 3215	CERAMIC	10U K	6.3V
	303 368 7319	CERAMIC	10U K	6.3V
C302	303 438 0219	CERAMIC	0.1U K	16V
	303 409 3426	CERAMIC	0.1U K	16V
C303	303 438 0219	CERAMIC	0.1U K	16V
	303 409 3426	CERAMIC	0.1U K	16V
C304	303 438 0219	CERAMIC	0.1U K	16V
	303 409 3426	CERAMIC	0.1U K	16V
C305	303 438 0219	CERAMIC	0.1U K	16V
	303 409 3426	CERAMIC	0.1U K	16V
C306	303 438 0219	CERAMIC	0.1U K	16V
	303 409 3426	CERAMIC	0.1U K	16V
C307	303 438 0219	CERAMIC	0.1U K	16V
	303 409 3426	CERAMIC	0.1U K	16V
C308	303 438 0219	CERAMIC	0.1U K	16V
	303 409 3426	CERAMIC	0.1U K	16V
C309	303 438 0219	CERAMIC	0.1U K	16V
	303 409 3426	CERAMIC	0.1U K	16V
C311	303 358 3215	CERAMIC	10U K	6.3V
	303 368 7319	CERAMIC	10U K	6.3V
C312	303 438 0219	CERAMIC	0.1U K	16V
	303 409 3426	CERAMIC	0.1U K	16V
C313	303 438 0219	CERAMIC	0.1U K	16V
	303 409 3426	CERAMIC	0.1U K	16V
C314	303 438 0219	CERAMIC	0.1U K	16V
	303 409 3426	CERAMIC	0.1U K	16V
C315	303 438 0219	CERAMIC	0.1U K	16V
	303 409 3426	CERAMIC	0.1U K	16V
C316	303 438 0219	CERAMIC	0.1U K	16V
	303 409 3426	CERAMIC	0.1U K	16V
C317	303 438 0219	CERAMIC	0.1U K	16V
	303 409 3426	CERAMIC	0.1U K	16V
C318	303 438 0219	CERAMIC	0.1U K	16V
	303 409 3426	CERAMIC	0.1U K	16V
C319	303 438 0219	CERAMIC	0.1U K	16V
	303 409 3426	CERAMIC	0.1U K	16V
C3201	303 438 0219	CERAMIC	0.1U K	16V
	303 409 3426	CERAMIC	0.1U K	16V
C3202	303 438 0219	CERAMIC	0.1U K	16V
	303 409 3426	CERAMIC	0.1U K	16V
C3203	303 438 0219	CERAMIC	0.1U K	16V
	303 409 3426	CERAMIC	0.1U K	16V
C3204	303 438 0219	CERAMIC	0.1U K	16V
	303 409 3426	CERAMIC	0.1U K	16V
C321	303 358 3215	CERAMIC	10U K	6.3V
	303 368 7319	CERAMIC	10U K	6.3V
C322	303 438 0219	CERAMIC	0.1U K	16V
	303 409 3426	CERAMIC	0.1U K	16V
C323	303 438 0219	CERAMIC	0.1U K	16V
	303 409 3426	CERAMIC	0.1U K	16V
C324	303 438 0219	CERAMIC	0.1U K	16V
	303 409 3426	CERAMIC	0.1U K	16V
C325	303 438 0219	CERAMIC	0.1U K	16V
	303 409 3426	CERAMIC	0.1U K	16V
C326	303 438 0219	CERAMIC	0.1U K	16V
	303 409 3426	CERAMIC	0.1U K	16V
C3262	303 438 0219	CERAMIC	0.1U K	16V
	303 409 3426	CERAMIC	0.1U K	16V

Electrical Parts List

Key No.	Part No.	Description		
C327	303 438 0219	CERAMIC	0.1U K	16V
	303 409 3426	CERAMIC	0.1U K	16V
C328	303 438 0219	CERAMIC	0.1U K	16V
	303 409 3426	CERAMIC	0.1U K	16V
C3281	303 394 1312	ELECT	100U M	6.3V
	303 427 9315	ELECT	100U M	6.3V
	303 387 4917	ELECT	100U M	6.3V
C3282	403 455 1012	CERAMIC	1U K	10V
	303 433 1112	CERAMIC	1U K	10V
C3283	403 455 1012	CERAMIC	1U K	10V
	303 433 1112	CERAMIC	1U K	10V
C3284	303 394 1312	ELECT	100U M	6.3V
	303 427 9315	ELECT	100U M	6.3V
	303 387 4917	ELECT	100U M	6.3V
C3285	403 455 1012	CERAMIC	1U K	10V
	303 433 1112	CERAMIC	1U K	10V
C3287	403 455 1012	CERAMIC	1U K	10V
	303 433 1112	CERAMIC	1U K	10V
C329	303 438 0219	CERAMIC	0.1U K	16V
	303 409 3426	CERAMIC	0.1U K	16V
C331	303 358 3215	CERAMIC	10U K	6.3V
	303 368 7319	CERAMIC	10U K	6.3V
C332	303 438 0219	CERAMIC	0.1U K	16V
	303 409 3426	CERAMIC	0.1U K	16V
C333	303 438 0219	CERAMIC	0.1U K	16V
	303 409 3426	CERAMIC	0.1U K	16V
C334	303 438 0219	CERAMIC	0.1U K	16V
	303 409 3426	CERAMIC	0.1U K	16V
C335	303 438 0219	CERAMIC	0.1U K	16V
	303 409 3426	CERAMIC	0.1U K	16V
C336	303 438 0219	CERAMIC	0.1U K	16V
	303 409 3426	CERAMIC	0.1U K	16V
C337	303 438 0219	CERAMIC	0.1U K	16V
	303 409 3426	CERAMIC	0.1U K	16V
C338	303 438 0219	CERAMIC	0.1U K	16V
	303 409 3426	CERAMIC	0.1U K	16V
C339	303 438 0219	CERAMIC	0.1U K	16V
	303 409 3426	CERAMIC	0.1U K	16V
C341	303 445 0318	CERAMIC	8P G	50V
C3411	303 438 0219	CERAMIC	0.1U K	16V
	303 409 3426	CERAMIC	0.1U K	16V
C3412	303 438 0219	CERAMIC	0.1U K	16V
	303 409 3426	CERAMIC	0.1U K	16V
C3413	303 438 0219	CERAMIC	0.1U K	16V
	303 409 3426	CERAMIC	0.1U K	16V
C3414	303 438 0219	CERAMIC	0.1U K	16V
	303 409 3426	CERAMIC	0.1U K	16V
C3416	303 438 0219	CERAMIC	0.1U K	16V
	303 409 3426	CERAMIC	0.1U K	16V
C3417	303 438 0219	CERAMIC	0.1U K	16V
	303 409 3426	CERAMIC	0.1U K	16V
C3418	303 358 3215	CERAMIC	10U K	6.3V
	303 368 7319	CERAMIC	10U K	6.3V
C342	303 445 0318	CERAMIC	8P G	50V
C343	403 455 1012	CERAMIC	1U K	10V
	303 433 1112	CERAMIC	1U K	10V
C344	303 438 0219	CERAMIC	0.1U K	16V
	303 409 3426	CERAMIC	0.1U K	16V
C345	303 438 0219	CERAMIC	0.1U K	16V
	303 409 3426	CERAMIC	0.1U K	16V
C346	303 392 5015	CERAMIC	22U M	6.3V
	303 443 9214	CERAMIC	22U M	6.3V
C347	303 392 5015	CERAMIC	22U M	6.3V
	303 443 9214	CERAMIC	22U M	6.3V
C348	303 392 5015	CERAMIC	22U M	6.3V
	303 443 9214	CERAMIC	22U M	6.3V
C351	303 358 3215	CERAMIC	10U K	6.3V
	303 368 7319	CERAMIC	10U K	6.3V
C352	303 438 0219	CERAMIC	0.1U K	16V
	303 409 3426	CERAMIC	0.1U K	16V
C353	303 438 0219	CERAMIC	0.1U K	16V
	303 409 3426	CERAMIC	0.1U K	16V
C354	303 438 0219	CERAMIC	0.1U K	16V
	303 409 3426	CERAMIC	0.1U K	16V
C355	303 438 0219	CERAMIC	0.1U K	16V
	303 409 3426	CERAMIC	0.1U K	16V
C356	303 438 0219	CERAMIC	0.1U K	16V
	303 409 3426	CERAMIC	0.1U K	16V
C357	303 438 0219	CERAMIC	0.1U K	16V
	303 409 3426	CERAMIC	0.1U K	16V
C358	303 438 0219	CERAMIC	0.1U K	16V
	303 409 3426	CERAMIC	0.1U K	16V
C359	303 438 0219	CERAMIC	0.1U K	16V
	303 409 3426	CERAMIC	0.1U K	16V
C360	303 276 1317	CERAMIC	1000P K	50V
C361	303 438 0219	CERAMIC	0.1U K	16V
	303 409 3426	CERAMIC	0.1U K	16V
C362	303 358 3215	CERAMIC	10U K	6.3V
	303 368 7319	CERAMIC	10U K	6.3V
C363	303 438 0219	CERAMIC	0.1U K	16V
	303 409 3426	CERAMIC	0.1U K	16V
C364	303 438 0219	CERAMIC	0.1U K	16V
	303 409 3426	CERAMIC	0.1U K	16V
C365	403 455 1012	CERAMIC	1U K	10V
	303 433 1112	CERAMIC	1U K	10V
C366	303 438 0219	CERAMIC	0.1U K	16V
	303 409 3426	CERAMIC	0.1U K	16V
C368	403 455 1012	CERAMIC	1U K	10V
	303 433 1112	CERAMIC	1U K	10V
C369	403 455 1012	CERAMIC	1U K	10V
	303 433 1112	CERAMIC	1U K	10V
C404	403 455 1012	CERAMIC	1U K	10V
	303 433 1112	CERAMIC	1U K	10V
C406	403 455 1012	CERAMIC	1U K	10V
	303 433 1112	CERAMIC	1U K	10V
C407	403 455 1012	CERAMIC	1U K	10V
	303 433 1112	CERAMIC	1U K	10V
C408	403 455 1012	CERAMIC	1U K	10V
	303 433 1112	CERAMIC	1U K	10V
C409	403 455 1012	CERAMIC	1U K	10V
	303 433 1112	CERAMIC	1U K	10V
C411	403 455 1012	CERAMIC	1U K	10V
	303 433 1112	CERAMIC	1U K	10V
C412	403 455 1012	CERAMIC	1U K	10V
	303 433 1112	CERAMIC	1U K	10V
C413	303 394 1312	ELECT	100U M	6.3V
	303 427 9315	ELECT	100U M	6.3V
	303 387 4917	ELECT	100U M	6.3V
C414	403 455 1012	CERAMIC	1U K	10V
	303 433 1112	CERAMIC	1U K	10V
C416	403 455 1012	CERAMIC	1U K	10V
	303 433 1112	CERAMIC	1U K	10V
C417	403 455 1012	CERAMIC	1U K	10V
	303 433 1112	CERAMIC	1U K	10V
C418	403 455 1012	CERAMIC	1U K	10V
	303 433 1112	CERAMIC	1U K	10V
C419	403 455 1012	CERAMIC	1U K	10V
	303 433 1112	CERAMIC	1U K	10V
C421	303 358 3215	CERAMIC	10U K	6.3V
	303 368 7319	CERAMIC	10U K	6.3V
C422	403 455 1012	CERAMIC	1U K	10V
	303 433 1112	CERAMIC	1U K	10V
C423	403 455 1012	CERAMIC	1U K	10V
	303 433 1112	CERAMIC	1U K	10V

Electrical Parts List

Key No.	Part No.	Description		
C424	403 455 1012	CERAMIC	1U K	10V
	303 433 1112	CERAMIC	1U K	10V
C426	403 455 1012	CERAMIC	1U K	10V
	303 433 1112	CERAMIC	1U K	10V
C427	403 455 1012	CERAMIC	1U K	10V
	303 433 1112	CERAMIC	1U K	10V
C428	303 397 6611	ELECT	10U M	25V
	303 387 6812	ELECT	10U M	25V
C429	403 455 1012	CERAMIC	1U K	10V
	303 433 1112	CERAMIC	1U K	10V
C431	303 397 6611	ELECT	10U M	25V
	303 387 6812	ELECT	10U M	25V
C432	403 455 1012	CERAMIC	1U K	10V
	303 433 1112	CERAMIC	1U K	10V
C433	403 455 1012	CERAMIC	1U K	10V
	303 433 1112	CERAMIC	1U K	10V
C434	403 455 1012	CERAMIC	1U K	10V
	303 433 1112	CERAMIC	1U K	10V
C436	403 455 1012	CERAMIC	1U K	10V
	303 433 1112	CERAMIC	1U K	10V
C437	303 358 3215	CERAMIC	10U K	6.3V
	303 368 7319	CERAMIC	10U K	6.3V
C438	403 455 1012	CERAMIC	1U K	10V
	303 433 1112	CERAMIC	1U K	10V
C439	403 455 1012	CERAMIC	1U K	10V
	303 433 1112	CERAMIC	1U K	10V
C441	403 455 1012	CERAMIC	1U K	10V
	303 433 1112	CERAMIC	1U K	10V
C442	403 455 1012	CERAMIC	1U K	10V
	303 433 1112	CERAMIC	1U K	10V
C443	403 455 1012	CERAMIC	1U K	10V
	303 433 1112	CERAMIC	1U K	10V
C444	303 358 3215	CERAMIC	10U K	6.3V
	303 368 7319	CERAMIC	10U K	6.3V
C446	403 455 1012	CERAMIC	1U K	10V
	303 433 1112	CERAMIC	1U K	10V
C447	403 455 1012	CERAMIC	1U K	10V
	303 433 1112	CERAMIC	1U K	10V
C448	403 455 1012	CERAMIC	1U K	10V
	303 433 1112	CERAMIC	1U K	10V
C449	303 358 3215	CERAMIC	10U K	6.3V
	303 368 7319	CERAMIC	10U K	6.3V
C451	403 455 1012	CERAMIC	1U K	10V
	303 433 1112	CERAMIC	1U K	10V
C452	403 455 1012	CERAMIC	1U K	10V
	303 433 1112	CERAMIC	1U K	10V
C453	403 455 1012	CERAMIC	1U K	10V
	303 433 1112	CERAMIC	1U K	10V
C454	403 455 1012	CERAMIC	1U K	10V
	303 433 1112	CERAMIC	1U K	10V
C456	303 394 1312	ELECT	100U M	6.3V
	303 427 9315	ELECT	100U M	6.3V
	303 387 4917	ELECT	100U M	6.3V
C457	403 455 1012	CERAMIC	1U K	10V
	303 433 1112	CERAMIC	1U K	10V
C458	403 455 1012	CERAMIC	1U K	10V
	303 433 1112	CERAMIC	1U K	10V
C459	403 455 1012	CERAMIC	1U K	10V
	303 433 1112	CERAMIC	1U K	10V
C461	403 455 1012	CERAMIC	1U K	10V
	303 433 1112	CERAMIC	1U K	10V
C462	403 455 1012	CERAMIC	1U K	10V
	303 433 1112	CERAMIC	1U K	10V
C463	403 455 1012	CERAMIC	1U K	10V
	303 433 1112	CERAMIC	1U K	10V
C464	403 455 1012	CERAMIC	1U K	10V
	303 433 1112	CERAMIC	1U K	10V
C466	403 455 1012	CERAMIC	1U K	10V
	303 433 1112	CERAMIC	1U K	10V
C467	403 455 1012	CERAMIC	1U K	10V
	303 433 1112	CERAMIC	1U K	10V
C468	403 455 1012	CERAMIC	1U K	10V
	303 433 1112	CERAMIC	1U K	10V
C469	403 455 1012	CERAMIC	1U K	10V
	303 433 1112	CERAMIC	1U K	10V
C4701	303 438 0219	CERAMIC	0.1U K	16V
	303 409 3426	CERAMIC	0.1U K	16V
C4709	303 438 0219	CERAMIC	0.1U K	16V
	303 409 3426	CERAMIC	0.1U K	16V
C471	303 358 3215	CERAMIC	10U K	6.3V
	303 368 7319	CERAMIC	10U K	6.3V
C4711	303 438 0219	CERAMIC	0.1U K	16V
	303 409 3426	CERAMIC	0.1U K	16V
C4712	303 438 0219	CERAMIC	0.1U K	16V
	303 409 3426	CERAMIC	0.1U K	16V
C472	403 455 1012	CERAMIC	1U K	10V
	303 433 1112	CERAMIC	1U K	10V
C473	403 455 1012	CERAMIC	1U K	10V
	303 433 1112	CERAMIC	1U K	10V
C4731	303 438 0219	CERAMIC	0.1U K	16V
	303 409 3426	CERAMIC	0.1U K	16V
C474	303 394 1312	ELECT	100U M	6.3V
	303 427 9315	ELECT	100U M	6.3V
	303 387 4917	ELECT	100U M	6.3V
C476	403 455 1012	CERAMIC	1U K	10V
	303 433 1112	CERAMIC	1U K	10V
C4762	303 438 0219	CERAMIC	0.1U K	16V
	303 409 3426	CERAMIC	0.1U K	16V
C477	403 455 1012	CERAMIC	1U K	10V
	303 433 1112	CERAMIC	1U K	10V
C478	403 455 1012	CERAMIC	1U K	10V
	303 433 1112	CERAMIC	1U K	10V
C4780	303 398 5415	ELECT	47U M	25V
	303 387 7314	ELECT	47U M	25V
C4781	303 376 3112	ELECT	100U M	25V
	303 374 7815	ELECT	100UM	25V
	303 444 0111	ELECT	100U M	25V
C4782	303 369 0527	CERAMIC	0.01U K	25V
C4783	303 376 3112	ELECT	100U M	25V
	303 374 7815	ELECT	100UM	25V
	303 444 0111	ELECT	100U M	25V
C4785	303 376 3112	ELECT	100U M	25V
	303 374 7815	ELECT	100UM	25V
	303 444 0111	ELECT	100U M	25V
C4786	303 367 0410	CERAMIC	0.1U K	50V
C479	303 358 3215	CERAMIC	10U K	6.3V
	303 368 7319	CERAMIC	10U K	6.3V
C4858	303 391 5115	ELECT	100U M	16V
	303 427 8417	ELECT	100U M	16V
C4859	303 438 0219	CERAMIC	0.1U K	16V
	303 409 3426	CERAMIC	0.1U K	16V
C4861	303 438 0219	CERAMIC	0.1U K	16V
	303 409 3426	CERAMIC	0.1U K	16V
C4862	303 382 0716	ELECT	470U M	10V
	403 458 4515	ELECT	470U M	10V
C4888	303 369 0527	CERAMIC	0.01U K	25V
C4889	303 369 0527	CERAMIC	0.01U K	25V
C501	303 398 3312	ELECT	47U M	10V
	303 387 6119	ELECT	47U M	10V
C502	403 455 1012	CERAMIC	1U K	10V
	303 433 1112	CERAMIC	1U K	10V
C503	303 396 9613	CERAMIC	1U K	25V
C504	303 396 9613	CERAMIC	1U K	25V
C505	403 455 1012	CERAMIC	1U K	10V

Electrical Parts List

Key No.	Part No.	Description		
	303 433 1112	CERAMIC	1U K	10V
C506	303 397 6611	ELECT	10U M	25V
	303 387 6812	ELECT	10U M	25V
C507	303 396 9613	CERAMIC	1U K	25V
C508	303 396 9613	CERAMIC	1U K	25V
C509	303 396 9613	CERAMIC	1U K	25V
C511	303 396 9613	CERAMIC	1U K	25V
C512	303 282 5118	CERAMIC	470P K	50V
C513	303 396 9613	CERAMIC	1U K	25V
C514	303 397 6611	ELECT	10U M	25V
	303 387 6812	ELECT	10U M	25V
C516	303 396 9613	CERAMIC	1U K	25V
C517	303 396 9613	CERAMIC	1U K	25V
C518	403 455 1012	CERAMIC	1U K	10V
	303 433 1112	CERAMIC	1U K	10V
C5201	403 455 1012	CERAMIC	1U K	10V
	303 433 1112	CERAMIC	1U K	10V
C5202	403 455 1012	CERAMIC	1U K	10V
	303 433 1112	CERAMIC	1U K	10V
C5203	403 455 1012	CERAMIC	1U K	10V
	303 433 1112	CERAMIC	1U K	10V
C5204	403 455 1012	CERAMIC	1U K	10V
	303 433 1112	CERAMIC	1U K	10V
C5205	403 455 1012	CERAMIC	1U K	10V
	303 433 1112	CERAMIC	1U K	10V
C5206	403 455 1012	CERAMIC	1U K	10V
	303 433 1112	CERAMIC	1U K	10V
C5207	403 455 1012	CERAMIC	1U K	10V
	303 433 1112	CERAMIC	1U K	10V
C5209	403 455 1012	CERAMIC	1U K	10V
	303 433 1112	CERAMIC	1U K	10V
C5211	403 455 1012	CERAMIC	1U K	10V
	303 433 1112	CERAMIC	1U K	10V
C5212	403 455 1012	CERAMIC	1U K	10V
	303 433 1112	CERAMIC	1U K	10V
C5213	403 455 1012	CERAMIC	1U K	10V
	303 433 1112	CERAMIC	1U K	10V
C5214	403 455 1012	CERAMIC	1U K	10V
	303 433 1112	CERAMIC	1U K	10V
C5215	403 455 1012	CERAMIC	1U K	10V
	303 433 1112	CERAMIC	1U K	10V
C5216	403 455 1012	CERAMIC	1U K	10V
	303 433 1112	CERAMIC	1U K	10V
C5217	403 455 1012	CERAMIC	1U K	10V
	303 433 1112	CERAMIC	1U K	10V
C5218	403 455 1012	CERAMIC	1U K	10V
	303 433 1112	CERAMIC	1U K	10V
C5219	403 455 1012	CERAMIC	1U K	10V
	303 433 1112	CERAMIC	1U K	10V
C5221	403 455 1012	CERAMIC	1U K	10V
	303 433 1112	CERAMIC	1U K	10V
C5222	403 455 1012	CERAMIC	1U K	10V
	303 433 1112	CERAMIC	1U K	10V
C5228	403 455 1012	CERAMIC	1U K	10V
	303 433 1112	CERAMIC	1U K	10V
C5231	403 455 1012	CERAMIC	1U K	10V
	303 433 1112	CERAMIC	1U K	10V
C5232	403 455 1012	CERAMIC	1U K	10V
	303 433 1112	CERAMIC	1U K	10V
C5233	403 455 1012	CERAMIC	1U K	10V
	303 433 1112	CERAMIC	1U K	10V
C5234	403 455 1012	CERAMIC	1U K	10V
	303 433 1112	CERAMIC	1U K	10V
C5235	403 455 1012	CERAMIC	1U K	10V
	303 433 1112	CERAMIC	1U K	10V
C5236	403 455 1012	CERAMIC	1U K	10V
	303 433 1112	CERAMIC	1U K	10V
C5237	403 455 1012	CERAMIC	1U K	10V
	303 433 1112	CERAMIC	1U K	10V
C5238	403 455 1012	CERAMIC	1U K	10V
	303 433 1112	CERAMIC	1U K	10V
C5241	303 438 0219	CERAMIC	0.1U K	16V
	303 409 3426	CERAMIC	0.1U K	16V
C5242	303 438 0219	CERAMIC	0.1U K	16V
	303 409 3426	CERAMIC	0.1U K	16V
C5243	303 438 0219	CERAMIC	0.1U K	16V
	303 409 3426	CERAMIC	0.1U K	16V
C5244	303 358 3215	CERAMIC	10U K	6.3V
	303 368 7319	CERAMIC	10U K	6.3V
C5245	303 394 1312	ELECT	100U M	6.3V
	303 427 9315	ELECT	100U M	6.3V
	303 387 4917	ELECT	100U M	6.3V
C5247	303 394 1312	ELECT	100U M	6.3V
	303 427 9315	ELECT	100U M	6.3V
	303 387 4917	ELECT	100U M	6.3V
C5248	403 455 1012	CERAMIC	1U K	10V
	303 433 1112	CERAMIC	1U K	10V
C5251	303 398 2216	ELECT	470U M	6.3V
C5252	303 438 0219	CERAMIC	0.1U K	16V
	303 409 3426	CERAMIC	0.1U K	16V
C5253	303 358 3215	CERAMIC	10U K	6.3V
	303 368 7319	CERAMIC	10U K	6.3V
C5254	303 394 1312	ELECT	100U M	6.3V
	303 427 9315	ELECT	100U M	6.3V
	303 387 4917	ELECT	100U M	6.3V
C5256	403 455 1012	CERAMIC	1U K	10V
	303 433 1112	CERAMIC	1U K	10V
C531	303 398 3312	ELECT	47U M	10V
	303 387 6119	ELECT	47U M	10V
C532	403 455 1012	CERAMIC	1U K	10V
	303 433 1112	CERAMIC	1U K	10V
C533	303 396 9613	CERAMIC	1U K	25V
C534	303 396 9613	CERAMIC	1U K	25V
C535	403 455 1012	CERAMIC	1U K	10V
	303 433 1112	CERAMIC	1U K	10V
C536	303 397 6611	ELECT	10U M	25V
	303 387 6812	ELECT	10U M	25V
C537	303 396 9613	CERAMIC	1U K	25V
C538	303 396 9613	CERAMIC	1U K	25V
C539	303 396 9613	CERAMIC	1U K	25V
C541	303 396 9613	CERAMIC	1U K	25V
C542	303 282 5118	CERAMIC	470P K	50V
C543	303 396 9613	CERAMIC	1U K	25V
C544	303 397 6611	ELECT	10U M	25V
	303 387 6812	ELECT	10U M	25V
C546	303 396 9613	CERAMIC	1U K	25V
C547	303 396 9613	CERAMIC	1U K	25V
C548	403 455 1012	CERAMIC	1U K	10V
	303 433 1112	CERAMIC	1U K	10V
C5501	303 379 6714	CERAMIC	10U K	16V
C5502	303 376 3112	ELECT	100U M	25V
	303 374 7815	ELECT	100UM	25V
	303 444 0111	ELECT	100U M	25V
C5503	303 376 3112	ELECT	100U M	25V
	303 374 7815	ELECT	100UM	25V
	303 444 0111	ELECT	100U M	25V
C5504	303 438 0219	CERAMIC	0.1U K	16V
	303 409 3426	CERAMIC	0.1U K	16V
C5505	303 369 0527	CERAMIC	0.01U K	25V
C561	303 398 3312	ELECT	47U M	10V
	303 387 6119	ELECT	47U M	10V
C562	403 455 1012	CERAMIC	1U K	10V
	303 433 1112	CERAMIC	1U K	10V
C563	303 396 9613	CERAMIC	1U K	25V

Electrical Parts List

Key No.	Part No.	Description		
C564	303 396 9613	CERAMIC	1U K	25V
C565	403 455 1012	CERAMIC	1U K	10V
	303 433 1112	CERAMIC	1U K	10V
C5651	303 376 3112	ELECT	100U M	25V
	303 374 7815	ELECT	100UM	25V
	303 444 0111	ELECT	100U M	25V
C5652	303 438 0219	CERAMIC	0.1U K	16V
	303 409 3426	CERAMIC	0.1U K	16V
C5653	303 376 3112	ELECT	100U M	25V
	303 374 7815	ELECT	100UM	25V
	303 444 0111	ELECT	100U M	25V
C5654	303 369 0527	CERAMIC	0.01U K	25V
C566	303 397 6611	ELECT	10U M	25V
	303 387 6812	ELECT	10U M	25V
C5661	403 455 1012	CERAMIC	1U K	10V
	303 433 1112	CERAMIC	1U K	10V
C5662	303 358 3215	CERAMIC	10U K	6.3V
	303 368 7319	CERAMIC	10U K	6.3V
C5665	403 455 1012	CERAMIC	1U K	10V
	303 433 1112	CERAMIC	1U K	10V
C5666	303 438 0219	CERAMIC	0.1U K	16V
	303 409 3426	CERAMIC	0.1U K	16V
C5667	303 449 3018	CERAMIC	0.68U K	10V
C5668	303 358 3215	CERAMIC	10U K	6.3V
	303 368 7319	CERAMIC	10U K	6.3V
C5669	303 381 9918	ELECT	470U M	16V
	303 407 3517	ELECT	470U M	16V
	403 458 5017	ELECT	470U M	16V
C567	303 396 9613	CERAMIC	1U K	25V
C5670	303 438 0219	CERAMIC	0.1U K	16V
	303 409 3426	CERAMIC	0.1U K	16V
C5671	403 455 1012	CERAMIC	1U K	10V
	303 433 1112	CERAMIC	1U K	10V
C5672	303 358 3215	CERAMIC	10U K	6.3V
	303 368 7319	CERAMIC	10U K	6.3V
C5673	403 455 1616	CERAMIC	10U K	16V
C5674	403 455 1616	CERAMIC	10U K	16V
C5675	303 438 0219	CERAMIC	0.1U K	16V
	303 409 3426	CERAMIC	0.1U K	16V
C5677	303 438 0219	CERAMIC	0.1U K	16V
	303 409 3426	CERAMIC	0.1U K	16V
C5678	303 438 0219	CERAMIC	0.1U K	16V
	303 409 3426	CERAMIC	0.1U K	16V
C568	303 396 9613	CERAMIC	1U K	25V
C5680	303 438 0219	CERAMIC	0.1U K	16V
	303 409 3426	CERAMIC	0.1U K	16V
C5681	403 455 1012	CERAMIC	1U K	10V
	303 433 1112	CERAMIC	1U K	10V
C5682	303 376 6311	CERAMIC	0.47U K	10V
C5683	303 376 6311	CERAMIC	0.47U K	10V
C5684	303 358 3215	CERAMIC	10U K	6.3V
	303 368 7319	CERAMIC	10U K	6.3V
C5685	403 455 1012	CERAMIC	1U K	10V
	303 433 1112	CERAMIC	1U K	10V
C5686	303 358 3215	CERAMIC	10U K	6.3V
	303 368 7319	CERAMIC	10U K	6.3V
C5687	303 376 6311	CERAMIC	0.47U K	10V
C5688	303 376 6311	CERAMIC	0.47U K	10V
C5689	303 450 7012	CERAMIC	47U K	10V
C569	303 396 9613	CERAMIC	1U K	25V
C571	303 396 9613	CERAMIC	1U K	25V
C5711	303 438 0219	CERAMIC	0.1U K	16V
	303 409 3426	CERAMIC	0.1U K	16V
C5712	303 438 0219	CERAMIC	0.1U K	16V
	303 409 3426	CERAMIC	0.1U K	16V
C5713	403 455 1012	CERAMIC	1U K	10V
	303 433 1112	CERAMIC	1U K	10V
C5714	303 438 0219	CERAMIC	0.1U K	16V
	303 409 3426	CERAMIC	0.1U K	16V
C5715	303 441 9810	CERAMIC	0.01U K	50V
C5716	303 438 0219	CERAMIC	0.1U K	16V
	303 409 3426	CERAMIC	0.1U K	16V
C5717	303 438 0219	CERAMIC	0.1U K	16V
	303 409 3426	CERAMIC	0.1U K	16V
C572	303 282 5118	CERAMIC	470P K	50V
C573	303 396 9613	CERAMIC	1U K	25V
C5731	303 438 0219	CERAMIC	0.1U K	16V
	303 409 3426	CERAMIC	0.1U K	16V
C5732	303 438 0219	CERAMIC	0.1U K	16V
	303 409 3426	CERAMIC	0.1U K	16V
C5738	303 438 0219	CERAMIC	0.1U K	16V
	303 409 3426	CERAMIC	0.1U K	16V
C5739	303 438 0219	CERAMIC	0.1U K	16V
	303 409 3426	CERAMIC	0.1U K	16V
C574	303 397 6611	ELECT	10U M	25V
	303 387 6812	ELECT	10U M	25V
C5740	303 438 0219	CERAMIC	0.1U K	16V
	303 409 3426	CERAMIC	0.1U K	16V
C5751	303 438 0219	CERAMIC	0.1U K	16V
	303 409 3426	CERAMIC	0.1U K	16V
C5752	303 438 0219	CERAMIC	0.1U K	16V
	303 409 3426	CERAMIC	0.1U K	16V
C5753	303 438 0219	CERAMIC	0.1U K	16V
	303 409 3426	CERAMIC	0.1U K	16V
C5754	303 438 0219	CERAMIC	0.1U K	16V
	303 409 3426	CERAMIC	0.1U K	16V
C576	303 396 9613	CERAMIC	1U K	25V
C577	303 396 9613	CERAMIC	1U K	25V
C578	403 455 1012	CERAMIC	1U K	10V
	303 433 1112	CERAMIC	1U K	10V
C5782	303 305 8812	CERAMIC	47P J	50V
C5801	403 455 1012	CERAMIC	1U K	10V
	303 433 1112	CERAMIC	1U K	10V
C5802	403 455 1012	CERAMIC	1U K	10V
	303 433 1112	CERAMIC	1U K	10V
C5803	403 455 1012	CERAMIC	1U K	10V
	303 433 1112	CERAMIC	1U K	10V
C5804	403 455 1012	CERAMIC	1U K	10V
	303 433 1112	CERAMIC	1U K	10V
C5805	403 455 1012	CERAMIC	1U K	10V
	303 433 1112	CERAMIC	1U K	10V
C5806	403 455 1012	CERAMIC	1U K	10V
	303 433 1112	CERAMIC	1U K	10V
C5807	403 455 1012	CERAMIC	1U K	10V
	303 433 1112	CERAMIC	1U K	10V
C5808	403 455 1012	CERAMIC	1U K	10V
	303 433 1112	CERAMIC	1U K	10V
C5809	403 455 1012	CERAMIC	1U K	10V
	303 433 1112	CERAMIC	1U K	10V
C5811	403 455 1012	CERAMIC	1U K	10V
	303 433 1112	CERAMIC	1U K	10V
C5812	403 455 1012	CERAMIC	1U K	10V
	303 433 1112	CERAMIC	1U K	10V
C5813	403 455 1012	CERAMIC	1U K	10V
	303 433 1112	CERAMIC	1U K	10V
C5814	403 455 1012	CERAMIC	1U K	10V
	303 433 1112	CERAMIC	1U K	10V
C5815	403 455 1012	CERAMIC	1U K	10V
	303 433 1112	CERAMIC	1U K	10V
C5816	403 455 1012	CERAMIC	1U K	10V
	303 433 1112	CERAMIC	1U K	10V
C5817	403 455 1012	CERAMIC	1U K	10V
	303 433 1112	CERAMIC	1U K	10V
C5818	403 455 1012	CERAMIC	1U K	10V

Electrical Parts List

Key No.	Part No.	Description		
	303 433 1112	CERAMIC	1U K	10V
C5819	403 455 1012	CERAMIC	1U K	10V
	303 433 1112	CERAMIC	1U K	10V
C5821	403 455 1012	CERAMIC	1U K	10V
	303 433 1112	CERAMIC	1U K	10V
C5822	403 455 1012	CERAMIC	1U K	10V
	303 433 1112	CERAMIC	1U K	10V
C5823	303 394 1312	ELECT	100U M	6.3V
	303 427 9315	ELECT	100U M	6.3V
	303 387 4917	ELECT	100U M	6.3V
C5824	303 358 3215	CERAMIC	10U K	6.3V
	303 368 7319	CERAMIC	10U K	6.3V
C5825	403 455 1012	CERAMIC	1U K	10V
	303 433 1112	CERAMIC	1U K	10V
C5826	403 455 1012	CERAMIC	1U K	10V
	303 433 1112	CERAMIC	1U K	10V
C5827	403 455 1012	CERAMIC	1U K	10V
	303 433 1112	CERAMIC	1U K	10V
C5828	403 455 1012	CERAMIC	1U K	10V
	303 433 1112	CERAMIC	1U K	10V
C5829	403 455 1012	CERAMIC	1U K	10V
	303 433 1112	CERAMIC	1U K	10V
C5831	403 455 1012	CERAMIC	1U K	10V
	303 433 1112	CERAMIC	1U K	10V
C5832	403 455 1012	CERAMIC	1U K	10V
	303 433 1112	CERAMIC	1U K	10V
C5833	403 455 1012	CERAMIC	1U K	10V
	303 433 1112	CERAMIC	1U K	10V
C5834	403 455 1012	CERAMIC	1U K	10V
	303 433 1112	CERAMIC	1U K	10V
C5835	303 394 1312	ELECT	100U M	6.3V
	303 427 9315	ELECT	100U M	6.3V
	303 387 4917	ELECT	100U M	6.3V
C5836	303 438 0219	CERAMIC	0.1U K	16V
	303 409 3426	CERAMIC	0.1U K	16V
C5837	403 455 1012	CERAMIC	1U K	10V
	303 433 1112	CERAMIC	1U K	10V
C5838	403 455 1012	CERAMIC	1U K	10V
	303 433 1112	CERAMIC	1U K	10V
C5839	303 438 0219	CERAMIC	0.1U K	16V
	303 409 3426	CERAMIC	0.1U K	16V
C5841	403 455 1012	CERAMIC	1U K	10V
	303 433 1112	CERAMIC	1U K	10V
C5843	403 455 1012	CERAMIC	1U K	10V
	303 433 1112	CERAMIC	1U K	10V
C5845	303 438 0219	CERAMIC	0.1U K	16V
	303 409 3426	CERAMIC	0.1U K	16V
C5856	403 455 1012	CERAMIC	1U K	10V
	303 433 1112	CERAMIC	1U K	10V
C5857	403 455 1012	CERAMIC	1U K	10V
	303 433 1112	CERAMIC	1U K	10V
C5858	403 455 1012	CERAMIC	1U K	10V
	303 433 1112	CERAMIC	1U K	10V
C5859	403 455 1012	CERAMIC	1U K	10V
	303 433 1112	CERAMIC	1U K	10V
C5861	403 455 1012	CERAMIC	1U K	10V
	303 433 1112	CERAMIC	1U K	10V
C5862	403 455 1012	CERAMIC	1U K	10V
	303 433 1112	CERAMIC	1U K	10V
C5863	403 455 1012	CERAMIC	1U K	10V
	303 433 1112	CERAMIC	1U K	10V
C5864	403 455 1012	CERAMIC	1U K	10V
	303 433 1112	CERAMIC	1U K	10V
C5865	403 455 1012	CERAMIC	1U K	10V
	303 433 1112	CERAMIC	1U K	10V
C5866	403 455 1012	CERAMIC	1U K	10V
	303 433 1112	CERAMIC	1U K	10V
C5867	403 455 1012	CERAMIC	1U K	10V
	303 433 1112	CERAMIC	1U K	10V
C5868	403 455 1012	CERAMIC	1U K	10V
	303 433 1112	CERAMIC	1U K	10V
C5869	403 455 1012	CERAMIC	1U K	10V
	303 433 1112	CERAMIC	1U K	10V
C5875	403 455 1012	CERAMIC	1U K	10V
	303 433 1112	CERAMIC	1U K	10V
C5876	403 455 1012	CERAMIC	1U K	10V
	303 433 1112	CERAMIC	1U K	10V
C5877	403 455 1012	CERAMIC	1U K	10V
	303 433 1112	CERAMIC	1U K	10V
C5878	403 455 1012	CERAMIC	1U K	10V
	303 433 1112	CERAMIC	1U K	10V
C5879	403 455 1012	CERAMIC	1U K	10V
	303 433 1112	CERAMIC	1U K	10V
C5881	403 455 1012	CERAMIC	1U K	10V
	303 433 1112	CERAMIC	1U K	10V
C5882	403 455 1012	CERAMIC	1U K	10V
	303 433 1112	CERAMIC	1U K	10V
C5883	403 455 1012	CERAMIC	1U K	10V
	303 433 1112	CERAMIC	1U K	10V
C5884	403 455 1012	CERAMIC	1U K	10V
	303 433 1112	CERAMIC	1U K	10V
C5885	403 455 1012	CERAMIC	1U K	10V
	303 433 1112	CERAMIC	1U K	10V
C5886	403 455 1012	CERAMIC	1U K	10V
	303 433 1112	CERAMIC	1U K	10V
C5887	403 455 1012	CERAMIC	1U K	10V
	303 433 1112	CERAMIC	1U K	10V
C5888	403 455 1012	CERAMIC	1U K	10V
	303 433 1112	CERAMIC	1U K	10V
C5889	403 455 1012	CERAMIC	1U K	10V
	303 433 1112	CERAMIC	1U K	10V
C5891	403 455 1012	CERAMIC	1U K	10V
	303 433 1112	CERAMIC	1U K	10V
C5892	303 398 2117	ELECT	330U M	6.3V
	403 468 6318	ELECT	330U M	6.3V
C5893	303 438 0219	CERAMIC	0.1U K	16V
	303 409 3426	CERAMIC	0.1U K	16V
C5894	303 394 1312	ELECT	100U M	6.3V
	303 427 9315	ELECT	100U M	6.3V
	303 387 4917	ELECT	100U M	6.3V
C5895	303 358 3215	CERAMIC	10U K	6.3V
	303 368 7319	CERAMIC	10U K	6.3V
C5896	403 455 1012	CERAMIC	1U K	10V
	303 433 1112	CERAMIC	1U K	10V
C5897	403 455 1012	CERAMIC	1U K	10V
	303 433 1112	CERAMIC	1U K	10V
C591	303 376 3112	ELECT	100U M	25V
	303 374 7815	ELECT	100UM	25V
	303 444 0111	ELECT	100U M	25V
C592	303 367 0410	CERAMIC	0.1U K	50V
C593	303 376 3112	ELECT	100U M	25V
	303 374 7815	ELECT	100UM	25V
	303 444 0111	ELECT	100U M	25V
C594	303 367 0410	CERAMIC	0.1U K	50V
C6201	403 455 1012	CERAMIC	1U K	10V
	303 433 1112	CERAMIC	1U K	10V
C6202	403 455 1012	CERAMIC	1U K	10V
	303 433 1112	CERAMIC	1U K	10V
C6203	403 455 1012	CERAMIC	1U K	10V
	303 433 1112	CERAMIC	1U K	10V
C6204	403 455 1012	CERAMIC	1U K	10V
	303 433 1112	CERAMIC	1U K	10V
C6205	403 455 1012	CERAMIC	1U K	10V
	303 433 1112	CERAMIC	1U K	10V

Electrical Parts List

Key No.	Part No.	Description		
C6206	403 455 1012	CERAMIC	1U K	10V
	303 433 1112	CERAMIC	1U K	10V
C6207	403 455 1012	CERAMIC	1U K	10V
	303 433 1112	CERAMIC	1U K	10V
C6208	403 455 1012	CERAMIC	1U K	10V
	303 433 1112	CERAMIC	1U K	10V
C6209	403 455 1012	CERAMIC	1U K	10V
	303 433 1112	CERAMIC	1U K	10V
C6211	403 455 1012	CERAMIC	1U K	10V
	303 433 1112	CERAMIC	1U K	10V
C6212	403 455 1012	CERAMIC	1U K	10V
	303 433 1112	CERAMIC	1U K	10V
C6213	403 455 1012	CERAMIC	1U K	10V
	303 433 1112	CERAMIC	1U K	10V
C6214	403 455 1012	CERAMIC	1U K	10V
	303 433 1112	CERAMIC	1U K	10V
C6215	403 455 1012	CERAMIC	1U K	10V
	303 433 1112	CERAMIC	1U K	10V
C6216	403 455 1012	CERAMIC	1U K	10V
	303 433 1112	CERAMIC	1U K	10V
C6217	403 455 1012	CERAMIC	1U K	10V
	303 433 1112	CERAMIC	1U K	10V
C6218	403 455 1012	CERAMIC	1U K	10V
	303 433 1112	CERAMIC	1U K	10V
C6219	403 455 1012	CERAMIC	1U K	10V
	303 433 1112	CERAMIC	1U K	10V
C6221	403 455 1012	CERAMIC	1U K	10V
	303 433 1112	CERAMIC	1U K	10V
C6222	403 455 1012	CERAMIC	1U K	10V
	303 433 1112	CERAMIC	1U K	10V
C6223	403 455 1012	CERAMIC	1U K	10V
	303 433 1112	CERAMIC	1U K	10V
C6224	403 455 1012	CERAMIC	1U K	10V
	303 433 1112	CERAMIC	1U K	10V
C6225	403 455 1012	CERAMIC	1U K	10V
	303 433 1112	CERAMIC	1U K	10V
C6226	403 455 1012	CERAMIC	1U K	10V
	303 433 1112	CERAMIC	1U K	10V
C6227	403 455 1012	CERAMIC	1U K	10V
	303 433 1112	CERAMIC	1U K	10V
C6228	403 455 1012	CERAMIC	1U K	10V
	303 433 1112	CERAMIC	1U K	10V
C6229	403 455 1012	CERAMIC	1U K	10V
	303 433 1112	CERAMIC	1U K	10V
C6231	403 455 1012	CERAMIC	1U K	10V
	303 433 1112	CERAMIC	1U K	10V
C6232	403 455 1012	CERAMIC	1U K	10V
	303 433 1112	CERAMIC	1U K	10V
C6233	403 455 1012	CERAMIC	1U K	10V
	303 433 1112	CERAMIC	1U K	10V
C6234	403 455 1012	CERAMIC	1U K	10V
	303 433 1112	CERAMIC	1U K	10V
C6235	403 455 1012	CERAMIC	1U K	10V
	303 433 1112	CERAMIC	1U K	10V
C6236	403 455 1012	CERAMIC	1U K	10V
	303 433 1112	CERAMIC	1U K	10V
C6237	403 455 1012	CERAMIC	1U K	10V
	303 433 1112	CERAMIC	1U K	10V
C6238	403 455 1012	CERAMIC	1U K	10V
	303 433 1112	CERAMIC	1U K	10V
C6239	403 455 1012	CERAMIC	1U K	10V
	303 433 1112	CERAMIC	1U K	10V
C6241	403 455 1012	CERAMIC	1U K	10V
	303 433 1112	CERAMIC	1U K	10V
C6242	403 455 1012	CERAMIC	1U K	10V
	303 433 1112	CERAMIC	1U K	10V
C6243	403 455 1012	CERAMIC	1U K	10V
	303 433 1112	CERAMIC	1U K	10V
C6244	403 455 1012	CERAMIC	1U K	10V
	303 433 1112	CERAMIC	1U K	10V
C6245	403 455 1012	CERAMIC	1U K	10V
	303 433 1112	CERAMIC	1U K	10V
C6246	403 455 1012	CERAMIC	1U K	10V
	303 433 1112	CERAMIC	1U K	10V
C6247	403 455 1012	CERAMIC	1U K	10V
	303 433 1112	CERAMIC	1U K	10V
C6248	403 455 1012	CERAMIC	1U K	10V
	303 433 1112	CERAMIC	1U K	10V
C6249	403 455 1012	CERAMIC	1U K	10V
	303 433 1112	CERAMIC	1U K	10V
C6251	403 455 1012	CERAMIC	1U K	10V
	303 433 1112	CERAMIC	1U K	10V
C6252	403 455 1012	CERAMIC	1U K	10V
	303 433 1112	CERAMIC	1U K	10V
C6253	403 455 1012	CERAMIC	1U K	10V
	303 433 1112	CERAMIC	1U K	10V
C6254	403 455 1012	CERAMIC	1U K	10V
	303 433 1112	CERAMIC	1U K	10V
C6255	403 455 1012	CERAMIC	1U K	10V
	303 433 1112	CERAMIC	1U K	10V
C6256	403 455 1012	CERAMIC	1U K	10V
	303 433 1112	CERAMIC	1U K	10V
C6258	403 455 1012	CERAMIC	1U K	10V
	303 433 1112	CERAMIC	1U K	10V
C6259	403 455 1012	CERAMIC	1U K	10V
	303 433 1112	CERAMIC	1U K	10V
C6261	403 455 1012	CERAMIC	1U K	10V
	303 433 1112	CERAMIC	1U K	10V
C6262	403 455 1012	CERAMIC	1U K	10V
	303 433 1112	CERAMIC	1U K	10V
C6263	403 455 1012	CERAMIC	1U K	10V
	303 433 1112	CERAMIC	1U K	10V
C6264	403 455 1012	CERAMIC	1U K	10V
	303 433 1112	CERAMIC	1U K	10V
C6265	403 455 1012	CERAMIC	1U K	10V
	303 433 1112	CERAMIC	1U K	10V
C6266	403 455 1012	CERAMIC	1U K	10V
	303 433 1112	CERAMIC	1U K	10V
C6267	403 455 1012	CERAMIC	1U K	10V
	303 433 1112	CERAMIC	1U K	10V
C6268	403 455 1012	CERAMIC	1U K	10V
	303 433 1112	CERAMIC	1U K	10V
C6269	403 455 1012	CERAMIC	1U K	10V
	303 433 1112	CERAMIC	1U K	10V
C6271	403 455 1012	CERAMIC	1U K	10V
	303 433 1112	CERAMIC	1U K	10V
C6272	403 455 1012	CERAMIC	1U K	10V
	303 433 1112	CERAMIC	1U K	10V
C6273	403 455 1012	CERAMIC	1U K	10V
	303 433 1112	CERAMIC	1U K	10V
C6274	403 455 1012	CERAMIC	1U K	10V
	303 433 1112	CERAMIC	1U K	10V
C6276	403 455 1012	CERAMIC	1U K	10V
	303 433 1112	CERAMIC	1U K	10V
C6277	403 455 1012	CERAMIC	1U K	10V
	303 433 1112	CERAMIC	1U K	10V
C6278	403 455 1012	CERAMIC	1U K	10V
	303 433 1112	CERAMIC	1U K	10V
C6279	403 455 1012	CERAMIC	1U K	10V
	303 433 1112	CERAMIC	1U K	10V
C6281	403 455 1012	CERAMIC	1U K	10V
	303 433 1112	CERAMIC	1U K	10V
C6282	403 455 1012	CERAMIC	1U K	10V
	303 433 1112	CERAMIC	1U K	10V

Electrical Parts List

Key No.	Part No.	Description		
C7721	303 396 9613	CERAMIC	1U K	25V
C7723	303 367 0410	CERAMIC	0.1U K	50V
C7724	303 367 0410	CERAMIC	0.1U K	50V
C7726	303 367 0410	CERAMIC	0.1U K	50V
C7727	303 381 5613	ELECT	220U M	16V
	303 423 8916	ELECT	220U M	16V
	403 458 4812	ELECT	220U M	16V
C7728	303 336 3510	CERAMIC	0.47U K	16V
C7729	303 336 3510	CERAMIC	0.47U K	16V
C7730	303 437 4614	CERAMIC	10U K	25V
C7731	403 455 1012	CERAMIC	1U K	10V
	303 433 1112	CERAMIC	1U K	10V
C7732	303 438 0219	CERAMIC	0.1U K	16V
	303 409 3426	CERAMIC	0.1U K	16V
C7733	303 381 9918	ELECT	470U M	16V
	303 407 3517	ELECT	470U M	16V
	403 458 5017	ELECT	470U M	16V
C7734	403 455 1012	CERAMIC	1U K	10V
	303 433 1112	CERAMIC	1U K	10V
C7736	303 358 3215	CERAMIC	10U K	6.3V
	303 368 7319	CERAMIC	10U K	6.3V
C7792	303 438 0219	CERAMIC	0.1U K	16V
	303 409 3426	CERAMIC	0.1U K	16V
C7798	303 366 3610	OS-SOLID	47U M	20V
C7801	303 398 5415	ELECT	47U M	25V
	303 387 7314	ELECT	47U M	25V
C7802	303 441 9810	CERAMIC	0.01U K	50V
C7803	303 441 9810	CERAMIC	0.01U K	50V
C7804	303 391 5115	ELECT	100U M	16V
	303 427 8417	ELECT	100U M	16V
C7805	303 398 5415	ELECT	47U M	25V
	303 387 7314	ELECT	47U M	25V
C7806	303 441 9810	CERAMIC	0.01U K	50V
C7807	303 441 9810	CERAMIC	0.01U K	50V
C7808	303 391 5115	ELECT	100U M	16V
	303 427 8417	ELECT	100U M	16V
C7821	303 391 5115	ELECT	100U M	16V
	303 427 8417	ELECT	100U M	16V
C7822	303 438 0219	CERAMIC	0.1U K	16V
	303 409 3426	CERAMIC	0.1U K	16V
C7823	303 358 3215	CERAMIC	10U K	6.3V
	303 368 7319	CERAMIC	10U K	6.3V
C7824	303 394 1312	ELECT	100U M	6.3V
	303 427 9315	ELECT	100U M	6.3V
	303 387 4917	ELECT	100U M	6.3V
C7825	303 438 0219	CERAMIC	0.1U K	16V
	303 409 3426	CERAMIC	0.1U K	16V
C7826	303 438 0219	CERAMIC	0.1U K	16V
	303 409 3426	CERAMIC	0.1U K	16V
C7827	303 438 0219	CERAMIC	0.1U K	16V
	303 409 3426	CERAMIC	0.1U K	16V
C7831	303 438 0219	CERAMIC	0.1U K	16V
	303 409 3426	CERAMIC	0.1U K	16V
C7832	303 438 0219	CERAMIC	0.1U K	16V
	303 409 3426	CERAMIC	0.1U K	16V
C7835	303 438 0219	CERAMIC	0.1U K	16V
	303 409 3426	CERAMIC	0.1U K	16V
C7836	303 438 0219	CERAMIC	0.1U K	16V
	303 409 3426	CERAMIC	0.1U K	16V
C7837	303 358 3215	CERAMIC	10U K	6.3V
	303 368 7319	CERAMIC	10U K	6.3V
C7838	303 438 0219	CERAMIC	0.1U K	16V
	303 409 3426	CERAMIC	0.1U K	16V
C7882	303 438 0219	CERAMIC	0.1U K	16V
	303 409 3426	CERAMIC	0.1U K	16V
C7883	303 438 0219	CERAMIC	0.1U K	16V
	303 409 3426	CERAMIC	0.1U K	16V
C801	303 394 1312	ELECT	100U M	6.3V
	303 427 9315	ELECT	100U M	6.3V
	303 387 4917	ELECT	100U M	6.3V
C802	303 358 3215	CERAMIC	10U K	6.3V
	303 368 7319	CERAMIC	10U K	6.3V
C803	303 438 0219	CERAMIC	0.1U K	16V
	303 409 3426	CERAMIC	0.1U K	16V
C804	303 438 0219	CERAMIC	0.1U K	16V
	303 409 3426	CERAMIC	0.1U K	16V
C805	303 276 1317	CERAMIC	1000P K	50V
C806	303 438 0219	CERAMIC	0.1U K	16V
	303 409 3426	CERAMIC	0.1U K	16V
C807	303 438 0219	CERAMIC	0.1U K	16V
	303 409 3426	CERAMIC	0.1U K	16V
C808	303 438 0219	CERAMIC	0.1U K	16V
	303 409 3426	CERAMIC	0.1U K	16V
C809	303 438 0219	CERAMIC	0.1U K	16V
	303 409 3426	CERAMIC	0.1U K	16V
C811	303 438 0219	CERAMIC	0.1U K	16V
	303 409 3426	CERAMIC	0.1U K	16V
C812	303 438 0219	CERAMIC	0.1U K	16V
	303 409 3426	CERAMIC	0.1U K	16V
C813	303 438 0219	CERAMIC	0.1U K	16V
	303 409 3426	CERAMIC	0.1U K	16V
C814	303 438 0219	CERAMIC	0.1U K	16V
	303 409 3426	CERAMIC	0.1U K	16V
C815	303 438 0219	CERAMIC	0.1U K	16V
	303 409 3426	CERAMIC	0.1U K	16V
C816	303 438 0219	CERAMIC	0.1U K	16V
	303 409 3426	CERAMIC	0.1U K	16V
C817	303 438 0219	CERAMIC	0.1U K	16V
	303 409 3426	CERAMIC	0.1U K	16V
C818	303 438 0219	CERAMIC	0.1U K	16V
	303 409 3426	CERAMIC	0.1U K	16V
C819	303 438 0219	CERAMIC	0.1U K	16V
	303 409 3426	CERAMIC	0.1U K	16V
C8201	303 394 1312	ELECT	100U M	6.3V
	303 427 9315	ELECT	100U M	6.3V
	303 387 4917	ELECT	100U M	6.3V
C8202	303 276 1317	CERAMIC	1000P K	50V
C8204	303 438 0219	CERAMIC	0.1U K	16V
	303 409 3426	CERAMIC	0.1U K	16V
C821	303 438 0219	CERAMIC	0.1U K	16V
	303 409 3426	CERAMIC	0.1U K	16V
C8211	303 276 1317	CERAMIC	1000P K	50V
C8213	303 438 0219	CERAMIC	0.1U K	16V
	303 409 3426	CERAMIC	0.1U K	16V
C822	303 438 0219	CERAMIC	0.1U K	16V
	303 409 3426	CERAMIC	0.1U K	16V
C8221	303 276 1317	CERAMIC	1000P K	50V
C8223	303 438 0219	CERAMIC	0.1U K	16V
	303 409 3426	CERAMIC	0.1U K	16V
C823	303 438 0219	CERAMIC	0.1U K	16V
	303 409 3426	CERAMIC	0.1U K	16V
C824	303 282 5118	CERAMIC	470P K	50V
C825	303 282 5118	CERAMIC	470P K	50V
C8251	303 438 0219	CERAMIC	0.1U K	16V
	303 409 3426	CERAMIC	0.1U K	16V
C8252	303 314 5314	CERAMIC	5P C	50V
C826	303 438 0219	CERAMIC	0.1U K	16V
	303 409 3426	CERAMIC	0.1U K	16V
C8263	303 438 0219	CERAMIC	0.1U K	16V
	303 409 3426	CERAMIC	0.1U K	16V
C827	303 438 0219	CERAMIC	0.1U K	16V
	303 409 3426	CERAMIC	0.1U K	16V
C828	303 438 0219	CERAMIC	0.1U K	16V
	303 409 3426	CERAMIC	0.1U K	16V

Electrical Parts List

Key No.	Part No.	Description		
C829	303 438 0219	CERAMIC	0.1U K	16V
	303 409 3426	CERAMIC	0.1U K	16V
C830	303 398 5415	ELECT	47U M	25V
	303 387 7314	ELECT	47U M	25V
C831	303 438 0219	CERAMIC	0.1U K	16V
	303 409 3426	CERAMIC	0.1U K	16V
C832	303 438 0219	CERAMIC	0.1U K	16V
	303 409 3426	CERAMIC	0.1U K	16V
C833	303 438 0219	CERAMIC	0.1U K	16V
	303 409 3426	CERAMIC	0.1U K	16V
C834	303 438 0219	CERAMIC	0.1U K	16V
	303 409 3426	CERAMIC	0.1U K	16V
C835	303 438 0219	CERAMIC	0.1U K	16V
	303 409 3426	CERAMIC	0.1U K	16V
C836	303 397 6611	ELECT	10U M	25V
	303 387 6812	ELECT	10U M	25V
C837	403 455 1012	CERAMIC	1U K	10V
	303 433 1112	CERAMIC	1U K	10V
C838	303 438 0219	CERAMIC	0.1U K	16V
	303 409 3426	CERAMIC	0.1U K	16V
C841	303 438 0219	CERAMIC	0.1U K	16V
	303 409 3426	CERAMIC	0.1U K	16V
C842	303 438 0219	CERAMIC	0.1U K	16V
	303 409 3426	CERAMIC	0.1U K	16V
C844	303 438 0219	CERAMIC	0.1U K	16V
	303 409 3426	CERAMIC	0.1U K	16V
C8881	303 369 0527	CERAMIC	0.01U K	25V
C8884	303 369 0527	CERAMIC	0.01U K	25V
C8885	303 276 1317	CERAMIC	1000P K	50V
C8886	303 276 1317	CERAMIC	1000P K	50V
C9801	303 438 0219	CERAMIC	0.1U K	16V
	303 409 3426	CERAMIC	0.1U K	16V
C9802	303 438 0219	CERAMIC	0.1U K	16V
	303 409 3426	CERAMIC	0.1U K	16V
C9803	303 438 0219	CERAMIC	0.1U K	16V
	303 409 3426	CERAMIC	0.1U K	16V
C9804	303 438 0219	CERAMIC	0.1U K	16V
	303 409 3426	CERAMIC	0.1U K	16V
C9805	303 401 4916	ELECT	4.7U M	50V
	403 458 5116	ELECT	4.7U M	50V
C9806	303 438 0219	CERAMIC	0.1U K	16V
	303 409 3426	CERAMIC	0.1U K	16V
C9829	303 438 0219	CERAMIC	0.1U K	16V
	303 409 3426	CERAMIC	0.1U K	16V
C9830	303 438 0219	CERAMIC	0.1U K	16V
	303 409 3426	CERAMIC	0.1U K	16V
C9831	303 438 0219	CERAMIC	0.1U K	16V
	303 409 3426	CERAMIC	0.1U K	16V
C9832	303 441 9810	CERAMIC	0.01U K	50V
C9833	303 441 9810	CERAMIC	0.01U K	50V
C9837	303 441 9810	CERAMIC	0.01U K	50V
C9838	303 441 9810	CERAMIC	0.01U K	50V
C9839	303 367 0410	CERAMIC	0.1U K	50V
C9842	303 376 3112	ELECT	100U M	25V
	303 374 7815	ELECT	100UM	25V
	303 444 0111	ELECT	100U M	25V
C9843	303 398 7815	ELECT	22U M	35V
C9844	303 367 0410	CERAMIC	0.1U K	50V
C9845	303 379 7315	CERAMIC	4700P K	50V
C9846	303 367 0410	CERAMIC	0.1U K	50V
C9847	303 306 6510	CERAMIC	8200P K	50V
C9848	303 367 0410	CERAMIC	0.1U K	50V
RESISTOR				
R1303	301 224 9316	MT-GLAZE	1K JA	1/16W
R1304	301 224 9316	MT-GLAZE	1K JA	1/16W
R1307	301 224 9019	MT-GLAZE	10K JA	1/16W
R1308	301 224 9019	MT-GLAZE	10K JA	1/16W
R1309	301 224 9019	MT-GLAZE	10K JA	1/16W
R1311	301 224 9019	MT-GLAZE	10K JA	1/16W
R1312	301 225 8516	MT-GLAZE	1.8K JA	1/16W
R1313	301 224 9019	MT-GLAZE	10K JA	1/16W
R1333	301 225 0213	MT-GLAZE	3.3K JA	1/16W
R1338	301 224 9316	MT-GLAZE	1K JA	1/16W
R1339	301 224 9019	MT-GLAZE	10K JA	1/16W
R1343	301 301 0410	MT-GLAZE	240 FA	1/16W
R1344	301 302 5414	MT-GLAZE	220 FA	1/16W
R1345	301 294 3115	MT-GLAZE	1K FA	1/16W
R1346	301 294 2910	MT-GLAZE	560 FA	1/16W
R1347	301 294 2910	MT-GLAZE	560 FA	1/16W
R1348	301 294 3115	MT-GLAZE	1K FA	1/16W
R1349	301 224 9019	MT-GLAZE	10K JA	1/16W
R1352	301 226 1516	MT-GLAZE	0.000 ZA	1/16W
R1373	301 226 1516	MT-GLAZE	0.000 ZA	1/16W
R1374	301 226 1516	MT-GLAZE	0.000 ZA	1/16W
R1375	301 226 1516	MT-GLAZE	0.000 ZA	1/16W
R1376	301 226 1516	MT-GLAZE	0.000 ZA	1/16W
R1377	301 226 1516	MT-GLAZE	0.000 ZA	1/16W
R1378	301 226 1516	MT-GLAZE	0.000 ZA	1/16W
R1379	301 226 1516	MT-GLAZE	0.000 ZA	1/16W
R1380	301 226 1516	MT-GLAZE	0.000 ZA	1/16W
R1397	301 224 9019	MT-GLAZE	10K JA	1/16W
R1398	301 224 9019	MT-GLAZE	10K JA	1/16W
R1401	301 225 1210	MT-GLAZE	4.7K JA	1/16W
R1402	301 225 1210	MT-GLAZE	4.7K JA	1/16W
R1404	301 226 1516	MT-GLAZE	0.000 ZA	1/16W
R1405	301 226 1516	MT-GLAZE	0.000 ZA	1/16W
R1407	301 224 9019	MT-GLAZE	10K JA	1/16W
R1408	301 226 1516	MT-GLAZE	0.000 ZA	1/16W
R1409	301 226 1516	MT-GLAZE	0.000 ZA	1/16W
R1411	301 226 1516	MT-GLAZE	0.000 ZA	1/16W
R1412	301 226 1516	MT-GLAZE	0.000 ZA	1/16W
R1416	301 226 1516	MT-GLAZE	0.000 ZA	1/16W
R1417	301 226 1516	MT-GLAZE	0.000 ZA	1/16W
R1418	301 225 1210	MT-GLAZE	4.7K JA	1/16W
R1419	301 225 1210	MT-GLAZE	4.7K JA	1/16W
R1421	301 224 9712	MT-GLAZE	22 JA	1/16W
R1423	301 224 9712	MT-GLAZE	22 JA	1/16W
R1427	301 224 9712	MT-GLAZE	22 JA	1/16W
R1428	301 226 1516	MT-GLAZE	0.000 ZA	1/16W
R1429	301 224 8814	MT-GLAZE	100 JA	1/16W
R1441	301 294 3115	MT-GLAZE	1K FA	1/16W
R1442	301 338 6713	MT-GLAZE	1.6K FA	1/16W
R1443	301 299 2410	MT-GLAZE	5.6K FA	1/16W
R1451	301 224 9019	MT-GLAZE	10K JA	1/16W
R1452	301 225 1210	MT-GLAZE	4.7K JA	1/16W
R1453	301 150 6014	MT-GLAZE	0.000 ZA	1/10W
R1454	301 225 1210	MT-GLAZE	4.7K JA	1/16W
R1456	301 299 4810	MT-GLAZE	2.7K FA	1/16W
R1457	301 284 3326	MT-GLAZE	3K FA	1/16W
R1458	301 299 2410	MT-GLAZE	5.6K FA	1/16W
R1501	301 226 1516	MT-GLAZE	0.000 ZA	1/16W
R1502	301 226 1516	MT-GLAZE	0.000 ZA	1/16W
R1503	301 226 1516	MT-GLAZE	0.000 ZA	1/16W
R1504	301 226 1516	MT-GLAZE	0.000 ZA	1/16W
R1506	301 226 1516	MT-GLAZE	0.000 ZA	1/16W
R1508	301 226 1516	MT-GLAZE	0.000 ZA	1/16W
R1510	301 225 8110	MT-GLAZE	10 JA	1/16W
R1512	301 224 9019	MT-GLAZE	10K JA	1/16W
R1514	301 225 1814	MT-GLAZE	47 JA	1/16W
R1515	301 224 9019	MT-GLAZE	10K JA	1/16W
R1531	301 226 1516	MT-GLAZE	0.000 ZA	1/16W
R1532	301 226 1516	MT-GLAZE	0.000 ZA	1/16W
R1533	301 226 1516	MT-GLAZE	0.000 ZA	1/16W

Electrical Parts List

Key No.	Part No.	Description		
R1534	301 226 1516	MT-GLAZE	0.000 ZA	1/16W
R1536	301 226 1516	MT-GLAZE	0.000 ZA	1/16W
R1539	301 226 1516	MT-GLAZE	0.000 ZA	1/16W
R1540	301 225 8110	MT-GLAZE	10 JA	1/16W
R1542	301 224 9019	MT-GLAZE	10K JA	1/16W
R1544	301 225 8110	MT-GLAZE	10 JA	1/16W
R1545	301 224 9019	MT-GLAZE	10K JA	1/16W
R1561	301 226 1516	MT-GLAZE	0.000 ZA	1/16W
R1562	301 226 1516	MT-GLAZE	0.000 ZA	1/16W
R1563	301 226 1516	MT-GLAZE	0.000 ZA	1/16W
R1564	301 226 1516	MT-GLAZE	0.000 ZA	1/16W
R1567	301 226 1516	MT-GLAZE	0.000 ZA	1/16W
R1570	301 225 8110	MT-GLAZE	10 JA	1/16W
R1572	301 224 9019	MT-GLAZE	10K JA	1/16W
R1574	301 225 1814	MT-GLAZE	47 JA	1/16W
R1575	301 224 9019	MT-GLAZE	10K JA	1/16W
R1581	301 224 9712	MT-GLAZE	22 JA	1/16W
R1582	301 226 1516	MT-GLAZE	0.000 ZA	1/16W
R1584	301 225 1814	MT-GLAZE	47 JA	1/16W
R1585	301 226 1516	MT-GLAZE	0.000 ZA	1/16W
R1587	301 224 9712	MT-GLAZE	22 JA	1/16W
R1588	301 226 1516	MT-GLAZE	0.000 ZA	1/16W
R1801	301 224 8814	MT-GLAZE	100 JA	1/16W
R1802	301 224 8814	MT-GLAZE	100 JA	1/16W
R1803	301 224 8814	MT-GLAZE	100 JA	1/16W
R1804	301 224 8814	MT-GLAZE	100 JA	1/16W
R1805	301 224 8814	MT-GLAZE	100 JA	1/16W
R1806	301 224 8814	MT-GLAZE	100 JA	1/16W
R1807	301 224 8814	MT-GLAZE	100 JA	1/16W
R1808	301 225 8110	MT-GLAZE	10 JA	1/16W
R1809	301 225 1210	MT-GLAZE	4.7K JA	1/16W
R1810	301 225 1814	MT-GLAZE	47 JA	1/16W
R1811	301 225 8110	MT-GLAZE	10 JA	1/16W
R1812	301 225 1210	MT-GLAZE	4.7K JA	1/16W
R1813	301 225 1210	MT-GLAZE	4.7K JA	1/16W
R1814	301 224 9019	MT-GLAZE	10K JA	1/16W
R1817	301 225 8110	MT-GLAZE	10 JA	1/16W
R1818	301 225 8110	MT-GLAZE	10 JA	1/16W
R1819	301 225 1210	MT-GLAZE	4.7K JA	1/16W
R1821	301 225 1210	MT-GLAZE	4.7K JA	1/16W
R1822	301 225 1210	MT-GLAZE	4.7K JA	1/16W
R1823	301 224 9019	MT-GLAZE	10K JA	1/16W
R1824	301 226 1516	MT-GLAZE	0.000 ZA	1/16W
R1825	301 225 1210	MT-GLAZE	4.7K JA	1/16W
R1827	301 225 1319	MT-GLAZE	470 JA	1/16W
R1828	301 224 9019	MT-GLAZE	10K JA	1/16W
R1831	301 226 1516	MT-GLAZE	0.000 ZA	1/16W
R1832	301 224 9019	MT-GLAZE	10K JA	1/16W
R1834	301 226 1516	MT-GLAZE	0.000 ZA	1/16W
R1835	301 224 9316	MT-GLAZE	1K JA	1/16W
R1836	301 224 9316	MT-GLAZE	1K JA	1/16W
R1837	301 224 9316	MT-GLAZE	1K JA	1/16W
R1840	301 294 3016	MT-GLAZE	10K FA	1/16W
R1842	301 224 9019	MT-GLAZE	10K JA	1/16W
R1843	301 229 7218	MT-GLAZE	18K JA	1/16W
R1844	301 226 1516	MT-GLAZE	0.000 ZA	1/16W
R1846	301 284 3326	MT-GLAZE	3K FA	1/16W
R1847	301 299 2410	MT-GLAZE	5.6K FA	1/16W
R1848	301 226 1516	MT-GLAZE	0.000 ZA	1/16W
R1851	301 226 1516	MT-GLAZE	0.000 ZA	1/16W
R1852	301 226 1516	MT-GLAZE	0.000 ZA	1/16W
R1853	301 226 1516	MT-GLAZE	0.000 ZA	1/16W
R1856	301 224 9316	MT-GLAZE	1K JA	1/16W
R1857	301 224 9316	MT-GLAZE	1K JA	1/16W
R1858	301 224 9316	MT-GLAZE	1K JA	1/16W
R1859	301 224 9316	MT-GLAZE	1K JA	1/16W
R1860	301 224 9019	MT-GLAZE	10K JA	1/16W
R1861	301 226 1516	MT-GLAZE	0.000 ZA	1/16W
R1863	301 224 9019	MT-GLAZE	10K JA	1/16W
R1864	301 224 9019	MT-GLAZE	10K JA	1/16W
R1865	301 226 1516	MT-GLAZE	0.000 ZA	1/16W
R1866	301 224 9019	MT-GLAZE	10K JA	1/16W
R1867	301 225 1210	MT-GLAZE	4.7K JA	1/16W
R1871	301 225 8110	MT-GLAZE	10 JA	1/16W
R1872	301 225 8110	MT-GLAZE	10 JA	1/16W
R1873	301 226 1516	MT-GLAZE	0.000 ZA	1/16W
R1875	301 226 1516	MT-GLAZE	0.000 ZA	1/16W
R1876	301 225 8011	MT-GLAZE	330 JA	1/16W
R1877	301 225 8011	MT-GLAZE	330 JA	1/16W
R1878	301 224 9019	MT-GLAZE	10K JA	1/16W
R1879	301 225 8011	MT-GLAZE	330 JA	1/16W
R1881	301 224 9019	MT-GLAZE	10K JA	1/16W
R1882	301 224 9019	MT-GLAZE	10K JA	1/16W
R1884	301 226 1516	MT-GLAZE	0.000 ZA	1/16W
R1885	301 226 1516	MT-GLAZE	0.000 ZA	1/16W
R1886	301 224 8814	MT-GLAZE	100 JA	1/16W
R1888	301 224 8814	MT-GLAZE	100 JA	1/16W
R1889	301 226 1516	MT-GLAZE	0.000 ZA	1/16W
R1892	301 224 9019	MT-GLAZE	10K JA	1/16W
R1893	301 225 1913	MT-GLAZE	68 JA	1/16W
R1894	301 225 1913	MT-GLAZE	68 JA	1/16W
R1895	301 225 1913	MT-GLAZE	68 JA	1/16W
R1896	301 224 9712	MT-GLAZE	22 JA	1/16W
R1897	301 224 9712	MT-GLAZE	22 JA	1/16W
R1898	301 224 9712	MT-GLAZE	22 JA	1/16W
R201	301 226 1516	MT-GLAZE	0.000 ZA	1/16W
R202	301 263 7420	MT-GLAZE	75 JA	1/16W
R204	301 224 8814	MT-GLAZE	100 JA	1/16W
R205	301 224 8814	MT-GLAZE	100 JA	1/16W
R209	301 224 9019	MT-GLAZE	10K JA	1/16W
R211	301 226 1516	MT-GLAZE	0.000 ZA	1/16W
R212	301 263 7420	MT-GLAZE	75 JA	1/16W
R214	301 224 8814	MT-GLAZE	100 JA	1/16W
R215	301 224 8814	MT-GLAZE	100 JA	1/16W
R219	301 224 9019	MT-GLAZE	10K JA	1/16W
R220	301 224 8814	MT-GLAZE	100 JA	1/16W
R2201	301 225 8110	MT-GLAZE	10 JA	1/16W
R2203	301 224 9712	MT-GLAZE	22 JA	1/16W
R221	301 226 1516	MT-GLAZE	0.000 ZA	1/16W
R2211	301 225 1319	MT-GLAZE	470 JA	1/16W
R2212	301 225 8110	MT-GLAZE	10 JA	1/16W
R2213	301 225 8110	MT-GLAZE	10 JA	1/16W
R2214	301 225 8110	MT-GLAZE	10 JA	1/16W
R2215	301 225 8110	MT-GLAZE	10 JA	1/16W
R2217	301 225 8110	MT-GLAZE	10 JA	1/16W
R2219	301 225 8110	MT-GLAZE	10 JA	1/16W
R222	301 263 7420	MT-GLAZE	75 JA	1/16W
R2222	301 225 1210	MT-GLAZE	4.7K JA	1/16W
R2223	301 225 1418	MT-GLAZE	47K JA	1/16W
R2224	301 226 1516	MT-GLAZE	0.000 ZA	1/16W
R2225	301 226 1516	MT-GLAZE	0.000 ZA	1/16W
R2227	301 226 1516	MT-GLAZE	0.000 ZA	1/16W
R2231	301 226 1516	MT-GLAZE	0.000 ZA	1/16W
R2232	301 226 1516	MT-GLAZE	0.000 ZA	1/16W
R2234	301 226 1516	MT-GLAZE	0.000 ZA	1/16W
R2235	301 226 1516	MT-GLAZE	0.000 ZA	1/16W
R2236	301 226 1516	MT-GLAZE	0.000 ZA	1/16W
R2237	301 224 9712	MT-GLAZE	22 JA	1/16W
R2238	301 224 9712	MT-GLAZE	22 JA	1/16W
R2239	301 224 9712	MT-GLAZE	22 JA	1/16W
R2241	301 224 9712	MT-GLAZE	22 JA	1/16W
R225	301 224 8814	MT-GLAZE	100 JA	1/16W
R2250	301 224 8814	MT-GLAZE	100 JA	1/16W
R2252	301 294 3115	MT-GLAZE	1K FA	1/16W

Electrical Parts List

Key No.	Part No.	Description		
R2253	301 298 5511	MT-GLAZE	8.2K FA	1/16W
R2254	301 299 2410	MT-GLAZE	5.6K FA	1/16W
R2255	301 294 3115	MT-GLAZE	1K FA	1/16W
R2256	301 338 6713	MT-GLAZE	1.6K FA	1/16W
R2257	301 299 2410	MT-GLAZE	5.6K FA	1/16W
R229	301 224 9019	MT-GLAZE	10K JA	1/16W
R231	301 225 0312	MT-GLAZE	33 JA	1/16W
R241	301 225 0312	MT-GLAZE	33 JA	1/16W
R2501	301 225 8110	MT-GLAZE	10 JA	1/16W
R2503	301 225 0213	MT-GLAZE	3.3K JA	1/16W
R2504	301 259 2115	MT-GLAZE	1 JA	1/16W
R2507	301 225 0213	MT-GLAZE	3.3K JA	1/16W
R2508	301 259 2115	MT-GLAZE	1 JA	1/16W
R2509	301 226 1516	MT-GLAZE	0.000 ZA	1/16W
R2522	301 226 1516	MT-GLAZE	0.000 ZA	1/16W
R2523	301 224 8913	MT-GLAZE	100K JA	1/16W
R2524	301 226 1516	MT-GLAZE	0.000 ZA	1/16W
R2526	301 226 1516	MT-GLAZE	0.000 ZA	1/16W
R2531	301 225 8110	MT-GLAZE	10 JA	1/16W
R2533	301 225 0213	MT-GLAZE	3.3K JA	1/16W
R2534	301 259 2115	MT-GLAZE	1 JA	1/16W
R2537	301 225 0213	MT-GLAZE	3.3K JA	1/16W
R2538	301 259 2115	MT-GLAZE	1 JA	1/16W
R2539	301 226 1516	MT-GLAZE	0.000 ZA	1/16W
R2541	301 224 8814	MT-GLAZE	100 JA	1/16W
R2542	301 224 8814	MT-GLAZE	100 JA	1/16W
R2552	301 226 1516	MT-GLAZE	0.000 ZA	1/16W
R2553	301 224 8913	MT-GLAZE	100K JA	1/16W
R2554	301 226 1516	MT-GLAZE	0.000 ZA	1/16W
R2556	301 226 1516	MT-GLAZE	0.000 ZA	1/16W
R2561	301 225 8110	MT-GLAZE	10 JA	1/16W
R2563	301 225 0213	MT-GLAZE	3.3K JA	1/16W
R2564	301 259 2115	MT-GLAZE	1 JA	1/16W
R2567	301 225 0213	MT-GLAZE	3.3K JA	1/16W
R2568	301 259 2115	MT-GLAZE	1 JA	1/16W
R2569	301 226 1516	MT-GLAZE	0.000 ZA	1/16W
R2572	301 226 1516	MT-GLAZE	0.000 ZA	1/16W
R2573	301 224 8913	MT-GLAZE	100K JA	1/16W
R2574	301 226 1516	MT-GLAZE	0.000 ZA	1/16W
R2576	301 226 1516	MT-GLAZE	0.000 ZA	1/16W
R261	301 225 0312	MT-GLAZE	33 JA	1/16W
R271	301 224 9019	MT-GLAZE	10K JA	1/16W
R272	301 224 9316	MT-GLAZE	1K JA	1/16W
R301	301 224 9712	MT-GLAZE	22 JA	1/16W
R302	301 224 9712	MT-GLAZE	22 JA	1/16W
R303	301 224 9712	MT-GLAZE	22 JA	1/16W
R304	301 224 9712	MT-GLAZE	22 JA	1/16W
R305	301 224 9712	MT-GLAZE	22 JA	1/16W
R306	301 224 9712	MT-GLAZE	22 JA	1/16W
R307	301 225 8110	MT-GLAZE	10 JA	1/16W
R309	301 224 9019	MT-GLAZE	10K JA	1/16W
R315	301 226 1516	MT-GLAZE	0.000 ZA	1/16W
R316	301 224 9712	MT-GLAZE	22 JA	1/16W
R317	301 224 9712	MT-GLAZE	22 JA	1/16W
R318	301 224 9712	MT-GLAZE	22 JA	1/16W
R319	301 224 9712	MT-GLAZE	22 JA	1/16W
R3204	301 226 1516	MT-GLAZE	0.000 ZA	1/16W
R3208	301 226 1516	MT-GLAZE	0.000 ZA	1/16W
R321	301 224 9712	MT-GLAZE	22 JA	1/16W
R3210	301 226 1516	MT-GLAZE	0.000 ZA	1/16W
R3212	301 226 1516	MT-GLAZE	0.000 ZA	1/16W
R3214	301 226 1516	MT-GLAZE	0.000 ZA	1/16W
R3216	301 226 1516	MT-GLAZE	0.000 ZA	1/16W
R3218	301 226 1516	MT-GLAZE	0.000 ZA	1/16W
R322	301 224 9712	MT-GLAZE	22 JA	1/16W
R3220	301 226 1516	MT-GLAZE	0.000 ZA	1/16W
R3223	301 224 9019	MT-GLAZE	10K JA	1/16W
R3225	301 224 9019	MT-GLAZE	10K JA	1/16W
R323	301 224 9712	MT-GLAZE	22 JA	1/16W
R324	301 224 9712	MT-GLAZE	22 JA	1/16W
R326	301 224 9019	MT-GLAZE	10K JA	1/16W
R3281	301 035 4111	MT-GLAZE	0.000 ZA	1/8W
R3283	301 226 1516	MT-GLAZE	0.000 ZA	1/16W
R3284	301 035 4111	MT-GLAZE	0.000 ZA	1/8W
R3291	301 226 1516	MT-GLAZE	0.000 ZA	1/16W
R332	301 226 1516	MT-GLAZE	0.000 ZA	1/16W
R334	301 226 1516	MT-GLAZE	0.000 ZA	1/16W
R338	301 225 8110	MT-GLAZE	10 JA	1/16W
R339	301 225 8110	MT-GLAZE	10 JA	1/16W
R341	301 225 8110	MT-GLAZE	10 JA	1/16W
R3411	301 224 9316	MT-GLAZE	1K JA	1/16W
R3412	301 224 9019	MT-GLAZE	10K JA	1/16W
R3413	301 224 9019	MT-GLAZE	10K JA	1/16W
R3414	301 224 9019	MT-GLAZE	10K JA	1/16W
R3416	301 224 9019	MT-GLAZE	10K JA	1/16W
R3417	301 224 9316	MT-GLAZE	1K JA	1/16W
R3419	301 224 9316	MT-GLAZE	1K JA	1/16W
R342	301 224 9019	MT-GLAZE	10K JA	1/16W
R343	301 225 8110	MT-GLAZE	10 JA	1/16W
R344	301 225 8110	MT-GLAZE	10 JA	1/16W
R345	301 225 8110	MT-GLAZE	10 JA	1/16W
R347	301 225 8110	MT-GLAZE	10 JA	1/16W
R348	301 225 8110	MT-GLAZE	10 JA	1/16W
R349	301 225 8110	MT-GLAZE	10 JA	1/16W
R350	301 225 1210	MT-GLAZE	4.7K JA	1/16W
R351	301 225 8110	MT-GLAZE	10 JA	1/16W
R352	301 225 1210	MT-GLAZE	4.7K JA	1/16W
R353	301 224 9019	MT-GLAZE	10K JA	1/16W
R354	301 224 9712	MT-GLAZE	22 JA	1/16W
R355	301 224 9712	MT-GLAZE	22 JA	1/16W
R356	301 224 9712	MT-GLAZE	22 JA	1/16W
R357	301 224 9712	MT-GLAZE	22 JA	1/16W
R359	301 226 1516	MT-GLAZE	0.000 ZA	1/16W
R360	301 226 1516	MT-GLAZE	0.000 ZA	1/16W
R361	301 226 1516	MT-GLAZE	0.000 ZA	1/16W
R363	301 224 9019	MT-GLAZE	10K JA	1/16W
R364	301 224 9415	MT-GLAZE	1M JA	1/16W
R365	301 225 8516	MT-GLAZE	1.8K JA	1/16W
R366	301 225 8516	MT-GLAZE	1.8K JA	1/16W
R368	301 224 9712	MT-GLAZE	22 JA	1/16W
R369	301 224 9712	MT-GLAZE	22 JA	1/16W
R372	301 224 9019	MT-GLAZE	10K JA	1/16W
R373	301 224 9019	MT-GLAZE	10K JA	1/16W
R374	301 224 9712	MT-GLAZE	22 JA	1/16W
R375	301 224 9712	MT-GLAZE	22 JA	1/16W
R376	301 224 9712	MT-GLAZE	22 JA	1/16W
R377	301 224 9712	MT-GLAZE	22 JA	1/16W
R387	301 224 9019	MT-GLAZE	10K JA	1/16W
R388	301 224 9019	MT-GLAZE	10K JA	1/16W
R389	301 226 1516	MT-GLAZE	0.000 ZA	1/16W
R391	301 226 1516	MT-GLAZE	0.000 ZA	1/16W
R392	301 225 8110	MT-GLAZE	10 JA	1/16W
R393	301 225 1913	MT-GLAZE	68 JA	1/16W
R394	301 225 1913	MT-GLAZE	68 JA	1/16W
R396	301 226 1516	MT-GLAZE	0.000 ZA	1/16W
R397	301 224 9019	MT-GLAZE	10K JA	1/16W
R398	301 224 9019	MT-GLAZE	10K JA	1/16W
R399	301 226 1516	MT-GLAZE	0.000 ZA	1/16W
R406	301 224 9712	MT-GLAZE	22 JA	1/16W
R407	301 224 9712	MT-GLAZE	22 JA	1/16W
R408	301 224 9712	MT-GLAZE	22 JA	1/16W
R411	301 224 9712	MT-GLAZE	22 JA	1/16W
R412	301 224 9712	MT-GLAZE	22 JA	1/16W
R413	301 224 9712	MT-GLAZE	22 JA	1/16W

Electrical Parts List

Key No.	Part No.	Description		
R414	301 224 9712	MT-GLAZE	22 JA	1/16W
R415	301 224 9712	MT-GLAZE	22 JA	1/16W
R416	301 224 9712	MT-GLAZE	22 JA	1/16W
R417	301 224 9712	MT-GLAZE	22 JA	1/16W
R418	301 224 9712	MT-GLAZE	22 JA	1/16W
R419	301 224 9712	MT-GLAZE	22 JA	1/16W
R420	301 224 9712	MT-GLAZE	22 JA	1/16W
R421	301 224 9712	MT-GLAZE	22 JA	1/16W
R422	301 224 9712	MT-GLAZE	22 JA	1/16W
R423	301 224 9712	MT-GLAZE	22 JA	1/16W
R424	301 224 9712	MT-GLAZE	22 JA	1/16W
R425	301 224 9712	MT-GLAZE	22 JA	1/16W
R426	301 224 9712	MT-GLAZE	22 JA	1/16W
R427	301 224 9712	MT-GLAZE	22 JA	1/16W
R428	301 224 9712	MT-GLAZE	22 JA	1/16W
R431	301 224 9712	MT-GLAZE	22 JA	1/16W
R432	301 224 9712	MT-GLAZE	22 JA	1/16W
R433	301 224 9712	MT-GLAZE	22 JA	1/16W
R434	301 224 9712	MT-GLAZE	22 JA	1/16W
R435	301 224 9712	MT-GLAZE	22 JA	1/16W
R436	301 224 9712	MT-GLAZE	22 JA	1/16W
R437	301 224 9712	MT-GLAZE	22 JA	1/16W
R438	301 224 9712	MT-GLAZE	22 JA	1/16W
R439	301 224 9712	MT-GLAZE	22 JA	1/16W
R441	301 226 1516	MT-GLAZE	0.000 ZA	1/16W
R442	301 224 9712	MT-GLAZE	22 JA	1/16W
R444	301 224 9712	MT-GLAZE	22 JA	1/16W
R445	301 224 9712	MT-GLAZE	22 JA	1/16W
R4454	301 226 1516	MT-GLAZE	0.000 ZA	1/16W
R4455	301 226 1516	MT-GLAZE	0.000 ZA	1/16W
R4456	301 226 1516	MT-GLAZE	0.000 ZA	1/16W
R446	301 224 9712	MT-GLAZE	22 JA	1/16W
R4468	301 225 0213	MT-GLAZE	3.3K JA	1/16W
R4469	301 225 0213	MT-GLAZE	3.3K JA	1/16W
R447	301 224 9712	MT-GLAZE	22 JA	1/16W
R4471	301 224 9019	MT-GLAZE	10K JA	1/16W
R4472	301 224 9019	MT-GLAZE	10K JA	1/16W
R448	301 224 9019	MT-GLAZE	10K JA	1/16W
R449	301 224 9019	MT-GLAZE	10K JA	1/16W
R451	301 224 9019	MT-GLAZE	10K JA	1/16W
R461	301 226 1516	MT-GLAZE	0.000 ZA	1/16W
R462	301 226 1516	MT-GLAZE	0.000 ZA	1/16W
R463	301 226 1516	MT-GLAZE	0.000 ZA	1/16W
R466	301 226 1516	MT-GLAZE	0.000 ZA	1/16W
R4701	301 035 4111	MT-GLAZE	0.000 ZA	1/8W
R4702	301 224 8814	MT-GLAZE	100 JA	1/16W
R4703	301 224 8814	MT-GLAZE	100 JA	1/16W
R4711	301 226 1516	MT-GLAZE	0.000 ZA	1/16W
R4716	301 224 8814	MT-GLAZE	100 JA	1/16W
R4721	301 035 4111	MT-GLAZE	0.000 ZA	1/8W
R4722	301 035 4111	MT-GLAZE	0.000 ZA	1/8W
R4723	301 035 4111	MT-GLAZE	0.000 ZA	1/8W
R4728	301 226 1516	MT-GLAZE	0.000 ZA	1/16W
R4729	301 224 8814	MT-GLAZE	100 JA	1/16W
R4735	301 224 9514	MT-GLAZE	2.2K JA	1/16W
R4741	301 226 1516	MT-GLAZE	0.000 ZA	1/16W
R4748	301 225 1616	MT-GLAZE	390 JA	1/16W
R4749	301 225 1319	MT-GLAZE	470 JA	1/16W
R4750	301 225 1210	MT-GLAZE	4.7K JA	1/16W
R4756	301 226 1516	MT-GLAZE	0.000 ZA	1/16W
R4757	301 226 1516	MT-GLAZE	0.000 ZA	1/16W
R4758	301 225 1319	MT-GLAZE	470 JA	1/16W
R4763	301 226 1516	MT-GLAZE	0.000 ZA	1/16W
R4765	301 224 9019	MT-GLAZE	10K JA	1/16W
R4767	301 226 1516	MT-GLAZE	0.000 ZA	1/16W
R4768	301 224 9019	MT-GLAZE	10K JA	1/16W
R4771	301 224 8814	MT-GLAZE	100 JA	1/16W
R4773	301 226 1516	MT-GLAZE	0.000 ZA	1/16W
R4776	301 224 8814	MT-GLAZE	100 JA	1/16W
R4777	301 224 9514	MT-GLAZE	2.2K JA	1/16W
R4779	301 224 8913	MT-GLAZE	100K JA	1/16W
R4781	301 035 4111	MT-GLAZE	0.000 ZA	1/8W
R4782	301 035 4111	MT-GLAZE	0.000 ZA	1/8W
⚠ R4783	945 030 1057	PROTECTOR,IC 3.8A 72V		
R4784	301 035 4111	MT-GLAZE	0.000 ZA	1/8W
R4785	301 035 4111	MT-GLAZE	0.000 ZA	1/8W
R4786	301 035 4111	MT-GLAZE	0.000 ZA	1/8W
R4787	301 224 9316	MT-GLAZE	1K JA	1/16W
R4788	301 035 4111	MT-GLAZE	0.000 ZA	1/8W
⚠ R4789	945 030 1057	PROTECTOR,IC 3.8A 72V		
R4791	301 035 4111	MT-GLAZE	0.000 ZA	1/8W
R4792	301 035 4111	MT-GLAZE	0.000 ZA	1/8W
R4793	301 035 4111	MT-GLAZE	0.000 ZA	1/8W
R4794	301 035 4111	MT-GLAZE	0.000 ZA	1/8W
R4795	301 035 4111	MT-GLAZE	0.000 ZA	1/8W
R4796	301 224 9019	MT-GLAZE	10K JA	1/16W
R4797	301 224 9019	MT-GLAZE	10K JA	1/16W
R4798	301 224 9019	MT-GLAZE	10K JA	1/16W
R4799	301 225 0213	MT-GLAZE	3.3K JA	1/16W
R4801	301 226 1516	MT-GLAZE	0.000 ZA	1/16W
R4802	301 226 1516	MT-GLAZE	0.000 ZA	1/16W
R4803	301 226 1516	MT-GLAZE	0.000 ZA	1/16W
R4804	301 226 1516	MT-GLAZE	0.000 ZA	1/16W
R4805	301 226 1516	MT-GLAZE	0.000 ZA	1/16W
R4806	301 226 1516	MT-GLAZE	0.000 ZA	1/16W
R4807	301 226 1516	MT-GLAZE	0.000 ZA	1/16W
R481	301 226 1516	MT-GLAZE	0.000 ZA	1/16W
R4815	301 226 1516	MT-GLAZE	0.000 ZA	1/16W
R4817	301 224 9019	MT-GLAZE	10K JA	1/16W
R4818	301 224 9019	MT-GLAZE	10K JA	1/16W
R4819	301 224 9019	MT-GLAZE	10K JA	1/16W
R482	301 226 1516	MT-GLAZE	0.000 ZA	1/16W
R4821	301 226 1516	MT-GLAZE	0.000 ZA	1/16W
R4822	301 226 1516	MT-GLAZE	0.000 ZA	1/16W
R4823	301 226 1516	MT-GLAZE	0.000 ZA	1/16W
R4824	301 226 1516	MT-GLAZE	0.000 ZA	1/16W
R4825	301 226 1516	MT-GLAZE	0.000 ZA	1/16W
R4826	301 224 8814	MT-GLAZE	100 JA	1/16W
R4827	301 224 8814	MT-GLAZE	100 JA	1/16W
R4828	301 226 1516	MT-GLAZE	0.000 ZA	1/16W
R483	301 226 1516	MT-GLAZE	0.000 ZA	1/16W
R4834	301 226 1516	MT-GLAZE	0.000 ZA	1/16W
R4835	301 224 9019	MT-GLAZE	10K JA	1/16W
R4836	301 224 9019	MT-GLAZE	10K JA	1/16W
R4837	301 224 9019	MT-GLAZE	10K JA	1/16W
R4851	301 224 9316	MT-GLAZE	1K JA	1/16W
R4852	301 224 9316	MT-GLAZE	1K JA	1/16W
R4853	301 224 9019	MT-GLAZE	10K JA	1/16W
R4854	301 224 9019	MT-GLAZE	10K JA	1/16W
R4855	301 224 9316	MT-GLAZE	1K JA	1/16W
R4856	301 224 9019	MT-GLAZE	10K JA	1/16W
R4857	301 224 9316	MT-GLAZE	1K JA	1/16W
R4859	301 224 9019	MT-GLAZE	10K JA	1/16W
R486	301 224 9316	MT-GLAZE	1K JA	1/16W
R487	301 224 9316	MT-GLAZE	1K JA	1/16W
R4879	301 224 9316	MT-GLAZE	1K JA	1/16W
R4882	301 224 9019	MT-GLAZE	10K JA	1/16W
R4885	301 224 9316	MT-GLAZE	1K JA	1/16W
R4886	301 226 1516	MT-GLAZE	0.000 ZA	1/16W
R4887	301 224 9019	MT-GLAZE	10K JA	1/16W
R4888	301 224 9019	MT-GLAZE	10K JA	1/16W
R489	301 224 9316	MT-GLAZE	1K JA	1/16W
R4891	301 224 9019	MT-GLAZE	10K JA	1/16W
R4892	301 224 9019	MT-GLAZE	10K JA	1/16W

Electrical Parts List

Key No.	Part No.	Description		
R4893	301 225 0619	MT-GLAZE	5.6K JA	1/16W
R492	301 224 9316	MT-GLAZE	1K JA	1/16W
R495	301 224 9316	MT-GLAZE	1K JA	1/16W
R501	301 225 8110	MT-GLAZE	10 JA	1/16W
R502	301 226 1516	MT-GLAZE	0.000 ZA	1/16W
R503	301 226 1516	MT-GLAZE	0.000 ZA	1/16W
R504	301 226 1516	MT-GLAZE	0.000 ZA	1/16W
R505	301 224 9316	MT-GLAZE	1K JA	1/16W
R506	301 226 1516	MT-GLAZE	0.000 ZA	1/16W
R510	301 225 8110	MT-GLAZE	10 JA	1/16W
R511	301 226 1516	MT-GLAZE	0.000 ZA	1/16W
R512	301 224 9019	MT-GLAZE	10K JA	1/16W
R513	301 226 1516	MT-GLAZE	0.000 ZA	1/16W
R514	301 225 1814	MT-GLAZE	47 JA	1/16W
R5206	301 226 1516	MT-GLAZE	0.000 ZA	1/16W
R5207	301 226 1516	MT-GLAZE	0.000 ZA	1/16W
R5208	301 226 1516	MT-GLAZE	0.000 ZA	1/16W
R5209	301 226 1516	MT-GLAZE	0.000 ZA	1/16W
R5211	301 226 1516	MT-GLAZE	0.000 ZA	1/16W
R5212	301 226 1516	MT-GLAZE	0.000 ZA	1/16W
R5213	301 226 1516	MT-GLAZE	0.000 ZA	1/16W
R5215	301 224 8814	MT-GLAZE	100 JA	1/16W
R5216	301 224 8814	MT-GLAZE	100 JA	1/16W
R5217	301 224 9019	MT-GLAZE	10K JA	1/16W
R5218	301 226 1516	MT-GLAZE	0.000 ZA	1/16W
R5219	301 224 9019	MT-GLAZE	10K JA	1/16W
R5221	301 224 9019	MT-GLAZE	10K JA	1/16W
R5222	301 226 1516	MT-GLAZE	0.000 ZA	1/16W
R5223	301 225 0213	MT-GLAZE	3.3K JA	1/16W
R5224	301 226 1516	MT-GLAZE	0.000 ZA	1/16W
R5225	301 225 0213	MT-GLAZE	3.3K JA	1/16W
R5226	301 225 0213	MT-GLAZE	3.3K JA	1/16W
R5227	301 301 3718	MT-GLAZE	2K FA	1/16W
R5228	301 301 8416	MT-GLAZE	16K FA	1/16W
R5229	301 286 4717	MT-GLAZE	30K JA	1/16W
R5231	301 226 1516	MT-GLAZE	0.000 ZA	1/16W
R5232	301 226 1516	MT-GLAZE	0.000 ZA	1/16W
R5233	301 226 1516	MT-GLAZE	0.000 ZA	1/16W
R5234	301 226 1516	MT-GLAZE	0.000 ZA	1/16W
R5235	301 226 1516	MT-GLAZE	0.000 ZA	1/16W
R5238	301 225 8110	MT-GLAZE	10 JA	1/16W
R5239	301 225 8110	MT-GLAZE	10 JA	1/16W
R5241	301 225 8110	MT-GLAZE	10 JA	1/16W
R5242	301 225 8110	MT-GLAZE	10 JA	1/16W
R5243	301 225 8110	MT-GLAZE	10 JA	1/16W
R5245	301 301 8416	MT-GLAZE	16K FA	1/16W
R5246	301 225 8110	MT-GLAZE	10 JA	1/16W
R5247	301 225 8110	MT-GLAZE	10 JA	1/16W
R5248	301 226 1516	MT-GLAZE	0.000 ZA	1/16W
R5249	301 226 1516	MT-GLAZE	0.000 ZA	1/16W
R5252	301 301 3718	MT-GLAZE	2K FA	1/16W
R5254	301 286 4717	MT-GLAZE	30K JA	1/16W
R531	301 225 8110	MT-GLAZE	10 JA	1/16W
R532	301 226 1516	MT-GLAZE	0.000 ZA	1/16W
R533	301 226 1516	MT-GLAZE	0.000 ZA	1/16W
R534	301 226 1516	MT-GLAZE	0.000 ZA	1/16W
R535	301 224 9316	MT-GLAZE	1K JA	1/16W
R538	301 226 1516	MT-GLAZE	0.000 ZA	1/16W
R540	301 225 8110	MT-GLAZE	10 JA	1/16W
R541	301 226 1516	MT-GLAZE	0.000 ZA	1/16W
R542	301 224 9019	MT-GLAZE	10K JA	1/16W
R543	301 226 1516	MT-GLAZE	0.000 ZA	1/16W
R544	301 225 8110	MT-GLAZE	10 JA	1/16W
R5501	301 224 9019	MT-GLAZE	10K JA	1/16W
R5502	301 226 1516	MT-GLAZE	0.000 ZA	1/16W
R5503	301 224 9019	MT-GLAZE	10K JA	1/16W
R5505	301 224 8814	MT-GLAZE	100 JA	1/16W

Key No.	Part No.	Description		
R5511	301 263 6928	MT-GLAZE	2K JA	1/16W
R5512	301 225 3818	MT-GLAZE	1.5K JA	1/16W
R5513	301 225 0619	MT-GLAZE	5.6K JA	1/16W
R5514	301 224 9019	MT-GLAZE	10K JA	1/16W
R561	301 225 8110	MT-GLAZE	10 JA	1/16W
R562	301 226 1516	MT-GLAZE	0.000 ZA	1/16W
R563	301 226 1516	MT-GLAZE	0.000 ZA	1/16W
R564	301 226 1516	MT-GLAZE	0.000 ZA	1/16W
R565	301 224 9316	MT-GLAZE	1K JA	1/16W
R5651	301 225 0619	MT-GLAZE	5.6K JA	1/16W
R5652	301 225 3818	MT-GLAZE	1.5K JA	1/16W
R5653	301 263 6928	MT-GLAZE	2K JA	1/16W
R5661	301 301 3718	MT-GLAZE	2K FA	1/16W
R5662	301 301 8416	MT-GLAZE	16K FA	1/16W
R5663	301 286 4717	MT-GLAZE	30K JA	1/16W
R5664	301 225 1715	MT-GLAZE	39K JA	1/16W
R5665	301 294 3115	MT-GLAZE	1K FA	1/16W
R5666	301 287 2227	MT-GLAZE	22K FA	1/16W
R5667	301 294 3016	MT-GLAZE	10K FA	1/16W
R567	301 226 1516	MT-GLAZE	0.000 ZA	1/16W
R5671	301 301 3718	MT-GLAZE	2K FA	1/16W
R5672	301 301 8416	MT-GLAZE	16K FA	1/16W
R5673	301 286 4717	MT-GLAZE	30K JA	1/16W
R5674	301 225 1715	MT-GLAZE	39K JA	1/16W
R5675	301 263 6928	MT-GLAZE	2K JA	1/16W
R5676	301 299 4810	MT-GLAZE	2.7K FA	1/16W
R5677	401 342 9318	MT-GLAZE	360 FA	1/16W
R5678	301 294 3016	MT-GLAZE	10K FA	1/16W
R5679	301 224 9316	MT-GLAZE	1K JA	1/16W
R5681	301 226 1516	MT-GLAZE	0.000 ZA	1/16W
R5682	301 284 3326	MT-GLAZE	3K FA	1/16W
R5683	301 299 5312	MT-GLAZE	12K FA	1/16W
R5684	301 294 3016	MT-GLAZE	10K FA	1/16W
R5685	301 225 1715	MT-GLAZE	39K JA	1/16W
R5686	301 284 3326	MT-GLAZE	3K FA	1/16W
R5687	301 299 5312	MT-GLAZE	12K FA	1/16W
R5688	301 294 3016	MT-GLAZE	10K FA	1/16W
R5689	301 226 1516	MT-GLAZE	0.000 ZA	1/16W
R569	301 226 1516	MT-GLAZE	0.000 ZA	1/16W
R570	301 225 8110	MT-GLAZE	10 JA	1/16W
R5701	301 035 4111	MT-GLAZE	0.000 ZA	1/8W
R5702	301 226 1516	MT-GLAZE	0.000 ZA	1/16W
R5703	301 226 1516	MT-GLAZE	0.000 ZA	1/16W
R5704	301 226 1516	MT-GLAZE	0.000 ZA	1/16W
R5705	301 224 9019	MT-GLAZE	10K JA	1/16W
R5706	301 224 9019	MT-GLAZE	10K JA	1/16W
R5707	301 226 1516	MT-GLAZE	0.000 ZA	1/16W
R571	301 226 1516	MT-GLAZE	0.000 ZA	1/16W
R5711	301 224 8814	MT-GLAZE	100 JA	1/16W
R5712	301 035 4111	MT-GLAZE	0.000 ZA	1/8W
R5714	301 035 4111	MT-GLAZE	0.000 ZA	1/8W
R572	301 224 9019	MT-GLAZE	10K JA	1/16W
R5721	301 226 1516	MT-GLAZE	0.000 ZA	1/16W
R5722	645 053 2177	IMPEDANCE,600 OHM P		
R5723	301 226 1516	MT-GLAZE	0.000 ZA	1/16W
R5724	301 226 1516	MT-GLAZE	0.000 ZA	1/16W
R5725	301 226 1516	MT-GLAZE	0.000 ZA	1/16W
R5726	301 035 4111	MT-GLAZE	0.000 ZA	1/8W
R5727	301 035 4111	MT-GLAZE	0.000 ZA	1/8W
R5728	301 035 4111	MT-GLAZE	0.000 ZA	1/8W
R5729	301 035 4111	MT-GLAZE	0.000 ZA	1/8W
R573	301 226 1516	MT-GLAZE	0.000 ZA	1/16W
R5734	301 226 1516	MT-GLAZE	0.000 ZA	1/16W
R5735	301 226 1516	MT-GLAZE	0.000 ZA	1/16W
R5736	301 226 1516	MT-GLAZE	0.000 ZA	1/16W
R5737	301 226 1516	MT-GLAZE	0.000 ZA	1/16W
R5738	301 224 9316	MT-GLAZE	1K JA	1/16W

Electrical Parts List

Key No.	Part No.	Description		
R5739	301 226 1516	MT-GLAZE	0.000 ZA	1/16W
R574	301 225 1814	MT-GLAZE	47 JA	1/16W
R5741	301 226 1516	MT-GLAZE	0.000 ZA	1/16W
R5742	301 150 6014	MT-GLAZE	0.000 ZA	1/10W
R5751	301 224 9019	MT-GLAZE	10K JA	1/16W
R5752	301 226 1516	MT-GLAZE	0.000 ZA	1/16W
R5756	301 226 1516	MT-GLAZE	0.000 ZA	1/16W
R5758	301 226 1516	MT-GLAZE	0.000 ZA	1/16W
R5759	301 225 1210	MT-GLAZE	4.7K JA	1/16W
R5761	301 224 9019	MT-GLAZE	10K JA	1/16W
R5762	301 226 1516	MT-GLAZE	0.000 ZA	1/16W
R5781	301 226 1516	MT-GLAZE	0.000 ZA	1/16W
R5782	301 225 0817	MT-GLAZE	68K JA	1/16W
R5784	301 226 1516	MT-GLAZE	0.000 ZA	1/16W
R5785	301 226 1516	MT-GLAZE	0.000 ZA	1/16W
R5787	301 224 9316	MT-GLAZE	1K JA	1/16W
R5788	301 226 1516	MT-GLAZE	0.000 ZA	1/16W
R5789	301 301 3817	MT-GLAZE	820 FA	1/16W
R5800	301 224 8814	MT-GLAZE	100 JA	1/16W
R5801	301 259 7823	MT-GLAZE	20K JA	1/16W
R5802	301 259 7823	MT-GLAZE	20K JA	1/16W
R5803	301 259 7823	MT-GLAZE	20K JA	1/16W
R5804	301 224 9316	MT-GLAZE	1K JA	1/16W
R5805	301 224 9316	MT-GLAZE	1K JA	1/16W
R5806	301 224 9316	MT-GLAZE	1K JA	1/16W
R5807	301 225 0213	MT-GLAZE	3.3K JA	1/16W
R5808	301 225 8110	MT-GLAZE	10 JA	1/16W
R5809	301 225 8110	MT-GLAZE	10 JA	1/16W
R5811	301 226 1516	MT-GLAZE	0.000 ZA	1/16W
R5812	301 224 9316	MT-GLAZE	1K JA	1/16W
R5813	301 226 1516	MT-GLAZE	0.000 ZA	1/16W
R5814	301 226 1516	MT-GLAZE	0.000 ZA	1/16W
R5815	301 226 1516	MT-GLAZE	0.000 ZA	1/16W
R5816	301 226 1516	MT-GLAZE	0.000 ZA	1/16W
R5817	301 226 1516	MT-GLAZE	0.000 ZA	1/16W
R5818	301 226 1516	MT-GLAZE	0.000 ZA	1/16W
R5819	301 226 1516	MT-GLAZE	0.000 ZA	1/16W
R5821	301 226 1516	MT-GLAZE	0.000 ZA	1/16W
R5822	301 226 1516	MT-GLAZE	0.000 ZA	1/16W
R5823	301 226 1516	MT-GLAZE	0.000 ZA	1/16W
R5824	301 226 1516	MT-GLAZE	0.000 ZA	1/16W
R5825	301 226 1516	MT-GLAZE	0.000 ZA	1/16W
R5826	301 226 1516	MT-GLAZE	0.000 ZA	1/16W
R5827	301 224 9712	MT-GLAZE	22 JA	1/16W
R5828	301 226 1516	MT-GLAZE	0.000 ZA	1/16W
R5829	301 226 1516	MT-GLAZE	0.000 ZA	1/16W
R583	301 035 4111	MT-GLAZE	0.000 ZA	1/8W
R5830	301 225 8011	MT-GLAZE	330 JA	1/16W
R5831	301 226 1516	MT-GLAZE	0.000 ZA	1/16W
R5832	301 226 1516	MT-GLAZE	0.000 ZA	1/16W
R5834	301 226 1516	MT-GLAZE	0.000 ZA	1/16W
R5835	301 226 1516	MT-GLAZE	0.000 ZA	1/16W
R5837	301 226 1516	MT-GLAZE	0.000 ZA	1/16W
R5838	301 224 9316	MT-GLAZE	1K JA	1/16W
R5839	301 226 1516	MT-GLAZE	0.000 ZA	1/16W
R5841	301 224 9712	MT-GLAZE	22 JA	1/16W
R5842	301 226 1516	MT-GLAZE	0.000 ZA	1/16W
R5843	301 226 1516	MT-GLAZE	0.000 ZA	1/16W
R5844	301 226 1516	MT-GLAZE	0.000 ZA	1/16W
R5845	301 224 9019	MT-GLAZE	10K JA	1/16W
R5846	301 224 9514	MT-GLAZE	2.2K JA	1/16W
R5847	301 225 0213	MT-GLAZE	3.3K JA	1/16W
R5848	301 226 1516	MT-GLAZE	0.000 ZA	1/16W
R5849	301 226 1516	MT-GLAZE	0.000 ZA	1/16W
R5850	301 224 9019	MT-GLAZE	10K JA	1/16W
R5851	301 225 0213	MT-GLAZE	3.3K JA	1/16W
R5852	301 225 0213	MT-GLAZE	3.3K JA	1/16W
R5853	301 226 1516	MT-GLAZE	0.000 ZA	1/16W
R5854	301 224 9019	MT-GLAZE	10K JA	1/16W
R5855	301 226 1516	MT-GLAZE	0.000 ZA	1/16W
R5856	301 226 1516	MT-GLAZE	0.000 ZA	1/16W
R5857	301 224 9019	MT-GLAZE	10K JA	1/16W
R5858	301 226 1516	MT-GLAZE	0.000 ZA	1/16W
R5859	301 226 1516	MT-GLAZE	0.000 ZA	1/16W
R586	301 035 4111	MT-GLAZE	0.000 ZA	1/8W
R5860	301 224 9019	MT-GLAZE	10K JA	1/16W
R5861	301 226 1516	MT-GLAZE	0.000 ZA	1/16W
R5862	301 226 1516	MT-GLAZE	0.000 ZA	1/16W
R5864	301 224 9019	MT-GLAZE	10K JA	1/16W
R5865	301 224 9019	MT-GLAZE	10K JA	1/16W
R5866	301 224 9019	MT-GLAZE	10K JA	1/16W
R5867	301 224 9019	MT-GLAZE	10K JA	1/16W
R5868	301 224 9514	MT-GLAZE	2.2K JA	1/16W
R5869	301 224 9316	MT-GLAZE	1K JA	1/16W
R5870	301 224 9019	MT-GLAZE	10K JA	1/16W
R5871	301 224 9019	MT-GLAZE	10K JA	1/16W
R5872	301 224 9514	MT-GLAZE	2.2K JA	1/16W
R5873	301 237 2915	MT-GLAZE	51 JA	1/16W
R5874	301 224 9316	MT-GLAZE	1K JA	1/16W
R5875	301 224 9712	MT-GLAZE	22 JA	1/16W
R5876	301 224 9712	MT-GLAZE	22 JA	1/16W
R5877	301 226 1516	MT-GLAZE	0.000 ZA	1/16W
R5878	301 226 1516	MT-GLAZE	0.000 ZA	1/16W
R5879	301 226 1516	MT-GLAZE	0.000 ZA	1/16W
R5880	301 225 8110	MT-GLAZE	10 JA	1/16W
R5881	301 224 9019	MT-GLAZE	10K JA	1/16W
R5882	301 224 9019	MT-GLAZE	10K JA	1/16W
R5883	301 226 1516	MT-GLAZE	0.000 ZA	1/16W
R5884	301 226 1516	MT-GLAZE	0.000 ZA	1/16W
R5885	301 226 1516	MT-GLAZE	0.000 ZA	1/16W
R5886	301 237 2915	MT-GLAZE	51 JA	1/16W
R5887	301 224 9514	MT-GLAZE	2.2K JA	1/16W
R5888	301 224 9019	MT-GLAZE	10K JA	1/16W
R5889	301 224 9514	MT-GLAZE	2.2K JA	1/16W
R5890	301 225 8110	MT-GLAZE	10 JA	1/16W
R5891	301 226 1516	MT-GLAZE	0.000 ZA	1/16W
R5892	301 226 1516	MT-GLAZE	0.000 ZA	1/16W
R5893	301 224 9712	MT-GLAZE	22 JA	1/16W
R5895	301 224 9316	MT-GLAZE	1K JA	1/16W
R5896	301 226 1516	MT-GLAZE	0.000 ZA	1/16W
R5897	301 224 8814	MT-GLAZE	100 JA	1/16W
R5898	301 226 1516	MT-GLAZE	0.000 ZA	1/16W
R5899	301 226 1516	MT-GLAZE	0.000 ZA	1/16W
R5901	301 224 9316	MT-GLAZE	1K JA	1/16W
R5902	301 225 8110	MT-GLAZE	10 JA	1/16W
R5903	301 224 9316	MT-GLAZE	1K JA	1/16W
R5904	301 225 8110	MT-GLAZE	10 JA	1/16W
R5905	301 224 9316	MT-GLAZE	1K JA	1/16W
R5906	301 224 9316	MT-GLAZE	1K JA	1/16W
R5907	301 224 9316	MT-GLAZE	1K JA	1/16W
R5908	301 224 9316	MT-GLAZE	1K JA	1/16W
R5909	301 224 9316	MT-GLAZE	1K JA	1/16W
R591	401 343 0512	MT-GLAZE	7.5K FA	1/16W
R5910	301 224 9712	MT-GLAZE	22 JA	1/16W
R5911	301 224 9316	MT-GLAZE	1K JA	1/16W
R5912	301 224 9019	MT-GLAZE	10K JA	1/16W
R5913	301 224 9019	MT-GLAZE	10K JA	1/16W
R5914	301 224 9316	MT-GLAZE	1K JA	1/16W
R5915	301 224 9316	MT-GLAZE	1K JA	1/16W
R5916	301 301 3510	MT-GLAZE	200 JA	1/16W
R5918	301 224 9316	MT-GLAZE	1K JA	1/16W
R5919	301 263 7420	MT-GLAZE	75 JA	1/16W
R592	301 294 2811	MT-GLAZE	2.2K FA	1/16W
R5921	301 263 7420	MT-GLAZE	75 JA	1/16W

Electrical Parts List

Key No.	Part No.	Description		
R5923	301 225 1814	MT-GLAZE	47 JA	1/16W
R5924	301 225 1814	MT-GLAZE	47 JA	1/16W
R593	301 301 3718	MT-GLAZE	2K FA	1/16W
R594	301 224 8814	MT-GLAZE	100 JA	1/16W
R6201	301 225 0213	MT-GLAZE	3.3K JA	1/16W
R6202	301 224 9019	MT-GLAZE	10K JA	1/16W
R6203	301 226 1516	MT-GLAZE	0.000 ZA	1/16W
R6204	301 226 1516	MT-GLAZE	0.000 ZA	1/16W
R6205	301 226 1516	MT-GLAZE	0.000 ZA	1/16W
R6206	301 226 1516	MT-GLAZE	0.000 ZA	1/16W
R6207	301 226 1516	MT-GLAZE	0.000 ZA	1/16W
R6208	301 226 1516	MT-GLAZE	0.000 ZA	1/16W
R6209	301 226 1516	MT-GLAZE	0.000 ZA	1/16W
R6211	301 226 1516	MT-GLAZE	0.000 ZA	1/16W
R6212	301 226 1516	MT-GLAZE	0.000 ZA	1/16W
R6213	301 224 9019	MT-GLAZE	10K JA	1/16W
R6214	301 224 9019	MT-GLAZE	10K JA	1/16W
R6215	301 226 1516	MT-GLAZE	0.000 ZA	1/16W
R6216	301 225 0213	MT-GLAZE	3.3K JA	1/16W
R6219	301 224 9019	MT-GLAZE	10K JA	1/16W
R6221	301 224 9019	MT-GLAZE	10K JA	1/16W
R6223	301 225 8110	MT-GLAZE	10 JA	1/16W
R6224	301 225 0213	MT-GLAZE	3.3K JA	1/16W
R6225	301 225 0213	MT-GLAZE	3.3K JA	1/16W
R6226	301 226 1516	MT-GLAZE	0.000 ZA	1/16W
R6227	301 224 9019	MT-GLAZE	10K JA	1/16W
R6229	301 226 1516	MT-GLAZE	0.000 ZA	1/16W
R6231	301 226 1516	MT-GLAZE	0.000 ZA	1/16W
R6232	301 224 9019	MT-GLAZE	10K JA	1/16W
R6233	301 225 0213	MT-GLAZE	3.3K JA	1/16W
R6235	301 225 0213	MT-GLAZE	3.3K JA	1/16W
R6237	301 225 0213	MT-GLAZE	3.3K JA	1/16W
R6238	301 225 0213	MT-GLAZE	3.3K JA	1/16W
R6239	301 225 0213	MT-GLAZE	3.3K JA	1/16W
R6241	301 225 0213	MT-GLAZE	3.3K JA	1/16W
R6242	301 225 0213	MT-GLAZE	3.3K JA	1/16W
R6245	301 225 0213	MT-GLAZE	3.3K JA	1/16W
R6246	301 225 0213	MT-GLAZE	3.3K JA	1/16W
R6247	301 224 9712	MT-GLAZE	22 JA	1/16W
R6248	301 224 9019	MT-GLAZE	10K JA	1/16W
R6249	301 224 9019	MT-GLAZE	10K JA	1/16W
R6250	301 225 0213	MT-GLAZE	3.3K JA	1/16W
R6251	301 225 0213	MT-GLAZE	3.3K JA	1/16W
R6252	301 225 0213	MT-GLAZE	3.3K JA	1/16W
R6253	301 224 9019	MT-GLAZE	10K JA	1/16W
R6254	301 225 0213	MT-GLAZE	3.3K JA	1/16W
R6255	301 225 0213	MT-GLAZE	3.3K JA	1/16W
R6256	301 226 1516	MT-GLAZE	0.000 ZA	1/16W
R6257	301 226 1516	MT-GLAZE	0.000 ZA	1/16W
R6258	301 225 8110	MT-GLAZE	10 JA	1/16W
R6259	301 226 1516	MT-GLAZE	0.000 ZA	1/16W
R6262	301 226 1516	MT-GLAZE	0.000 ZA	1/16W
R6264	301 226 1516	MT-GLAZE	0.000 ZA	1/16W
R6265	301 224 9316	MT-GLAZE	1K JA	1/16W
R6266	301 224 9316	MT-GLAZE	1K JA	1/16W
R6268	301 226 1516	MT-GLAZE	0.000 ZA	1/16W
R6700	301 224 9019	MT-GLAZE	10K JA	1/16W
R6701	301 224 9316	MT-GLAZE	1K JA	1/16W
R6702	301 224 9316	MT-GLAZE	1K JA	1/16W
R6703	301 224 9019	MT-GLAZE	10K JA	1/16W
R6704	301 226 1516	MT-GLAZE	0.000 ZA	1/16W
R6705	301 226 1516	MT-GLAZE	0.000 ZA	1/16W
R6706	301 226 1516	MT-GLAZE	0.000 ZA	1/16W
R6707	301 224 9316	MT-GLAZE	1K JA	1/16W
R6708	301 224 9316	MT-GLAZE	1K JA	1/16W
R6709	301 224 9316	MT-GLAZE	1K JA	1/16W
R6710	301 224 9316	MT-GLAZE	1K JA	1/16W

Key No.	Part No.	Description		
R6712	301 226 5415	MT-GLAZE	56 JA	1/16W
R7301	301 224 9712	MT-GLAZE	22 JA	1/16W
R73011	301 224 9712	MT-GLAZE	22 JA	1/16W
R7302	301 224 9712	MT-GLAZE	22 JA	1/16W
R7303	301 224 9712	MT-GLAZE	22 JA	1/16W
R7304	301 224 9712	MT-GLAZE	22 JA	1/16W
R7305	301 224 9712	MT-GLAZE	22 JA	1/16W
R7307	301 224 9712	MT-GLAZE	22 JA	1/16W
R7308	301 224 9712	MT-GLAZE	22 JA	1/16W
R7309	301 224 9712	MT-GLAZE	22 JA	1/16W
R7312	301 224 9712	MT-GLAZE	22 JA	1/16W
R7313	301 224 9712	MT-GLAZE	22 JA	1/16W
R7314	301 224 9712	MT-GLAZE	22 JA	1/16W
R7721	301 276 0415	MT-GLAZE	10M JA	1/16W
R7722	301 237 2915	MT-GLAZE	51 JA	1/16W
R7723	301 225 0114	MT-GLAZE	27K JA	1/16W
R7724	301 224 9019	MT-GLAZE	10K JA	1/16W
R7725	301 224 9019	MT-GLAZE	10K JA	1/16W
R7726	301 225 0114	MT-GLAZE	27K JA	1/16W
R7727	301 224 9514	MT-GLAZE	2.2K JA	1/16W
R7728	301 224 9910	MT-GLAZE	22K JA	1/16W
R7731	301 224 9019	MT-GLAZE	10K JA	1/16W
R7732	301 224 9019	MT-GLAZE	10K JA	1/16W
R7733	301 224 9316	MT-GLAZE	1K JA	1/16W
R7734	301 224 9217	MT-GLAZE	15K JA	1/16W
R7735	301 225 2118	MT-GLAZE	12K JA	1/16W
R7737	301 224 9019	MT-GLAZE	10K JA	1/16W
R7738	301 224 9316	MT-GLAZE	1K JA	1/16W
R7739	301 225 2118	MT-GLAZE	12K JA	1/16W
R7781	301 234 9917	MT-GLAZE	6.8K JA	1/16W
R7784	301 224 9316	MT-GLAZE	1K JA	1/16W
R7785	301 225 0114	MT-GLAZE	27K JA	1/16W
R7788	301 225 0114	MT-GLAZE	27K JA	1/16W
R7789	301 224 9019	MT-GLAZE	10K JA	1/16W
R7792	301 224 9019	MT-GLAZE	10K JA	1/16W
R7801	301 226 1516	MT-GLAZE	0.000 ZA	1/16W
R7802	301 224 9316	MT-GLAZE	1K JA	1/16W
R7804	301 224 9316	MT-GLAZE	1K JA	1/16W
R7805	301 290 1511	MT-GLAZE	0.1 JE	1/2W
R7806	301 224 9613	MT-GLAZE	2.7K JA	1/16W
R7807	301 234 9917	MT-GLAZE	6.8K JA	1/16W
R7808	301 263 6928	MT-GLAZE	2K JA	1/16W
R7811	301 226 1516	MT-GLAZE	0.000 ZA	1/16W
R7812	301 224 9316	MT-GLAZE	1K JA	1/16W
R7814	301 224 9316	MT-GLAZE	1K JA	1/16W
R7815	301 290 1511	MT-GLAZE	0.1 JE	1/2W
R7816	301 224 9613	MT-GLAZE	2.7K JA	1/16W
R7817	301 234 9917	MT-GLAZE	6.8K JA	1/16W
R7818	301 263 6928	MT-GLAZE	2K JA	1/16W
R7841	301 225 8110	MT-GLAZE	10 JA	1/16W
R7842	301 225 8110	MT-GLAZE	10 JA	1/16W
R7843	301 226 1516	MT-GLAZE	0.000 ZA	1/16W
R7844	301 226 1516	MT-GLAZE	0.000 ZA	1/16W
R7845	301 226 1516	MT-GLAZE	0.000 ZA	1/16W
R7852	301 224 8814	MT-GLAZE	100 JA	1/16W
R7853	301 224 8814	MT-GLAZE	100 JA	1/16W
R7854	301 224 8814	MT-GLAZE	100 JA	1/16W
R7856	301 035 4111	MT-GLAZE	0.000 ZA	1/8W
R7857	301 224 9019	MT-GLAZE	10K JA	1/16W
R7858	301 224 9019	MT-GLAZE	10K JA	1/16W
R7859	301 224 9019	MT-GLAZE	10K JA	1/16W
R7866	301 224 9019	MT-GLAZE	10K JA	1/16W
R7868	301 224 9019	MT-GLAZE	10K JA	1/16W
R7870	301 226 1516	MT-GLAZE	0.000 ZA	1/16W
R7874	301 224 9019	MT-GLAZE	10K JA	1/16W
R7875	301 224 9514	MT-GLAZE	2.2K JA	1/16W
R7876	301 284 3613	MT-GLAZE	16K JA	1/16W

Electrical Parts List

Key No.	Part No.	Description		
R7877	301 225 0510	MT-GLAZE	33K JA	1/16W
R7878	301 224 9514	MT-GLAZE	2.2K JA	1/16W
R7879	301 284 3613	MT-GLAZE	16K JA	1/16W
R7881	301 225 0510	MT-GLAZE	33K JA	1/16W
R7882	301 224 9019	MT-GLAZE	10K JA	1/16W
R7883	301 224 8814	MT-GLAZE	100 JA	1/16W
R7903	301 035 4111	MT-GLAZE	0.000 ZA	1/8W
R7904	301 226 1516	MT-GLAZE	0.000 ZA	1/16W
R801	301 226 1516	MT-GLAZE	0.000 ZA	1/16W
R802	301 224 8814	MT-GLAZE	100 JA	1/16W
R804	301 226 1516	MT-GLAZE	0.000 ZA	1/16W
R806	301 226 1516	MT-GLAZE	0.000 ZA	1/16W
R807	301 226 1516	MT-GLAZE	0.000 ZA	1/16W
R808	301 224 9019	MT-GLAZE	10K JA	1/16W
R809	301 224 9019	MT-GLAZE	10K JA	1/16W
R810	301 224 9019	MT-GLAZE	10K JA	1/16W
R811	301 226 1516	MT-GLAZE	0.000 ZA	1/16W
R812	301 224 9019	MT-GLAZE	10K JA	1/16W
R813	301 224 8814	MT-GLAZE	100 JA	1/16W
R814	301 224 9019	MT-GLAZE	10K JA	1/16W
R815	301 225 1913	MT-GLAZE	68 JA	1/16W
R816	301 225 1913	MT-GLAZE	68 JA	1/16W
R817	301 225 1913	MT-GLAZE	68 JA	1/16W
R818	301 225 1913	MT-GLAZE	68 JA	1/16W
R819	301 225 1913	MT-GLAZE	68 JA	1/16W
R820	301 226 1516	MT-GLAZE	0.000 ZA	1/16W
R821	301 226 1516	MT-GLAZE	0.000 ZA	1/16W
R822	301 225 1210	MT-GLAZE	4.7K JA	1/16W
R8224	301 224 9316	MT-GLAZE	1K JA	1/16W
R8225	301 225 8110	MT-GLAZE	10 JA	1/16W
R8226	301 226 1516	MT-GLAZE	0.000 ZA	1/16W
R8227	301 226 1516	MT-GLAZE	0.000 ZA	1/16W
R8229	301 226 1516	MT-GLAZE	0.000 ZA	1/16W
R823	301 226 1516	MT-GLAZE	0.000 ZA	1/16W
R8231	301 226 1516	MT-GLAZE	0.000 ZA	1/16W
R824	301 226 1516	MT-GLAZE	0.000 ZA	1/16W
R825	301 225 7915	MT-GLAZE	220 JA	1/16W
R826	301 225 7915	MT-GLAZE	220 JA	1/16W
R827	301 226 1516	MT-GLAZE	0.000 ZA	1/16W
R828	301 226 1516	MT-GLAZE	0.000 ZA	1/16W
R829	301 226 1516	MT-GLAZE	0.000 ZA	1/16W
R830	301 224 9316	MT-GLAZE	1K JA	1/16W
R831	301 224 9019	MT-GLAZE	10K JA	1/16W
R832	301 225 8011	MT-GLAZE	330 JA	1/16W
R833	301 226 1516	MT-GLAZE	0.000 ZA	1/16W
R834	301 224 9019	MT-GLAZE	10K JA	1/16W
R836	301 224 9316	MT-GLAZE	1K JA	1/16W
R838	301 224 9316	MT-GLAZE	1K JA	1/16W
R841	301 224 9316	MT-GLAZE	1K JA	1/16W
R842	301 224 9019	MT-GLAZE	10K JA	1/16W
R843	301 224 9019	MT-GLAZE	10K JA	1/16W
R844	301 224 9019	MT-GLAZE	10K JA	1/16W
R845	301 226 1516	MT-GLAZE	0.000 ZA	1/16W
R847	301 226 1516	MT-GLAZE	0.000 ZA	1/16W
R848	301 224 9019	MT-GLAZE	10K JA	1/16W
R849	301 226 1516	MT-GLAZE	0.000 ZA	1/16W
R851	301 225 1210	MT-GLAZE	4.7K JA	1/16W
R854	301 226 1516	MT-GLAZE	0.000 ZA	1/16W
R855	301 226 1516	MT-GLAZE	0.000 ZA	1/16W
R857	301 226 1516	MT-GLAZE	0.000 ZA	1/16W
R858	301 226 1516	MT-GLAZE	0.000 ZA	1/16W
R859	301 226 1516	MT-GLAZE	0.000 ZA	1/16W
R861	301 226 1516	MT-GLAZE	0.000 ZA	1/16W
R862	301 226 1516	MT-GLAZE	0.000 ZA	1/16W
R863	301 226 1516	MT-GLAZE	0.000 ZA	1/16W
R864	301 226 1516	MT-GLAZE	0.000 ZA	1/16W
R865	301 226 1516	MT-GLAZE	0.000 ZA	1/16W
R867	301 224 9019	MT-GLAZE	10K JA	1/16W
R871	301 226 1516	MT-GLAZE	0.000 ZA	1/16W
R872	301 226 1516	MT-GLAZE	0.000 ZA	1/16W
R874	301 226 1516	MT-GLAZE	0.000 ZA	1/16W
R875	301 226 1516	MT-GLAZE	0.000 ZA	1/16W
R876	301 224 9415	MT-GLAZE	1M JA	1/16W
R877	301 226 1516	MT-GLAZE	0.000 ZA	1/16W
R878	301 225 1814	MT-GLAZE	47 JA	1/16W
R879	301 226 1516	MT-GLAZE	0.000 ZA	1/16W
R880	301 224 9316	MT-GLAZE	1K JA	1/16W
R881	301 224 9019	MT-GLAZE	10K JA	1/16W
R883	301 224 9019	MT-GLAZE	10K JA	1/16W
R884	301 224 9316	MT-GLAZE	1K JA	1/16W
R885	301 225 0312	MT-GLAZE	33 JA	1/16W
R887	301 224 9019	MT-GLAZE	10K JA	1/16W
R888	301 224 9019	MT-GLAZE	10K JA	1/16W
R8881	301 298 5818	MT-GLAZE	9.1K FA	1/16W
R8882	301 294 2910	MT-GLAZE	560 FA	1/16W
R8883	301 338 8113	MT-GLAZE	1.2K FA	1/16W
R8884	301 294 3115	MT-GLAZE	1K FA	1/16W
R8885	401 361 3618	MT-GLAZE	3.3M FA	1/16W
R8888	401 361 3618	MT-GLAZE	3.3M FA	1/16W
R889	301 224 9019	MT-GLAZE	10K JA	1/16W
R8891	301 294 3214	MT-GLAZE	47K FA	1/16W
R8892	301 299 5114	MT-GLAZE	6.2K FA	1/16W
R8893	301 294 3214	MT-GLAZE	47K FA	1/16W
R8894	301 299 5114	MT-GLAZE	6.2K FA	1/16W
R890	301 224 9316	MT-GLAZE	1K JA	1/16W
R891	301 224 9019	MT-GLAZE	10K JA	1/16W
R892	301 226 1516	MT-GLAZE	0.000 ZA	1/16W
R893	301 224 9019	MT-GLAZE	10K JA	1/16W
R894	301 224 8814	MT-GLAZE	100 JA	1/16W
R895	301 224 8814	MT-GLAZE	100 JA	1/16W
R896	301 224 8814	MT-GLAZE	100 JA	1/16W
R897	301 224 8814	MT-GLAZE	100 JA	1/16W
R898	301 224 8814	MT-GLAZE	100 JA	1/16W
R899	301 224 8814	MT-GLAZE	100 JA	1/16W
R9801	301 224 8913	MT-GLAZE	100K JA	1/16W
R9802	301 225 1111	MT-GLAZE	27 JA	1/16W
R9803	301 225 1111	MT-GLAZE	27 JA	1/16W
R9804	301 224 8913	MT-GLAZE	100K JA	1/16W
R9805	301 225 3818	MT-GLAZE	1.5K JA	1/16W
R9806	301 224 9415	MT-GLAZE	1M JA	1/16W
R9807	301 225 8615	MT-GLAZE	560K JA	1/16W
R9828	301 224 9019	MT-GLAZE	10K JA	1/16W
R9829	301 224 9316	MT-GLAZE	1K JA	1/16W
R9831	301 224 9019	MT-GLAZE	10K JA	1/16W
R9868	301 224 9019	MT-GLAZE	10K JA	1/16W
R9869	301 224 9019	MT-GLAZE	10K JA	1/16W
R9872	301 226 1516	MT-GLAZE	0.000 ZA	1/16W
R9873	301 226 1516	MT-GLAZE	0.000 ZA	1/16W
R9874	301 224 9019	MT-GLAZE	10K JA	1/16W
R9875	301 224 9019	MT-GLAZE	10K JA	1/16W
R9876	301 226 1516	MT-GLAZE	0.000 ZA	1/16W
R9877	301 226 1516	MT-GLAZE	0.000 ZA	1/16W
R9878	301 328 3913	MT-GLAZE	36K FA	1/16W
R9879	301 328 3913	MT-GLAZE	36K FA	1/16W
R9880	301 226 1516	MT-GLAZE	0.000 ZA	1/16W
R9881	301 226 1516	MT-GLAZE	0.000 ZA	1/16W
R9882	301 224 8913	MT-GLAZE	100K JA	1/16W
R9883	301 224 8913	MT-GLAZE	100K JA	1/16W
R9884	301 224 9910	MT-GLAZE	22K JA	1/16W
R9885	301 224 9019	MT-GLAZE	10K JA	1/16W
R9886	301 298 6518	MT-GLAZE	3.3K FA	1/16W
R9887	301 294 3511	MT-GLAZE	27K FA	1/16W
R9888	301 294 3115	MT-GLAZE	1K FA	1/16W
R9889	301 299 4919	MT-GLAZE	470 FA	1/16W

Electrical Parts List

Key No.	Part No.	Description
R9890	301 224 9415	MT-GLAZE 1M JA 1/16W
R9891	301 150 6014	MT-GLAZE 0.000 ZA 1/10W
R9892	301 150 6014	MT-GLAZE 0.000 ZA 1/10W
R9893	301 150 6014	MT-GLAZE 0.000 ZA 1/10W
RB1301	945 036 3529	R-NETWORK 0X4 1/32W
	945 037 0817	R-NETWORK 0X4 1/16W
RB1302	945 036 3529	R-NETWORK 0X4 1/32W
	945 037 0817	R-NETWORK 0X4 1/16W
RB1303	945 036 3529	R-NETWORK 0X4 1/32W
	945 037 0817	R-NETWORK 0X4 1/16W
RB1304	945 036 3529	R-NETWORK 0X4 1/32W
	945 037 0817	R-NETWORK 0X4 1/16W
RB1305	945 036 3529	R-NETWORK 0X4 1/32W
	945 037 0817	R-NETWORK 0X4 1/16W
RB1306	945 036 3529	R-NETWORK 0X4 1/32W
	945 037 0817	R-NETWORK 0X4 1/16W
RB1307	945 036 3529	R-NETWORK 0X4 1/32W
	945 037 0817	R-NETWORK 0X4 1/16W
RB1308	945 036 3529	R-NETWORK 0X4 1/32W
	945 037 0817	R-NETWORK 0X4 1/16W
RB1309	945 036 3529	R-NETWORK 0X4 1/32W
	945 037 0817	R-NETWORK 0X4 1/16W
RB1311	945 036 3529	R-NETWORK 0X4 1/32W
	945 037 0817	R-NETWORK 0X4 1/16W
RB1312	945 036 3529	R-NETWORK 0X4 1/32W
	945 037 0817	R-NETWORK 0X4 1/16W
RB1313	945 036 3529	R-NETWORK 0X4 1/32W
	945 037 0817	R-NETWORK 0X4 1/16W
RB1314	945 036 3529	R-NETWORK 0X4 1/32W
	945 037 0817	R-NETWORK 0X4 1/16W
RB1315	945 036 3529	R-NETWORK 0X4 1/32W
	945 037 0817	R-NETWORK 0X4 1/16W
RB1316	945 036 3529	R-NETWORK 0X4 1/32W
	945 037 0817	R-NETWORK 0X4 1/16W
RB1317	945 036 3529	R-NETWORK 0X4 1/32W
	945 037 0817	R-NETWORK 0X4 1/16W
RB1501	945 036 3529	R-NETWORK 0X4 1/32W
	945 037 0817	R-NETWORK 0X4 1/16W
RB1502	945 036 3529	R-NETWORK 0X4 1/32W
	945 037 0817	R-NETWORK 0X4 1/16W
RB1503	945 036 3529	R-NETWORK 0X4 1/32W
	945 037 0817	R-NETWORK 0X4 1/16W
RB1531	945 036 3529	R-NETWORK 0X4 1/32W
	945 037 0817	R-NETWORK 0X4 1/16W
RB1532	945 036 3529	R-NETWORK 0X4 1/32W
	945 037 0817	R-NETWORK 0X4 1/16W
RB1533	945 036 3529	R-NETWORK 0X4 1/32W
	945 037 0817	R-NETWORK 0X4 1/16W
RB1561	945 036 3529	R-NETWORK 0X4 1/32W
	945 037 0817	R-NETWORK 0X4 1/16W
RB1562	945 036 3529	R-NETWORK 0X4 1/32W
	945 037 0817	R-NETWORK 0X4 1/16W
RB1563	945 036 3529	R-NETWORK 0X4 1/32W
	945 037 0817	R-NETWORK 0X4 1/16W
RB1851	645 049 0675	R-NETWORK 33X4 1/32W
	945 049 0690	R-NETWORK 33X4 1/16W
RB1852	645 049 0675	R-NETWORK 33X4 1/32W
	945 049 0690	R-NETWORK 33X4 1/16W
RB1853	645 049 0675	R-NETWORK 33X4 1/32W
	945 049 0690	R-NETWORK 33X4 1/16W
RB1854	645 049 0675	R-NETWORK 33X4 1/32W
	945 049 0690	R-NETWORK 33X4 1/16W
RB1855	645 049 0675	R-NETWORK 33X4 1/32W
	945 049 0690	R-NETWORK 33X4 1/16W
RB1856	645 049 0675	R-NETWORK 33X4 1/32W
	945 049 0690	R-NETWORK 33X4 1/16W
RB1857	645 049 0675	R-NETWORK 33X4 1/32W
	945 049 0690	R-NETWORK 33X4 1/16W
RB1858	645 049 0675	R-NETWORK 33X4 1/32W
	945 049 0690	R-NETWORK 33X4 1/16W
RB1883	945 072 6805	R-NETWORK 3.3KX4 1/32W
	945 072 6812	R-NETWORK 3.3KX4 1/16W
RB1884	945 072 6805	R-NETWORK 3.3KX4 1/32W
	945 072 6812	R-NETWORK 3.3KX4 1/16W
RB1885	945 036 0993	R-NETWORK 4.7KX4 1/32W
	945 033 1443	R-NETWORK 4.7KX4 1/16W
RB1886	945 036 0993	R-NETWORK 4.7KX4 1/32W
	945 033 1443	R-NETWORK 4.7KX4 1/16W
RB2201	645 049 0668	R-NETWORK 10X4 1/32W
	945 049 0683	R-NETWORK 10X4 1/16W
RB2202	645 049 0668	R-NETWORK 10X4 1/32W
	945 049 0683	R-NETWORK 10X4 1/16W
RB2203	645 049 0668	R-NETWORK 10X4 1/32W
	945 049 0683	R-NETWORK 10X4 1/16W
RB2204	645 049 0668	R-NETWORK 10X4 1/32W
	945 049 0683	R-NETWORK 10X4 1/16W
RB2205	645 049 0668	R-NETWORK 10X4 1/32W
	945 049 0683	R-NETWORK 10X4 1/16W
RB2206	645 049 0668	R-NETWORK 10X4 1/32W
	945 049 0683	R-NETWORK 10X4 1/16W
RB2207	645 049 0668	R-NETWORK 10X4 1/32W
	945 049 0683	R-NETWORK 10X4 1/16W
RB2211	645 049 0668	R-NETWORK 10X4 1/32W
	945 049 0683	R-NETWORK 10X4 1/16W
RB2212	645 049 0668	R-NETWORK 10X4 1/32W
	945 049 0683	R-NETWORK 10X4 1/16W
RB2213	645 049 0668	R-NETWORK 10X4 1/32W
	945 049 0683	R-NETWORK 10X4 1/16W
RB2214	645 049 0668	R-NETWORK 10X4 1/32W
	945 049 0683	R-NETWORK 10X4 1/16W
RB2215	645 049 0668	R-NETWORK 10X4 1/32W
	945 049 0683	R-NETWORK 10X4 1/16W
RB2216	645 049 0668	R-NETWORK 10X4 1/32W
	945 049 0683	R-NETWORK 10X4 1/16W
RB2217	645 049 0668	R-NETWORK 10X4 1/32W
	945 049 0683	R-NETWORK 10X4 1/16W
RB2218	645 049 0668	R-NETWORK 10X4 1/32W
	945 049 0683	R-NETWORK 10X4 1/16W
RB301	945 034 5051	R-NETWORK 22X4 1/32W
	945 037 0824	R-NETWORK 22X4 1/16W
RB303	945 034 5051	R-NETWORK 22X4 1/32W
	945 037 0824	R-NETWORK 22X4 1/16W
RB304	945 034 5051	R-NETWORK 22X4 1/32W
	945 037 0824	R-NETWORK 22X4 1/16W
RB305	945 034 5051	R-NETWORK 22X4 1/32W
	945 037 0824	R-NETWORK 22X4 1/16W
RB306	945 034 5051	R-NETWORK 22X4 1/32W
	945 037 0824	R-NETWORK 22X4 1/16W
RB307	945 034 5051	R-NETWORK 22X4 1/32W
	945 037 0824	R-NETWORK 22X4 1/16W
RB308	945 034 5051	R-NETWORK 22X4 1/32W
	945 037 0824	R-NETWORK 22X4 1/16W
RB309	945 034 5051	R-NETWORK 22X4 1/32W
	945 037 0824	R-NETWORK 22X4 1/16W
RB311	945 034 5051	R-NETWORK 22X4 1/32W
	945 037 0824	R-NETWORK 22X4 1/16W
RB313	945 034 5051	R-NETWORK 22X4 1/32W
	945 037 0824	R-NETWORK 22X4 1/16W
RB314	945 034 5051	R-NETWORK 22X4 1/32W
	945 037 0824	R-NETWORK 22X4 1/16W
RB316	945 034 5051	R-NETWORK 22X4 1/32W
	945 037 0824	R-NETWORK 22X4 1/16W
RB318	945 034 5051	R-NETWORK 22X4 1/32W
	945 037 0824	R-NETWORK 22X4 1/16W

Electrical Parts List

Key No.	Part No.	Description
RB319	945 034 5051	R-NETWORK 22X4 1/32W
	945 037 0824	R-NETWORK 22X4 1/16W
RB321	945 034 5051	R-NETWORK 22X4 1/32W
	945 037 0824	R-NETWORK 22X4 1/16W
RB323	945 034 5051	R-NETWORK 22X4 1/32W
	945 037 0824	R-NETWORK 22X4 1/16W
RB324	945 034 5051	R-NETWORK 22X4 1/32W
	945 037 0824	R-NETWORK 22X4 1/16W
RB325	945 034 5051	R-NETWORK 22X4 1/32W
	945 037 0824	R-NETWORK 22X4 1/16W
RB326	945 034 5051	R-NETWORK 22X4 1/32W
	945 037 0824	R-NETWORK 22X4 1/16W
RB327	945 034 5051	R-NETWORK 22X4 1/32W
	945 037 0824	R-NETWORK 22X4 1/16W
RB328	945 034 5051	R-NETWORK 22X4 1/32W
	945 037 0824	R-NETWORK 22X4 1/16W
RB329	945 034 5051	R-NETWORK 22X4 1/32W
	945 037 0824	R-NETWORK 22X4 1/16W
RB332	945 034 5051	R-NETWORK 22X4 1/32W
	945 037 0824	R-NETWORK 22X4 1/16W
RB333	945 034 5051	R-NETWORK 22X4 1/32W
	945 037 0824	R-NETWORK 22X4 1/16W
RB334	945 034 5051	R-NETWORK 22X4 1/32W
	945 037 0824	R-NETWORK 22X4 1/16W
RB335	945 034 5051	R-NETWORK 22X4 1/32W
	945 037 0824	R-NETWORK 22X4 1/16W
RB336	645 058 6422	R-NETWORK 68X4 1/32W
	945 054 1118	R-NETWORK 68X4 1/16W
RB337	645 058 6422	R-NETWORK 68X4 1/32W
	945 054 1118	R-NETWORK 68X4 1/16W
RB338	645 058 6422	R-NETWORK 68X4 1/32W
	945 054 1118	R-NETWORK 68X4 1/16W
RB339	645 058 6422	R-NETWORK 68X4 1/32W
	945 054 1118	R-NETWORK 68X4 1/16W
RB3401	645 058 6422	R-NETWORK 68X4 1/32W
	945 054 1118	R-NETWORK 68X4 1/16W
RB3402	645 058 6422	R-NETWORK 68X4 1/32W
	945 054 1118	R-NETWORK 68X4 1/16W
RB3403	645 058 6422	R-NETWORK 68X4 1/32W
	945 054 1118	R-NETWORK 68X4 1/16W
RB3404	645 058 6422	R-NETWORK 68X4 1/32W
	945 054 1118	R-NETWORK 68X4 1/16W
RB341	645 058 6422	R-NETWORK 68X4 1/32W
	945 054 1118	R-NETWORK 68X4 1/16W
RB342	645 058 6422	R-NETWORK 68X4 1/32W
	945 054 1118	R-NETWORK 68X4 1/16W
RB343	645 058 6422	R-NETWORK 68X4 1/32W
	945 054 1118	R-NETWORK 68X4 1/16W
RB406	945 034 5051	R-NETWORK 22X4 1/32W
	945 037 0824	R-NETWORK 22X4 1/16W
RB407	945 034 5051	R-NETWORK 22X4 1/32W
	945 037 0824	R-NETWORK 22X4 1/16W
RB408	945 034 5051	R-NETWORK 22X4 1/32W
	945 037 0824	R-NETWORK 22X4 1/16W
RB409	945 034 5051	R-NETWORK 22X4 1/32W
	945 037 0824	R-NETWORK 22X4 1/16W
RB411	945 034 5051	R-NETWORK 22X4 1/32W
	945 037 0824	R-NETWORK 22X4 1/16W
RB412	945 034 5051	R-NETWORK 22X4 1/32W
	945 037 0824	R-NETWORK 22X4 1/16W
RB413	945 034 5051	R-NETWORK 22X4 1/32W
	945 037 0824	R-NETWORK 22X4 1/16W
RB414	945 034 5051	R-NETWORK 22X4 1/32W
	945 037 0824	R-NETWORK 22X4 1/16W
RB416	945 034 5051	R-NETWORK 22X4 1/32W
	945 037 0824	R-NETWORK 22X4 1/16W
RB417	945 034 5051	R-NETWORK 22X4 1/32W
	945 037 0824	R-NETWORK 22X4 1/16W
RB418	945 034 5051	R-NETWORK 22X4 1/32W
	945 037 0824	R-NETWORK 22X4 1/16W
RB419	945 034 5051	R-NETWORK 22X4 1/32W
	945 037 0824	R-NETWORK 22X4 1/16W
RB421	945 034 5051	R-NETWORK 22X4 1/32W
	945 037 0824	R-NETWORK 22X4 1/16W
RB422	945 034 5051	R-NETWORK 22X4 1/32W
	945 037 0824	R-NETWORK 22X4 1/16W
RB423	945 034 5051	R-NETWORK 22X4 1/32W
	945 037 0824	R-NETWORK 22X4 1/16W
RB424	945 034 5051	R-NETWORK 22X4 1/32W
	945 037 0824	R-NETWORK 22X4 1/16W
RB426	945 034 5051	R-NETWORK 22X4 1/32W
	945 037 0824	R-NETWORK 22X4 1/16W
RB427	945 034 5051	R-NETWORK 22X4 1/32W
	945 037 0824	R-NETWORK 22X4 1/16W
RB4705	945 036 0979	R-NETWORK 10KX4 1/32W
	945 028 0710	R-NETWORK 10KX4 1/16W
RB501	945 036 3529	R-NETWORK 0X4 1/32W
	945 037 0817	R-NETWORK 0X4 1/16W
RB502	945 036 3529	R-NETWORK 0X4 1/32W
	945 037 0817	R-NETWORK 0X4 1/16W
RB503	945 036 3529	R-NETWORK 0X4 1/32W
	945 037 0817	R-NETWORK 0X4 1/16W
RB5217	945 036 3529	R-NETWORK 0X4 1/32W
	945 037 0817	R-NETWORK 0X4 1/16W
RB5218	945 036 3529	R-NETWORK 0X4 1/32W
	945 037 0817	R-NETWORK 0X4 1/16W
RB5219	945 036 3529	R-NETWORK 0X4 1/32W
	945 037 0817	R-NETWORK 0X4 1/16W
RB5221	945 036 3529	R-NETWORK 0X4 1/32W
	945 037 0817	R-NETWORK 0X4 1/16W
RB5222	945 036 3529	R-NETWORK 0X4 1/32W
	945 037 0817	R-NETWORK 0X4 1/16W
RB5223	945 036 3529	R-NETWORK 0X4 1/32W
	945 037 0817	R-NETWORK 0X4 1/16W
RB5224	945 036 3529	R-NETWORK 0X4 1/32W
	945 037 0817	R-NETWORK 0X4 1/16W
RB5225	945 036 3529	R-NETWORK 0X4 1/32W
	945 037 0817	R-NETWORK 0X4 1/16W
RB5226	945 036 3529	R-NETWORK 0X4 1/32W
	945 037 0817	R-NETWORK 0X4 1/16W
RB5227	945 036 3529	R-NETWORK 0X4 1/32W
	945 037 0817	R-NETWORK 0X4 1/16W
RB5228	945 036 3529	R-NETWORK 0X4 1/32W
	945 037 0817	R-NETWORK 0X4 1/16W
RB5229	945 036 3529	R-NETWORK 0X4 1/32W
	945 037 0817	R-NETWORK 0X4 1/16W
RB5231	945 036 3529	R-NETWORK 0X4 1/32W
	945 037 0817	R-NETWORK 0X4 1/16W
RB5232	945 036 3529	R-NETWORK 0X4 1/32W
	945 037 0817	R-NETWORK 0X4 1/16W
RB5233	945 036 3529	R-NETWORK 0X4 1/32W
	945 037 0817	R-NETWORK 0X4 1/16W
RB531	945 036 3529	R-NETWORK 0X4 1/32W
	945 037 0817	R-NETWORK 0X4 1/16W
RB532	945 036 3529	R-NETWORK 0X4 1/32W
	945 037 0817	R-NETWORK 0X4 1/16W
RB533	945 036 3529	R-NETWORK 0X4 1/32W
	945 037 0817	R-NETWORK 0X4 1/16W
RB561	945 036 3529	R-NETWORK 0X4 1/32W
	945 037 0817	R-NETWORK 0X4 1/16W
RB562	945 036 3529	R-NETWORK 0X4 1/32W
	945 037 0817	R-NETWORK 0X4 1/16W
RB563	945 036 3529	R-NETWORK 0X4 1/32W
	945 037 0817	R-NETWORK 0X4 1/16W

Electrical Parts List

Key No.	Part No.	Description
RB5721	945 029 5783	R-NETWORK 100X4 1/32W
	945 028 0697	R-NETWORK 100X4 1/16W
RB5751	945 036 0993	R-NETWORK 4.7KX4 1/32W
	945 033 1443	R-NETWORK 4.7KX4 1/16W
RB5752	945 036 0993	R-NETWORK 4.7KX4 1/32W
	945 033 1443	R-NETWORK 4.7KX4 1/16W
RB5753	945 036 0993	R-NETWORK 4.7KX4 1/32W
	945 033 1443	R-NETWORK 4.7KX4 1/16W
RB5772	945 029 5783	R-NETWORK 100X4 1/32W
	945 028 0697	R-NETWORK 100X4 1/16W
RB5773	945 029 5783	R-NETWORK 100X4 1/32W
	945 028 0697	R-NETWORK 100X4 1/16W
RB5774	945 029 5783	R-NETWORK 100X4 1/32W
	945 028 0697	R-NETWORK 100X4 1/16W
RB5801	945 036 0986	R-NETWORK 47X4 1/32W
	945 037 0831	R-NETWORK 47X4 1/16W
RB5802	945 036 0986	R-NETWORK 47X4 1/32W
	945 037 0831	R-NETWORK 47X4 1/16W
RB5803	945 036 0986	R-NETWORK 47X4 1/32W
	945 037 0831	R-NETWORK 47X4 1/16W
RB5804	945 036 0986	R-NETWORK 47X4 1/32W
	945 037 0831	R-NETWORK 47X4 1/16W
RB5805	945 036 0986	R-NETWORK 47X4 1/32W
	945 037 0831	R-NETWORK 47X4 1/16W
RB5806	945 036 0986	R-NETWORK 47X4 1/32W
	945 037 0831	R-NETWORK 47X4 1/16W
RB5807	945 036 0986	R-NETWORK 47X4 1/32W
	945 037 0831	R-NETWORK 47X4 1/16W
RB5808	945 036 0986	R-NETWORK 47X4 1/32W
	945 037 0831	R-NETWORK 47X4 1/16W
RB5809	945 029 5790	R-NETWORK 1KX4 1/32W
	945 028 0703	R-NETWORK 1KX4 1/16W
RB5811	945 029 5790	R-NETWORK 1KX4 1/32W
	945 028 0703	R-NETWORK 1KX4 1/16W
RB5812	945 029 5790	R-NETWORK 1KX4 1/32W
	945 028 0703	R-NETWORK 1KX4 1/16W
RB5813	945 029 5790	R-NETWORK 1KX4 1/32W
	945 028 0703	R-NETWORK 1KX4 1/16W
RB5814	945 029 5790	R-NETWORK 1KX4 1/32W
	945 028 0703	R-NETWORK 1KX4 1/16W
RB5816	945 029 5790	R-NETWORK 1KX4 1/32W
	945 028 0703	R-NETWORK 1KX4 1/16W
RB5817	945 029 5790	R-NETWORK 1KX4 1/32W
	945 028 0703	R-NETWORK 1KX4 1/16W
RB5818	945 029 5790	R-NETWORK 1KX4 1/32W
	945 028 0703	R-NETWORK 1KX4 1/16W
RB5851	945 034 5051	R-NETWORK 22X4 1/32W
	945 037 0824	R-NETWORK 22X4 1/16W
RB5852	945 034 5051	R-NETWORK 22X4 1/32W
	945 037 0824	R-NETWORK 22X4 1/16W
RB5853	945 034 5051	R-NETWORK 22X4 1/32W
	945 037 0824	R-NETWORK 22X4 1/16W
RB5854	945 034 5051	R-NETWORK 22X4 1/32W
	945 037 0824	R-NETWORK 22X4 1/16W
RB5855	945 034 5051	R-NETWORK 22X4 1/32W
	945 037 0824	R-NETWORK 22X4 1/16W
RB5856	945 036 3529	R-NETWORK 0X4 1/32W
	945 037 0817	R-NETWORK 0X4 1/16W
RB5861	945 036 0986	R-NETWORK 47X4 1/32W
	945 037 0831	R-NETWORK 47X4 1/16W
RB5862	945 036 0986	R-NETWORK 47X4 1/32W
	945 037 0831	R-NETWORK 47X4 1/16W
RB5863	945 036 0986	R-NETWORK 47X4 1/32W
	945 037 0831	R-NETWORK 47X4 1/16W
RB5864	945 036 0986	R-NETWORK 47X4 1/32W
	945 037 0831	R-NETWORK 47X4 1/16W
RB5865	945 034 5051	R-NETWORK 22X4 1/32W
	945 037 0824	R-NETWORK 22X4 1/16W
RB5866	945 034 5051	R-NETWORK 22X4 1/32W
	945 037 0824	R-NETWORK 22X4 1/16W
RB5867	945 034 5051	R-NETWORK 22X4 1/32W
	945 037 0824	R-NETWORK 22X4 1/16W
RB5868	945 034 5051	R-NETWORK 22X4 1/32W
	945 037 0824	R-NETWORK 22X4 1/16W
RB5869	945 034 5051	R-NETWORK 22X4 1/32W
	945 037 0824	R-NETWORK 22X4 1/16W
RB5871	945 034 5051	R-NETWORK 22X4 1/32W
	945 037 0824	R-NETWORK 22X4 1/16W
RB5872	945 034 5051	R-NETWORK 22X4 1/32W
	945 037 0824	R-NETWORK 22X4 1/16W
RB5873	945 034 5051	R-NETWORK 22X4 1/32W
	945 037 0824	R-NETWORK 22X4 1/16W
RB5875	945 036 0979	R-NETWORK 10KX4 1/32W
	945 028 0710	R-NETWORK 10KX4 1/16W
RB5876	645 049 0668	R-NETWORK 10X4 1/32W
	945 049 0683	R-NETWORK 10X4 1/16W
RB5877	645 049 0668	R-NETWORK 10X4 1/32W
	945 049 0683	R-NETWORK 10X4 1/16W
RB5878	645 049 0668	R-NETWORK 10X4 1/32W
	945 049 0683	R-NETWORK 10X4 1/16W
RB5881	945 029 5790	R-NETWORK 1KX4 1/32W
	945 028 0703	R-NETWORK 1KX4 1/16W
RB5882	945 029 5790	R-NETWORK 1KX4 1/32W
	945 028 0703	R-NETWORK 1KX4 1/16W
RB6211	945 036 3529	R-NETWORK 0X4 1/32W
	945 037 0817	R-NETWORK 0X4 1/16W
RB6212	945 036 3529	R-NETWORK 0X4 1/32W
	945 037 0817	R-NETWORK 0X4 1/16W
RB6213	945 036 3529	R-NETWORK 0X4 1/32W
	945 037 0817	R-NETWORK 0X4 1/16W
RB6214	945 036 3529	R-NETWORK 0X4 1/32W
	945 037 0817	R-NETWORK 0X4 1/16W
RB6215	945 036 3529	R-NETWORK 0X4 1/32W
	945 037 0817	R-NETWORK 0X4 1/16W
RB6216	945 036 3529	R-NETWORK 0X4 1/32W
	945 037 0817	R-NETWORK 0X4 1/16W
RB6217	945 036 3529	R-NETWORK 0X4 1/32W
	945 037 0817	R-NETWORK 0X4 1/16W
RB6218	945 029 5790	R-NETWORK 1KX4 1/32W
	945 028 0703	R-NETWORK 1KX4 1/16W
RB6219	945 029 5790	R-NETWORK 1KX4 1/32W
	945 028 0703	R-NETWORK 1KX4 1/16W
RB6221	945 029 5790	R-NETWORK 1KX4 1/32W
	945 028 0703	R-NETWORK 1KX4 1/16W
RB6222	945 029 5790	R-NETWORK 1KX4 1/32W
	945 028 0703	R-NETWORK 1KX4 1/16W
RB6223	945 029 5790	R-NETWORK 1KX4 1/32W
	945 028 0703	R-NETWORK 1KX4 1/16W
RB6224	945 029 5790	R-NETWORK 1KX4 1/32W
	945 028 0703	R-NETWORK 1KX4 1/16W
RB6225	945 029 5790	R-NETWORK 1KX4 1/32W
	945 028 0703	R-NETWORK 1KX4 1/16W
RB6226	945 029 5790	R-NETWORK 1KX4 1/32W
	945 028 0703	R-NETWORK 1KX4 1/16W
RB7301	945 034 5051	R-NETWORK 22X4 1/32W
	945 037 0824	R-NETWORK 22X4 1/16W
RB7302	945 034 5051	R-NETWORK 22X4 1/32W
	945 037 0824	R-NETWORK 22X4 1/16W
RB7303	945 034 5051	R-NETWORK 22X4 1/32W
	945 037 0824	R-NETWORK 22X4 1/16W
RB7304	945 034 5051	R-NETWORK 22X4 1/32W
	945 037 0824	R-NETWORK 22X4 1/16W
RB7306	945 034 5051	R-NETWORK 22X4 1/32W
	945 037 0824	R-NETWORK 22X4 1/16W

Electrical Parts List

Key No.	Part No.	Description
RB7307	945 034 5051	R-NETWORK 22X4 1/32W
	945 037 0824	R-NETWORK 22X4 1/16W
RB7308	945 034 5051	R-NETWORK 22X4 1/32W
	945 037 0824	R-NETWORK 22X4 1/16W
RB7309	945 034 5051	R-NETWORK 22X4 1/32W
	945 037 0824	R-NETWORK 22X4 1/16W
RB7311	945 034 5051	R-NETWORK 22X4 1/32W
	945 037 0824	R-NETWORK 22X4 1/16W
RB7312	945 034 5051	R-NETWORK 22X4 1/32W
	945 037 0824	R-NETWORK 22X4 1/16W
RB7313	945 034 5051	R-NETWORK 22X4 1/32W
	945 037 0824	R-NETWORK 22X4 1/16W
RB7314	945 034 5051	R-NETWORK 22X4 1/32W
	945 037 0824	R-NETWORK 22X4 1/16W
RB7315	945 034 5051	R-NETWORK 22X4 1/32W
	945 037 0824	R-NETWORK 22X4 1/16W
RB7316	945 034 5051	R-NETWORK 22X4 1/32W
	945 037 0824	R-NETWORK 22X4 1/16W
RB811	645 058 6422	R-NETWORK 68X4 1/32W
	945 054 1118	R-NETWORK 68X4 1/16W
RB812	645 058 6422	R-NETWORK 68X4 1/32W
	945 054 1118	R-NETWORK 68X4 1/16W
RB813	645 058 6422	R-NETWORK 68X4 1/32W
	945 054 1118	R-NETWORK 68X4 1/16W
RB814	645 058 6422	R-NETWORK 68X4 1/32W
	945 054 1118	R-NETWORK 68X4 1/16W
RB815	645 058 6422	R-NETWORK 68X4 1/32W
	945 054 1118	R-NETWORK 68X4 1/16W
RB816	645 058 6422	R-NETWORK 68X4 1/32W
	945 054 1118	R-NETWORK 68X4 1/16W
RB817	645 058 6422	R-NETWORK 68X4 1/32W
	945 054 1118	R-NETWORK 68X4 1/16W
RB818	645 058 6422	R-NETWORK 68X4 1/32W
	945 054 1118	R-NETWORK 68X4 1/16W
RB819	645 058 6422	R-NETWORK 68X4 1/32W
	945 054 1118	R-NETWORK 68X4 1/16W
RB8201	945 034 5051	R-NETWORK 22X4 1/32W
	945 037 0824	R-NETWORK 22X4 1/16W
RB8202	945 034 5051	R-NETWORK 22X4 1/32W
	945 037 0824	R-NETWORK 22X4 1/16W
RB8203	945 034 5051	R-NETWORK 22X4 1/32W
	945 037 0824	R-NETWORK 22X4 1/16W
RB8204	945 034 5051	R-NETWORK 22X4 1/32W
	945 037 0824	R-NETWORK 22X4 1/16W
RB8205	945 034 5051	R-NETWORK 22X4 1/32W
	945 037 0824	R-NETWORK 22X4 1/16W
RB821	645 058 6422	R-NETWORK 68X4 1/32W
	945 054 1118	R-NETWORK 68X4 1/16W
RB822	645 058 6422	R-NETWORK 68X4 1/32W
	945 054 1118	R-NETWORK 68X4 1/16W
RB8221	945 034 5051	R-NETWORK 22X4 1/32W
	945 037 0824	R-NETWORK 22X4 1/16W
RB8222	945 034 5051	R-NETWORK 22X4 1/32W
	945 037 0824	R-NETWORK 22X4 1/16W
RB8223	945 034 5051	R-NETWORK 22X4 1/32W
	945 037 0824	R-NETWORK 22X4 1/16W
RB8224	945 034 5051	R-NETWORK 22X4 1/32W
	945 037 0824	R-NETWORK 22X4 1/16W
RB8225	945 034 5051	R-NETWORK 22X4 1/32W
	945 037 0824	R-NETWORK 22X4 1/16W
RB823	645 058 6422	R-NETWORK 68X4 1/32W
	945 054 1118	R-NETWORK 68X4 1/16W
RB8231	945 034 5051	R-NETWORK 22X4 1/32W
	945 037 0824	R-NETWORK 22X4 1/16W
RB8232	945 034 5051	R-NETWORK 22X4 1/32W
	945 037 0824	R-NETWORK 22X4 1/16W
RB8233	945 034 5051	R-NETWORK 22X4 1/32W
	945 037 0824	R-NETWORK 22X4 1/16W
RB8234	945 034 5051	R-NETWORK 22X4 1/32W
	945 037 0824	R-NETWORK 22X4 1/16W
RB8235	945 034 5051	R-NETWORK 22X4 1/32W
	945 037 0824	R-NETWORK 22X4 1/16W
RB824	645 058 6422	R-NETWORK 68X4 1/32W
	945 054 1118	R-NETWORK 68X4 1/16W
RB825	645 058 6422	R-NETWORK 68X4 1/32W
	945 054 1118	R-NETWORK 68X4 1/16W
RB826	945 036 0979	R-NETWORK 10KX4 1/32W
	945 028 0710	R-NETWORK 10KX4 1/16W
RB827	945 036 0979	R-NETWORK 10KX4 1/32W
	945 028 0710	R-NETWORK 10KX4 1/16W
COIL		
L1451	945 080 6828	INDUCTOR,3.3U M
L1452	945 080 6828	INDUCTOR,3.3U M
L1454	945 059 2240	INDUCTOR,2.2U M
L1455	945 036 3895	INDUCTOR,220 OHM
L1456	945 059 2240	INDUCTOR,2.2U M
L1501	945 080 6828	INDUCTOR,3.3U M
L1502	945 080 6828	INDUCTOR,3.3U M
L1503	945 080 6828	INDUCTOR,3.3U M
L1531	945 080 6828	INDUCTOR,3.3U M
L1532	945 080 6828	INDUCTOR,3.3U M
L1533	945 080 6828	INDUCTOR,3.3U M
L1561	945 080 6828	INDUCTOR,3.3U M
L1562	945 080 6828	INDUCTOR,3.3U M
L1563	945 080 6828	INDUCTOR,3.3U M
L201	945 080 6828	INDUCTOR,3.3U M
L202	945 080 6828	INDUCTOR,3.3U M
L2211	945 080 6828	INDUCTOR,3.3U M
L2212	945 080 6828	INDUCTOR,3.3U M
L2251	301 035 4111	MT-GLAZE 0.000 ZA 1/8W
L2252	301 035 4111	MT-GLAZE 0.000 ZA 1/8W
L2253	301 035 4111	MT-GLAZE 0.000 ZA 1/8W
L2254	301 035 4111	MT-GLAZE 0.000 ZA 1/8W
L2255	301 035 4111	MT-GLAZE 0.000 ZA 1/8W
L2501	945 059 1755	INDUCTOR,22U J
L2531	945 059 1755	INDUCTOR,22U J
L2561	945 059 1755	INDUCTOR,22U J
L2581	301 035 4111	MT-GLAZE 0.000 ZA 1/8W
L2582	301 035 4111	MT-GLAZE 0.000 ZA 1/8W
L301	945 050 8449	IMPEDANCE,1000 OHM P
L302	945 050 8449	IMPEDANCE,1000 OHM P
L303	945 050 8449	IMPEDANCE,1000 OHM P
L304	945 050 8449	IMPEDANCE,1000 OHM P
L501	945 080 6828	INDUCTOR,3.3U M
L502	945 080 6828	INDUCTOR,3.3U M
L503	945 080 6828	INDUCTOR,3.3U M
L5241	945 080 6828	INDUCTOR,3.3U M
L5252	945 036 3895	INDUCTOR,220 OHM
L5253	945 080 6828	INDUCTOR,3.3U M
L5254	945 080 6828	INDUCTOR,3.3U M
L531	945 080 6828	INDUCTOR,3.3U M
L532	945 080 6828	INDUCTOR,3.3U M
L533	945 080 6828	INDUCTOR,3.3U M
L5501	301 226 1516	MT-GLAZE 0.000 ZA 1/16W
L5502	301 226 1516	MT-GLAZE 0.000 ZA 1/16W
L5503	301 226 1516	MT-GLAZE 0.000 ZA 1/16W
L5504	301 226 1516	MT-GLAZE 0.000 ZA 1/16W
L561	945 080 6828	INDUCTOR,3.3U M
L562	945 080 6828	INDUCTOR,3.3U M
L563	945 080 6828	INDUCTOR,3.3U M
L5661	945 036 3895	INDUCTOR,220 OHM
L5662	945 036 3895	INDUCTOR,220 OHM
L5663	945 036 3895	INDUCTOR,220 OHM

Electrical Parts List

Key No.	Part No.	Description
L5671	945 080 6828	INDUCTOR,3.3U M
L5672	945 080 6828	INDUCTOR,3.3U M
L5673	945 080 6828	INDUCTOR,3.3U M
L5674	945 075 1388	INDUCTOR,10U M
L5675	945 036 3895	INDUCTOR,220 OHM
L5676	945 036 3895	INDUCTOR,220 OHM
L5711	645 092 3616	IMPEDANCE,22 OHM P
L5712	645 092 3616	IMPEDANCE,22 OHM P
L5713	645 092 3616	IMPEDANCE,22 OHM P
L5714	645 092 3616	IMPEDANCE,22 OHM P
L5715	645 092 3616	IMPEDANCE,22 OHM P
L5716	645 092 3616	IMPEDANCE,22 OHM P
L5717	645 092 3616	IMPEDANCE,22 OHM P
L5718	645 092 3616	IMPEDANCE,22 OHM P
L5801	945 080 6828	INDUCTOR,3.3U M
L5861	945 080 6828	INDUCTOR,3.3U M
L5893	645 092 3616	IMPEDANCE,22 OHM P
L7703	301 035 4111	MT-GLAZE 0.000 ZA 1/8W
L7721	945 037 4808	INDUCTOR,33U M
L7801	945 036 3895	INDUCTOR,220 OHM
L7811	945 036 3895	INDUCTOR,220 OHM
L7822	945 059 2240	INDUCTOR,2.2U M
L9222	945 064 7988	INDUCTOR,470U M
L9223	945 086 6648	IMPEDANCE,220 OHM P
DIODE		
D1451	307 163 0414	DIODE 1SS352-(TPH3)
D1452	307 163 0414	DIODE 1SS352-(TPH3)
D2551	307 163 0414	DIODE 1SS352-(TPH3)
D4701	307 223 0514	ZENER DIODE 02DZ12Y(TPH3)
D4704	307 223 1115	ZENER DIODE 02DZ6.2Y(TPH3
D4706	307 223 1115	ZENER DIODE 02DZ6.2Y(TPH3
D4707	307 223 1115	ZENER DIODE 02DZ6.2Y(TPH3
D4708	307 223 1115	ZENER DIODE 02DZ6.2Y(TPH3
D4709	307 223 1115	ZENER DIODE 02DZ6.2Y(TPH3
D4731	307 223 1115	ZENER DIODE 02DZ6.2Y(TPH3
D4761	307 223 1115	ZENER DIODE 02DZ6.2Y(TPH3
D4762	307 223 1115	ZENER DIODE 02DZ6.2Y(TPH3
D4779	307 163 0414	DIODE 1SS352-(TPH3)
D4781	307 163 0414	DIODE 1SS352-(TPH3)
D4782	307 163 0414	DIODE 1SS352-(TPH3)
D4783	307 163 0414	DIODE 1SS352-(TPH3)
D4784	307 251 8711	DIODE SS3P3-E3/84A
D4785	307 251 8711	DIODE SS3P3-E3/84A
D4786	307 251 8711	DIODE SS3P3-E3/84A
D4787	307 163 0414	DIODE 1SS352-(TPH3)
D4788	307 163 0414	DIODE 1SS352-(TPH3)
D4789	307 163 0414	DIODE 1SS352-(TPH3)
D5501	307 190 4119	DIODE SFPL-52V
D5502	307 190 4119	DIODE SFPL-52V
D5503	307 190 4119	DIODE SFPL-52V
D5504	307 190 4119	DIODE SFPL-52V
D5630	307 163 0414	DIODE 1SS352-(TPH3)
D5661	307 163 0414	DIODE 1SS352-(TPH3)
D5701	307 223 1115	ZENER DIODE 02DZ6.2Y(TPH3
D5711	307 223 1115	ZENER DIODE 02DZ6.2Y(TPH3
D5865	307 223 1115	ZENER DIODE 02DZ6.2Y(TPH3
D591	307 225 0215	DIODE RB751S-40
D7721	307 223 5014	DIODE D1FM3
D7722	307 163 0414	DIODE 1SS352-(TPH3)
D7723	307 163 0414	DIODE 1SS352-(TPH3)
D7801	307 163 0414	DIODE 1SS352-(TPH3)
D7802	307 163 0414	DIODE 1SS352-(TPH3)
D7831	307 163 0414	DIODE 1SS352-(TPH3)
D9802	307 254 2716	DIODE CMS16
D9803	307 163 0414	DIODE 1SS352-(TPH3)
MISCELLANEOUS		

Key No.	Part No.	Description
K21B	645 096 4022	PLUG,ANT 1P
K21G	645 096 4022	PLUG,ANT 1P
K21R	645 096 4022	PLUG,ANT 1P
X2201	945 076 2407	OSC,CRYSTAL 25.000MHZ
X301	945 076 0281	OSC,CRYSTAL 14.31818MHZ
X801	645 101 8625	OSC,CRYSTAL 33.3333MHZ
X802	645 101 8618	OSC,CRYSTAL 48.0000MHZ

AA8001 610 347 5721 ASSY,PWB,AV/DVI .KE8A

TRANSISTOR		
Q1021	305 014 4512	TR 2SC2412K T146 R
	305 014 4611	TR 2SC2412K T146 S
	305 015 8727	TR 2SC2812-L6-TB
	305 015 8925	TR 2SC2812-L7-TB
	305 163 1615	TR 2SC2812N-L6-TB0
	305 173 9816	TR 2SC3928A1R
	305 173 9915	TR 2SC3928A1S
Q1022	305 014 4512	TR 2SC2412K T146 R
	305 014 4611	TR 2SC2412K T146 S
	305 015 8727	TR 2SC2812-L6-TB
	305 015 8925	TR 2SC2812-L7-TB
	305 163 1615	TR 2SC2812N-L6-TB0
	305 173 9816	TR 2SC3928A1R
	305 173 9915	TR 2SC3928A1S
Q1023	305 014 4512	TR 2SC2412K T146 R
	305 014 4611	TR 2SC2412K T146 S
	305 015 8727	TR 2SC2812-L6-TB
	305 015 8925	TR 2SC2812-L7-TB
	305 163 1615	TR 2SC2812N-L6-TB0
	305 173 9816	TR 2SC3928A1R
	305 173 9915	TR 2SC3928A1S
Q1101	305 134 5928	TR 2SA1037AK-T146-R
	305 147 2218	TR 2SA1037AK-S-T146
	305 173 9618	TR 2SA1235A1E
	305 173 9717	TR 2SA1235A1F
	405 220 3115	TR ISA1235AC1E
	405 220 3016	TR ISA1235AC1F
Q1102	305 014 4512	TR 2SC2412K T146 R
	305 014 4611	TR 2SC2412K T146 S
	305 015 8727	TR 2SC2812-L6-TB
	305 015 8925	TR 2SC2812-L7-TB
	305 163 1615	TR 2SC2812N-L6-TB0
	305 173 9816	TR 2SC3928A1R
	305 173 9915	TR 2SC3928A1S
Q1103	305 134 5928	TR 2SA1037AK-T146-R
	305 147 2218	TR 2SA1037AK-S-T146
	305 173 9618	TR 2SA1235A1E
	305 173 9717	TR 2SA1235A1F
	405 220 3115	TR ISA1235AC1E
	405 220 3016	TR ISA1235AC1F
Q1104	305 014 4512	TR 2SC2412K T146 R
	305 014 4611	TR 2SC2412K T146 S
	305 015 8727	TR 2SC2812-L6-TB
	305 015 8925	TR 2SC2812-L7-TB
	305 163 1615	TR 2SC2812N-L6-TB0
	305 173 9816	TR 2SC3928A1R
	305 173 9915	TR 2SC3928A1S
Q1181	305 134 5928	TR 2SA1037AK-T146-R
	305 147 2218	TR 2SA1037AK-S-T146
	305 173 9618	TR 2SA1235A1E
	305 173 9717	TR 2SA1235A1F
	405 220 3115	TR ISA1235AC1E
	405 220 3016	TR ISA1235AC1F
Q1182	305 134 5928	TR 2SA1037AK-T146-R
	305 147 2218	TR 2SA1037AK-S-T146

Electrical Parts List

Key No.	Part No.	Description
	305 173 9618	TR 2SA1235A1E
	305 173 9717	TR 2SA1235A1F
	405 220 3115	TR ISA1235AC1E
	405 220 3016	TR ISA1235AC1F
Q1191	305 191 5814	TR 3LN01C-TB-E
Q1192	305 191 5814	TR 3LN01C-TB-E
Q1224	305 014 4512	TR 2SC2412K T146 R
	305 014 4611	TR 2SC2412K T146 S
	305 015 8727	TR 2SC2812-L6-TB
	305 015 8925	TR 2SC2812-L7-TB
	305 163 1615	TR 2SC2812N-L6-TB0
	305 173 9816	TR 2SC3928A1R
	305 173 9915	TR 2SC3928A1S
Q2001	305 014 4512	TR 2SC2412K T146 R
	305 014 4611	TR 2SC2412K T146 S
	305 015 8727	TR 2SC2812-L6-TB
	305 015 8925	TR 2SC2812-L7-TB
	305 163 1615	TR 2SC2812N-L6-TB0
	305 173 9816	TR 2SC3928A1R
	305 173 9915	TR 2SC3928A1S
Q2002	305 134 5928	TR 2SA1037AK-T146-R
	305 147 2218	TR 2SA1037AK-S-T146
	305 173 9618	TR 2SA1235A1E
	305 173 9717	TR 2SA1235A1F
	405 220 3115	TR ISA1235AC1E
	405 220 3016	TR ISA1235AC1F
Q2003	305 134 5928	TR 2SA1037AK-T146-R
	305 147 2218	TR 2SA1037AK-S-T146
	305 173 9618	TR 2SA1235A1E
	305 173 9717	TR 2SA1235A1F
	405 220 3115	TR ISA1235AC1E
	405 220 3016	TR ISA1235AC1F
Q2022	406 021 3301	TR XP162A12A6PR
Q2023	305 014 4512	TR 2SC2412K T146 R
	305 014 4611	TR 2SC2412K T146 S
	305 015 8727	TR 2SC2812-L6-TB
	305 015 8925	TR 2SC2812-L7-TB
	305 163 1615	TR 2SC2812N-L6-TB0
	305 173 9816	TR 2SC3928A1R
	305 173 9915	TR 2SC3928A1S
Q2052	305 134 5928	TR 2SA1037AK-T146-R
	305 147 2218	TR 2SA1037AK-S-T146
	305 173 9618	TR 2SA1235A1E
	305 173 9717	TR 2SA1235A1F
	405 220 3115	TR ISA1235AC1E
	405 220 3016	TR ISA1235AC1F
Q2054	305 134 5928	TR 2SA1037AK-T146-R
	305 147 2218	TR 2SA1037AK-S-T146
	305 173 9618	TR 2SA1235A1E
	305 173 9717	TR 2SA1235A1F
	405 220 3115	TR ISA1235AC1E
	405 220 3016	TR ISA1235AC1F
Q2056	305 134 5928	TR 2SA1037AK-T146-R
	305 147 2218	TR 2SA1037AK-S-T146
	305 173 9618	TR 2SA1235A1E
	305 173 9717	TR 2SA1235A1F
	405 220 3115	TR ISA1235AC1E
	405 220 3016	TR ISA1235AC1F
Q2057	305 134 5928	TR 2SA1037AK-T146-R
	305 147 2218	TR 2SA1037AK-S-T146
	305 173 9618	TR 2SA1235A1E
	305 173 9717	TR 2SA1235A1F
	405 220 3115	TR ISA1235AC1E
	405 220 3016	TR ISA1235AC1F
Q2058	305 134 5928	TR 2SA1037AK-T146-R
	305 147 2218	TR 2SA1037AK-S-T146
	305 173 9618	TR 2SA1235A1E
	305 173 9717	TR 2SA1235A1F
	405 220 3115	TR ISA1235AC1E
	405 220 3016	TR ISA1235AC1F
Q2101	305 014 4512	TR 2SC2412K T146 R
	305 014 4611	TR 2SC2412K T146 S
	305 015 8727	TR 2SC2812-L6-TB
	305 015 8925	TR 2SC2812-L7-TB
	305 163 1615	TR 2SC2812N-L6-TB0
	305 173 9816	TR 2SC3928A1R
	305 173 9915	TR 2SC3928A1S
Q2102	305 134 5928	TR 2SA1037AK-T146-R
	305 147 2218	TR 2SA1037AK-S-T146
	305 173 9618	TR 2SA1235A1E
	305 173 9717	TR 2SA1235A1F
	405 220 3115	TR ISA1235AC1E
	405 220 3016	TR ISA1235AC1F
Q2103	305 134 5928	TR 2SA1037AK-T146-R
	305 147 2218	TR 2SA1037AK-S-T146
	305 173 9618	TR 2SA1235A1E
	305 173 9717	TR 2SA1235A1F
	405 220 3115	TR ISA1235AC1E
	405 220 3016	TR ISA1235AC1F
Q2104	305 014 4512	TR 2SC2412K T146 R
	305 014 4611	TR 2SC2412K T146 S
	305 015 8727	TR 2SC2812-L6-TB
	305 015 8925	TR 2SC2812-L7-TB
	305 163 1615	TR 2SC2812N-L6-TB0
	305 173 9816	TR 2SC3928A1R
	305 173 9915	TR 2SC3928A1S
Q3101	305 134 5928	TR 2SA1037AK-T146-R
	305 147 2218	TR 2SA1037AK-S-T146
	305 173 9618	TR 2SA1235A1E
	305 173 9717	TR 2SA1235A1F
	405 220 3115	TR ISA1235AC1E
	405 220 3016	TR ISA1235AC1F
Q3102	305 134 5928	TR 2SA1037AK-T146-R
	305 147 2218	TR 2SA1037AK-S-T146
	305 173 9618	TR 2SA1235A1E
	305 173 9717	TR 2SA1235A1F
	405 220 3115	TR ISA1235AC1E
	405 220 3016	TR ISA1235AC1F
Q3103	305 134 5928	TR 2SA1037AK-T146-R
	305 147 2218	TR 2SA1037AK-S-T146
	305 173 9618	TR 2SA1235A1E
	305 173 9717	TR 2SA1235A1F
	405 220 3115	TR ISA1235AC1E
	405 220 3016	TR ISA1235AC1F
Q3104	305 134 5928	TR 2SA1037AK-T146-R
	305 147 2218	TR 2SA1037AK-S-T146
	305 173 9618	TR 2SA1235A1E
	305 173 9717	TR 2SA1235A1F
	405 220 3115	TR ISA1235AC1E
	405 220 3016	TR ISA1235AC1F
Q3105	305 134 5928	TR 2SA1037AK-T146-R
	305 147 2218	TR 2SA1037AK-S-T146
	305 173 9618	TR 2SA1235A1E
	305 173 9717	TR 2SA1235A1F
	405 220 3115	TR ISA1235AC1E
	405 220 3016	TR ISA1235AC1F
Q3106	305 134 5928	TR 2SA1037AK-T146-R
	305 147 2218	TR 2SA1037AK-S-T146
	305 173 9618	TR 2SA1235A1E
	305 173 9717	TR 2SA1235A1F
	405 220 3115	TR ISA1235AC1E
	405 220 3016	TR ISA1235AC1F
Q8041	305 014 4512	TR 2SC2412K T146 R
	305 014 4611	TR 2SC2412K T146 S

Electrical Parts List

Key No.	Part No.	Description
	305 015 8727	TR 2SC2812-L6-TB
	305 015 8925	TR 2SC2812-L7-TB
	305 163 1615	TR 2SC2812N-L6-TB0
	305 173 9816	TR 2SC3928A1R
	305 173 9915	TR 2SC3928A1S
Q8051	305 014 4512	TR 2SC2412K T146 R
	305 014 4611	TR 2SC2412K T146 S
	305 015 8727	TR 2SC2812-L6-TB
	305 015 8925	TR 2SC2812-L7-TB
	305 163 1615	TR 2SC2812N-L6-TB0
	305 173 9816	TR 2SC3928A1R
	305 173 9915	TR 2SC3928A1S
Q8061	305 014 4512	TR 2SC2412K T146 R
	305 014 4611	TR 2SC2412K T146 S
	305 015 8727	TR 2SC2812-L6-TB
	305 015 8925	TR 2SC2812-L7-TB
	305 163 1615	TR 2SC2812N-L6-TB0
	305 173 9816	TR 2SC3928A1R
	305 173 9915	TR 2SC3928A1S
Q8071	305 014 4512	TR 2SC2412K T146 R
	305 014 4611	TR 2SC2412K T146 S
	305 015 8727	TR 2SC2812-L6-TB
	305 015 8925	TR 2SC2812-L7-TB
	305 163 1615	TR 2SC2812N-L6-TB0
	305 173 9816	TR 2SC3928A1R
	305 173 9915	TR 2SC3928A1S
Q8081	305 014 4512	TR 2SC2412K T146 R
	305 014 4611	TR 2SC2412K T146 S
	305 015 8727	TR 2SC2812-L6-TB
	305 015 8925	TR 2SC2812-L7-TB
	305 163 1615	TR 2SC2812N-L6-TB0
	305 173 9816	TR 2SC3928A1R
	305 173 9915	TR 2SC3928A1S
Q8091	305 014 4512	TR 2SC2412K T146 R
	305 014 4611	TR 2SC2412K T146 S
	305 015 8727	TR 2SC2812-L6-TB
	305 015 8925	TR 2SC2812-L7-TB
	305 163 1615	TR 2SC2812N-L6-TB0
	305 173 9816	TR 2SC3928A1R
	305 173 9915	TR 2SC3928A1S
Q8171	305 014 4512	TR 2SC2412K T146 R
	305 014 4611	TR 2SC2412K T146 S
	305 015 8727	TR 2SC2812-L6-TB
	305 015 8925	TR 2SC2812-L7-TB
	305 163 1615	TR 2SC2812N-L6-TB0
	305 173 9816	TR 2SC3928A1R
	305 173 9915	TR 2SC3928A1S
Q8172	305 014 4512	TR 2SC2412K T146 R
	305 014 4611	TR 2SC2412K T146 S
	305 015 8727	TR 2SC2812-L6-TB
	305 015 8925	TR 2SC2812-L7-TB
	305 163 1615	TR 2SC2812N-L6-TB0
	305 173 9816	TR 2SC3928A1R
	305 173 9915	TR 2SC3928A1S
Q8301	305 014 4512	TR 2SC2412K T146 R
	305 014 4611	TR 2SC2412K T146 S
	305 015 8727	TR 2SC2812-L6-TB
	305 015 8925	TR 2SC2812-L7-TB
	305 163 1615	TR 2SC2812N-L6-TB0
	305 173 9816	TR 2SC3928A1R
	305 173 9915	TR 2SC3928A1S
Q8302	305 191 5814	TR 3LN01C-TB-E
Q8303	305 191 5814	TR 3LN01C-TB-E
Q9954	305 217 4913	TR RN1111 TE85L
Q9956	305 217 4913	TR RN1111 TE85L
Q9957	305 217 4913	TR RN1111 TE85L
Q9958	305 217 4913	TR RN1111 TE85L
Q9959	305 217 4913	TR RN1111 TE85L
Q9966	305 217 4913	TR RN1111 TE85L
INTEGRATED CIRCUIT		
IC1031	309 461 7317	IC AD8057ARTZ-REEL7
IC1032	309 461 7317	IC AD8057ARTZ-REEL7
IC1033	309 461 7317	IC AD8057ARTZ-REEL7
IC1034	310 343 7001	IC SN74AHCT1G14DBVR
IC1035	310 343 7001	IC SN74AHCT1G14DBVR
IC1041	309 461 7317	IC AD8057ARTZ-REEL7
IC1042	309 461 7317	IC AD8057ARTZ-REEL7
IC1043	309 461 7317	IC AD8057ARTZ-REEL7
IC1044	309 461 7317	IC AD8057ARTZ-REEL7
IC1061	309 470 2617	IC AD8183ARUZ-REEL7
IC1086	310 343 7001	IC SN74AHCT1G14DBVR
IC2011	309 484 2016	IC BA7078AF-E2
IC2012	310 343 7001	IC SN74AHCT1G14DBVR
IC2013	310 392 4709	IC SN74AHCT1G125DCK
IC2014	310 392 4709	IC SN74AHCT1G125DCK
IC3011	309 461 7317	IC AD8057ARTZ-REEL7
IC3012	309 461 7317	IC AD8057ARTZ-REEL7
IC3102	310 343 7001	IC SN74AHCT1G14DBVR
IC3103	310 392 4709	IC SN74AHCT1G125DCK
IC3104	310 392 4709	IC SN74AHCT1G125DCK
IC3152	310 595 8009	IC PQ1LAX95MSPQ
IC4101	310 550 2202	IC EDS6416AHTA-75-E
	410 694 8006	IC A3V64S40ETP-G6
IC4131	410 643 5100	IC PQ070XNB1ZPH
IC4141	410 643 5100	IC PQ070XNB1ZPH
IC4151	310 595 8009	IC PQ1LAX95MSPQ
IC4161	310 595 8009	IC PQ1LAX95MSPQ
IC8001	410 641 3801	IC SII7169CTU
IC8015	309 462 2311	IC TC7SZ04FU-TE852
IC8016	309 462 2311	IC TC7SZ04FU-TE852
IC8017	309 462 2311	IC TC7SZ04FU-TE852
IC8021	309 484 2016	IC BA7078AF-E2
IC8031	310 343 7001	IC SN74AHCT1G14DBVR
IC8032	310 343 7001	IC SN74AHCT1G14DBVR
IC8033	310 343 7001	IC SN74AHCT1G14DBVR
IC8034	309 400 7118	IC TC7W53FU-(TE12L)
IC8035	309 400 7118	IC TC7W53FU-(TE12L)
IC8041	309 441 8419	IC LA7217M-T-TRM-E
IC8051	309 643 3915	IC QS3125QGX
IC8061	309 461 7317	IC AD8057ARTZ-REEL7
IC8062	309 461 7317	IC AD8057ARTZ-REEL7
IC8063	309 461 7317	IC AD8057ARTZ-REEL7
IC8064	310 343 7001	IC SN74AHCT1G14DBVR
IC8065	310 343 7001	IC SN74AHCT1G14DBVR
IC8066	309 461 7317	IC AD8057ARTZ-REEL7
IC8071	310 474 1305	IC TC74VCX162821FT
IC8072	310 474 1305	IC TC74VCX162821FT
IC8073	310 474 1305	IC TC74VCX162821FT
IC8121	310 517 6809	IC TC74LVX4053FT
IC8122	309 462 0327	IC 24LC21AT/SN
IC8131	410 643 5100	IC PQ070XNB1ZPH
IC8172	309 416 6518	IC BA05FP-E2
IC8181	309 404 6325	IC M62320FP-DF5J
IC8182	309 404 6325	IC M62320FP-DF5J
IC8183	309 404 6325	IC M62320FP-DF5J
IC8184	309 400 9112	IC TC7SET08FU-(TE85L)
IC8193	309 487 5816	IC 24C01CT/SN
IC8194	310 517 6809	IC TC74LVX4053FT
IC8195	309 558 7213	IC 24C02CT-I/SNG
IC8196	310 517 6809	IC TC74LVX4053FT
IC8198	309 339 3618	IC 24LC16BT-I/SNG
IC8199	309 672 9018	IC PCA9544APW
IC8401	310 595 8009	IC PQ1LAX95MSPQ
IC9911	309 404 6325	IC M62320FP-DF5J

Electrical Parts List

Key No.	Part No.	Description		
IC9912	309 404 6325	IC M62320FP-DF5J		
IC9913	309 339 3618	IC 24LC16BT-I/SNG		
IC9931	310 595 8009	IC PQ1LAX95MSPQ		
IC9942	409 685 9415	IC MP2307DN		
IC9981	309 536 5514	IC AD8074ARUZ-REEL		
IC9983	309 404 7213	IC TC7SET00FU-(TE85L)		
CAPACITOR				
C1011	303 397 8813	NP-ELECT	4.7U M	16V
C1012	303 332 6317	CERAMIC	180P J	50V
C1013	403 454 6810	CERAMIC	47U M	10V
C1014	403 454 6810	CERAMIC	47U M	10V
C1015	403 454 6810	CERAMIC	47U M	10V
C1016	303 397 8813	NP-ELECT	4.7U M	16V
C1017	303 332 6317	CERAMIC	180P J	50V
C1031	303 381 5613	ELECT	220U M	16V
	403 458 4812	ELECT	220U M	16V
C1032	303 438 0219	CERAMIC	0.1U K	16V
	303 409 3426	CERAMIC	0.1U K	16V
C1033	303 381 5613	ELECT	220U M	16V
	403 458 4812	ELECT	220U M	16V
C1034	303 438 0219	CERAMIC	0.1U K	16V
	303 409 3426	CERAMIC	0.1U K	16V
C1035	303 157 1412	CERAMIC	2P C	50V
C1036	303 279 6210	CERAMIC	10P J	50V
C1037	303 157 1511	CERAMIC	3P C	50V
C1038	303 279 6210	CERAMIC	10P J	50V
C1039	303 157 1511	CERAMIC	3P C	50V
C1041	303 279 6210	CERAMIC	10P J	50V
C1042	303 381 5613	ELECT	220U M	16V
	403 458 4812	ELECT	220U M	16V
C1043	303 438 0219	CERAMIC	0.1U K	16V
	303 409 3426	CERAMIC	0.1U K	16V
C1044	303 381 5613	ELECT	220U M	16V
	403 458 4812	ELECT	220U M	16V
C1045	303 438 0219	CERAMIC	0.1U K	16V
	303 409 3426	CERAMIC	0.1U K	16V
C1046	303 314 5314	CERAMIC	5P C	50V
C1047	303 279 6210	CERAMIC	10P J	50V
C1048	303 314 5314	CERAMIC	5P C	50V
C1049	303 279 6210	CERAMIC	10P J	50V
C1051	303 314 5314	CERAMIC	5P C	50V
C1052	303 279 6210	CERAMIC	10P J	50V
C1053	303 314 5314	CERAMIC	5P C	50V
C1054	303 279 6210	CERAMIC	10P J	50V
C1058	403 454 6810	CERAMIC	47U M	10V
C1059	403 454 6810	CERAMIC	47U M	10V
C1060	403 454 6810	CERAMIC	47U M	10V
C1062	303 381 5613	ELECT	220U M	16V
	403 458 4812	ELECT	220U M	16V
C1063	303 369 0527	CERAMIC	0.01U K	25V
C1065	303 369 0527	CERAMIC	0.01U K	25V
C1066	303 369 0527	CERAMIC	0.01U K	25V
C1067	303 381 5613	ELECT	220U M	16V
	403 458 4812	ELECT	220U M	16V
C1068	303 369 0527	CERAMIC	0.01U K	25V
C1069	303 369 0527	CERAMIC	0.01U K	25V
C1071	303 369 0527	CERAMIC	0.01U K	25V
C1072	303 369 0527	CERAMIC	0.01U K	25V
C1073	303 369 0527	CERAMIC	0.01U K	25V
C1074	303 438 0219	CERAMIC	0.1U K	16V
	303 409 3426	CERAMIC	0.1U K	16V
C1075	303 398 4111	ELECT	47U M	16V
	303 387 6515	ELECT	47U M	16V
C1084	303 438 0219	CERAMIC	0.1U K	16V
	303 409 3426	CERAMIC	0.1U K	16V
C1101	303 398 4111	ELECT	47U M	16V
	303 387 6515	ELECT	47U M	16V
C1102	303 398 4111	ELECT	47U M	16V
	303 387 6515	ELECT	47U M	16V
C1103	303 398 4111	ELECT	47U M	16V
	303 387 6515	ELECT	47U M	16V
C1104	303 438 0219	CERAMIC	0.1U K	16V
	303 409 3426	CERAMIC	0.1U K	16V
C1105	303 438 0219	CERAMIC	0.1U K	16V
	303 409 3426	CERAMIC	0.1U K	16V
C1106	303 438 0219	CERAMIC	0.1U K	16V
	303 409 3426	CERAMIC	0.1U K	16V
C1107	303 438 0219	CERAMIC	0.1U K	16V
	303 409 3426	CERAMIC	0.1U K	16V
C1108	303 438 0219	CERAMIC	0.1U K	16V
	303 409 3426	CERAMIC	0.1U K	16V
C1109	303 438 0219	CERAMIC	0.1U K	16V
	303 409 3426	CERAMIC	0.1U K	16V
C1111	303 438 0219	CERAMIC	0.1U K	16V
	303 409 3426	CERAMIC	0.1U K	16V
C1112	303 438 0219	CERAMIC	0.1U K	16V
	303 409 3426	CERAMIC	0.1U K	16V
C1113	303 438 0219	CERAMIC	0.1U K	16V
	303 409 3426	CERAMIC	0.1U K	16V
C1114	303 438 0219	CERAMIC	0.1U K	16V
	303 409 3426	CERAMIC	0.1U K	16V
C1115	303 438 0219	CERAMIC	0.1U K	16V
	303 409 3426	CERAMIC	0.1U K	16V
C1116	303 438 0219	CERAMIC	0.1U K	16V
	303 409 3426	CERAMIC	0.1U K	16V
C1118	303 398 4111	ELECT	47U M	16V
	303 387 6515	ELECT	47U M	16V
C1119	303 398 4111	ELECT	47U M	16V
	303 387 6515	ELECT	47U M	16V
C1121	303 438 0219	CERAMIC	0.1U K	16V
	303 409 3426	CERAMIC	0.1U K	16V
C1122	303 438 0219	CERAMIC	0.1U K	16V
	303 409 3426	CERAMIC	0.1U K	16V
C1123	303 438 0219	CERAMIC	0.1U K	16V
	303 409 3426	CERAMIC	0.1U K	16V
C1124	303 438 0219	CERAMIC	0.1U K	16V
	303 409 3426	CERAMIC	0.1U K	16V
C1125	303 438 0219	CERAMIC	0.1U K	16V
	303 409 3426	CERAMIC	0.1U K	16V
C1126	303 438 0219	CERAMIC	0.1U K	16V
	303 409 3426	CERAMIC	0.1U K	16V
C1127	303 438 0219	CERAMIC	0.1U K	16V
	303 409 3426	CERAMIC	0.1U K	16V
C1128	303 438 0219	CERAMIC	0.1U K	16V
	303 409 3426	CERAMIC	0.1U K	16V
C1129	303 376 6311	CERAMIC	0.47U K	10V
C1131	303 376 6311	CERAMIC	0.47U K	10V
C1132	303 376 6311	CERAMIC	0.47U K	10V
C1133	303 376 6311	CERAMIC	0.47U K	10V
C1134	303 376 6311	CERAMIC	0.47U K	10V
C1135	303 376 6311	CERAMIC	0.47U K	10V
C1136	303 376 6311	CERAMIC	0.47U K	10V
C1137	303 376 6311	CERAMIC	0.47U K	10V
C1138	303 376 6311	CERAMIC	0.47U K	10V
C1139	303 376 6311	CERAMIC	0.47U K	10V
C1141	303 376 6311	CERAMIC	0.47U K	10V
C1142	303 376 6311	CERAMIC	0.47U K	10V
C1143	303 376 6311	CERAMIC	0.47U K	10V
C1144	303 376 6311	CERAMIC	0.47U K	10V
C1145	303 376 6311	CERAMIC	0.47U K	10V
C1146	303 376 6311	CERAMIC	0.47U K	10V
C1147	303 376 6311	CERAMIC	0.47U K	10V
C1148	303 376 6311	CERAMIC	0.47U K	10V

Electrical Parts List

Key No.	Part No.	Description		
C1149	303 376 6311	CERAMIC	0.47U K	10V
C1151	303 376 6311	CERAMIC	0.47U K	10V
C1152	303 376 6311	CERAMIC	0.47U K	10V
C1153	303 376 6311	CERAMIC	0.47U K	10V
C1154	303 376 6311	CERAMIC	0.47U K	10V
C1155	303 376 6311	CERAMIC	0.47U K	10V
C1156	303 376 6311	CERAMIC	0.47U K	10V
C1157	303 394 1312	ELECT	100U M	6.3V
	303 427 9315	ELECT	100U M	6.3V
	303 387 4917	ELECT	100U M	6.3V
C1158	303 438 0219	CERAMIC	0.1U K	16V
	303 409 3426	CERAMIC	0.1U K	16V
C1159	303 398 4111	ELECT	47U M	16V
	303 387 6515	ELECT	47U M	16V
C1161	303 438 0219	CERAMIC	0.1U K	16V
	303 409 3426	CERAMIC	0.1U K	16V
C1162	303 438 0219	CERAMIC	0.1U K	16V
	303 409 3426	CERAMIC	0.1U K	16V
C1163	303 438 0219	CERAMIC	0.1U K	16V
	303 409 3426	CERAMIC	0.1U K	16V
C1164	303 398 4111	ELECT	47U M	16V
	303 387 6515	ELECT	47U M	16V
C1165	303 438 0219	CERAMIC	0.1U K	16V
	303 409 3426	CERAMIC	0.1U K	16V
C1166	303 438 0219	CERAMIC	0.1U K	16V
	303 409 3426	CERAMIC	0.1U K	16V
C1167	303 376 6311	CERAMIC	0.47U K	10V
C1168	303 438 0219	CERAMIC	0.1U K	16V
	303 409 3426	CERAMIC	0.1U K	16V
C1169	303 376 6311	CERAMIC	0.47U K	10V
C1171	303 376 6311	CERAMIC	0.47U K	10V
C1172	303 376 6311	CERAMIC	0.47U K	10V
C1173	303 376 6311	CERAMIC	0.47U K	10V
C1174	303 376 6311	CERAMIC	0.47U K	10V
C1175	303 376 6311	CERAMIC	0.47U K	10V
C1176	303 376 6311	CERAMIC	0.47U K	10V
C1177	303 376 6311	CERAMIC	0.47U K	10V
C1178	303 376 6311	CERAMIC	0.47U K	10V
C2001	303 442 0519	CERAMIC	0.068U K	16V
C2002	303 438 0219	CERAMIC	0.1U K	16V
	303 409 3426	CERAMIC	0.1U K	16V
C2003	403 455 1012	CERAMIC	1U K	10V
	303 433 1112	CERAMIC	1U K	10V
C2005	303 438 0219	CERAMIC	0.1U K	16V
	303 409 3426	CERAMIC	0.1U K	16V
C2006	303 438 0219	CERAMIC	0.1U K	16V
	303 409 3426	CERAMIC	0.1U K	16V
C2007	303 438 0219	CERAMIC	0.1U K	16V
	303 409 3426	CERAMIC	0.1U K	16V
C2010	303 438 0219	CERAMIC	0.1U K	16V
	303 409 3426	CERAMIC	0.1U K	16V
C2011	303 398 2117	ELECT	330U M	6.3V
	403 468 6318	ELECT	330U M	6.3V
C2012	403 455 1012	CERAMIC	1U K	10V
	303 433 1112	CERAMIC	1U K	10V
C2013	303 439 8412	CERAMIC	2.2U M	6.3V
C2014	303 376 6311	CERAMIC	0.47U K	10V
C2015	403 455 1012	CERAMIC	1U K	10V
	303 433 1112	CERAMIC	1U K	10V
C2016	303 439 8412	CERAMIC	2.2U M	6.3V
C2017	403 455 1012	CERAMIC	1U K	10V
	303 433 1112	CERAMIC	1U K	10V
C2018	403 455 1012	CERAMIC	1U K	10V
	303 433 1112	CERAMIC	1U K	10V
C2019	303 294 6110	CERAMIC	100P J	50V
C2020	303 369 0527	CERAMIC	0.01U K	25V
C2021	303 438 0219	CERAMIC	0.1U K	16V
	303 409 3426	CERAMIC	0.1U K	16V
C2022	303 438 0219	CERAMIC	0.1U K	16V
	303 409 3426	CERAMIC	0.1U K	16V
C2023	303 438 0219	CERAMIC	0.1U K	16V
	303 409 3426	CERAMIC	0.1U K	16V
C2024	303 438 0219	CERAMIC	0.1U K	16V
	303 409 3426	CERAMIC	0.1U K	16V
C2025	303 438 0219	CERAMIC	0.1U K	16V
	303 409 3426	CERAMIC	0.1U K	16V
C2026	303 369 0527	CERAMIC	0.01U K	25V
C2027	303 369 0527	CERAMIC	0.01U K	25V
C2028	303 369 0527	CERAMIC	0.01U K	25V
C2029	303 369 0527	CERAMIC	0.01U K	25V
C2030	303 369 0527	CERAMIC	0.01U K	25V
C2031	303 398 4111	ELECT	47U M	16V
	303 387 6515	ELECT	47U M	16V
C2032	303 439 8412	CERAMIC	2.2U M	6.3V
C2033	303 439 8412	CERAMIC	2.2U M	6.3V
C2034	303 438 0219	CERAMIC	0.1U K	16V
	303 409 3426	CERAMIC	0.1U K	16V
C2035	303 438 0219	CERAMIC	0.1U K	16V
	303 409 3426	CERAMIC	0.1U K	16V
C2036	303 438 0219	CERAMIC	0.1U K	16V
	303 409 3426	CERAMIC	0.1U K	16V
C2037	303 438 0219	CERAMIC	0.1U K	16V
	303 409 3426	CERAMIC	0.1U K	16V
C2038	303 438 0219	CERAMIC	0.1U K	16V
	303 409 3426	CERAMIC	0.1U K	16V
C2039	303 438 0219	CERAMIC	0.1U K	16V
	303 409 3426	CERAMIC	0.1U K	16V
C2041	303 438 0219	CERAMIC	0.1U K	16V
	303 409 3426	CERAMIC	0.1U K	16V
C2042	303 438 0219	CERAMIC	0.1U K	16V
	303 409 3426	CERAMIC	0.1U K	16V
C2043	303 438 0219	CERAMIC	0.1U K	16V
	303 409 3426	CERAMIC	0.1U K	16V
C2044	303 438 0219	CERAMIC	0.1U K	16V
	303 409 3426	CERAMIC	0.1U K	16V
C2045	303 438 0219	CERAMIC	0.1U K	16V
	303 409 3426	CERAMIC	0.1U K	16V
C2046	303 438 0219	CERAMIC	0.1U K	16V
	303 409 3426	CERAMIC	0.1U K	16V
C2047	303 438 0219	CERAMIC	0.1U K	16V
	303 409 3426	CERAMIC	0.1U K	16V
C2048	303 438 0219	CERAMIC	0.1U K	16V
	303 409 3426	CERAMIC	0.1U K	16V
C2049	303 439 8412	CERAMIC	2.2U M	6.3V
C2051	303 439 8412	CERAMIC	2.2U M	6.3V
C2052	303 438 0219	CERAMIC	0.1U K	16V
	303 409 3426	CERAMIC	0.1U K	16V
C2053	303 438 0219	CERAMIC	0.1U K	16V
	303 409 3426	CERAMIC	0.1U K	16V
C2054	303 438 0219	CERAMIC	0.1U K	16V
	303 409 3426	CERAMIC	0.1U K	16V
C2055	303 438 0219	CERAMIC	0.1U K	16V
	303 409 3426	CERAMIC	0.1U K	16V
C2056	303 438 0219	CERAMIC	0.1U K	16V
	303 409 3426	CERAMIC	0.1U K	16V
C2057	303 438 0219	CERAMIC	0.1U K	16V
	303 409 3426	CERAMIC	0.1U K	16V
C2058	303 438 0219	CERAMIC	0.1U K	16V
	303 409 3426	CERAMIC	0.1U K	16V
C2059	303 438 0219	CERAMIC	0.1U K	16V
	303 409 3426	CERAMIC	0.1U K	16V
C2061	303 438 0219	CERAMIC	0.1U K	16V
	303 409 3426	CERAMIC	0.1U K	16V
C2062	303 438 0219	CERAMIC	0.1U K	16V

Electrical Parts List

Key No.	Part No.	Description		
	303 409 3426	CERAMIC	0.1U K	16V
C2063	303 438 0219	CERAMIC	0.1U K	16V
	303 409 3426	CERAMIC	0.1U K	16V
C2064	303 438 0219	CERAMIC	0.1U K	16V
	303 409 3426	CERAMIC	0.1U K	16V
C2065	303 438 0219	CERAMIC	0.1U K	16V
	303 409 3426	CERAMIC	0.1U K	16V
C2066	303 438 0219	CERAMIC	0.1U K	16V
	303 409 3426	CERAMIC	0.1U K	16V
C2067	303 438 0219	CERAMIC	0.1U K	16V
	303 409 3426	CERAMIC	0.1U K	16V
C2068	303 305 8515	CERAMIC	15P J	50V
C2069	303 438 0219	CERAMIC	0.1U K	16V
	303 409 3426	CERAMIC	0.1U K	16V
C2071	303 438 0219	CERAMIC	0.1U K	16V
	303 409 3426	CERAMIC	0.1U K	16V
C2072	303 438 0219	CERAMIC	0.1U K	16V
	303 409 3426	CERAMIC	0.1U K	16V
C2073	303 438 0219	CERAMIC	0.1U K	16V
	303 409 3426	CERAMIC	0.1U K	16V
C2074	303 438 0219	CERAMIC	0.1U K	16V
	303 409 3426	CERAMIC	0.1U K	16V
C2075	303 438 0219	CERAMIC	0.1U K	16V
	303 409 3426	CERAMIC	0.1U K	16V
C2076	303 438 0219	CERAMIC	0.1U K	16V
	303 409 3426	CERAMIC	0.1U K	16V
C2077	303 439 8412	CERAMIC	2.2U M	6.3V
C2078	303 439 8412	CERAMIC	2.2U M	6.3V
C2079	303 439 8412	CERAMIC	2.2U M	6.3V
C2081	303 438 0219	CERAMIC	0.1U K	16V
	303 409 3426	CERAMIC	0.1U K	16V
C2082	303 438 0219	CERAMIC	0.1U K	16V
	303 409 3426	CERAMIC	0.1U K	16V
C2083	303 438 0219	CERAMIC	0.1U K	16V
	303 409 3426	CERAMIC	0.1U K	16V
C2084	303 438 0219	CERAMIC	0.1U K	16V
	303 409 3426	CERAMIC	0.1U K	16V
C2085	303 438 0219	CERAMIC	0.1U K	16V
	303 409 3426	CERAMIC	0.1U K	16V
C2086	303 438 0219	CERAMIC	0.1U K	16V
	303 409 3426	CERAMIC	0.1U K	16V
C2087	303 439 8412	CERAMIC	2.2U M	6.3V
C2088	303 439 8412	CERAMIC	2.2U M	6.3V
C2089	303 439 8412	CERAMIC	2.2U M	6.3V
C2092	303 438 0219	CERAMIC	0.1U K	16V
	303 409 3426	CERAMIC	0.1U K	16V
C2093	303 438 0219	CERAMIC	0.1U K	16V
	303 409 3426	CERAMIC	0.1U K	16V
C2094	303 438 0219	CERAMIC	0.1U K	16V
	303 409 3426	CERAMIC	0.1U K	16V
C2095	303 439 8412	CERAMIC	2.2U M	6.3V
C2096	303 439 8412	CERAMIC	2.2U M	6.3V
C2097	303 439 8412	CERAMIC	2.2U M	6.3V
C2098	303 438 0219	CERAMIC	0.1U K	16V
	303 409 3426	CERAMIC	0.1U K	16V
C2099	303 438 0219	CERAMIC	0.1U K	16V
	303 409 3426	CERAMIC	0.1U K	16V
C2100	303 438 0219	CERAMIC	0.1U K	16V
	303 409 3426	CERAMIC	0.1U K	16V
C2101	303 442 0519	CERAMIC	0.068U K	16V
C2102	303 438 0219	CERAMIC	0.1U K	16V
	303 409 3426	CERAMIC	0.1U K	16V
C2103	403 455 1012	CERAMIC	1U K	10V
	303 433 1112	CERAMIC	1U K	10V
C2105	303 438 0219	CERAMIC	0.1U K	16V
	303 409 3426	CERAMIC	0.1U K	16V
C3011	303 157 1511	CERAMIC	3P C	50V

Key No.	Part No.	Description		
C3012	303 279 6210	CERAMIC	10P J	50V
C3013	303 157 1511	CERAMIC	3P C	50V
C3014	303 279 6210	CERAMIC	10P J	50V
C3015	303 438 0219	CERAMIC	0.1U K	16V
	303 409 3426	CERAMIC	0.1U K	16V
C3016	303 420 4812	CERAMIC	10U K	10V
C3017	303 358 3215	CERAMIC	10U K	6.3V
	303 368 7319	CERAMIC	10U K	6.3V
C3101	303 438 0219	CERAMIC	0.1U K	16V
	303 409 3426	CERAMIC	0.1U K	16V
C3102	303 438 0219	CERAMIC	0.1U K	16V
	303 409 3426	CERAMIC	0.1U K	16V
C3103	303 438 0219	CERAMIC	0.1U K	16V
	303 409 3426	CERAMIC	0.1U K	16V
C3104	303 381 5613	ELECT	220U M	16V
	403 458 4812	ELECT	220U M	16V
C3105	303 438 0219	CERAMIC	0.1U K	16V
	303 409 3426	CERAMIC	0.1U K	16V
C3106	303 438 0219	CERAMIC	0.1U K	16V
	303 409 3426	CERAMIC	0.1U K	16V
C3107	303 394 1312	ELECT	100U M	6.3V
	303 427 9315	ELECT	100U M	6.3V
	303 387 4917	ELECT	100U M	6.3V
C3108	303 438 0219	CERAMIC	0.1U K	16V
	303 409 3426	CERAMIC	0.1U K	16V
C3111	303 438 0219	CERAMIC	0.1U K	16V
	303 409 3426	CERAMIC	0.1U K	16V
C3112	303 438 0219	CERAMIC	0.1U K	16V
	303 409 3426	CERAMIC	0.1U K	16V
C3113	303 438 0219	CERAMIC	0.1U K	16V
	303 409 3426	CERAMIC	0.1U K	16V
C3117	303 438 0219	CERAMIC	0.1U K	16V
	303 409 3426	CERAMIC	0.1U K	16V
C3151	303 398 2216	ELECT	470U M	6.3V
C3152	303 438 0219	CERAMIC	0.1U K	16V
	303 409 3426	CERAMIC	0.1U K	16V
C3153	303 438 0219	CERAMIC	0.1U K	16V
	303 409 3426	CERAMIC	0.1U K	16V
C3154	303 438 0219	CERAMIC	0.1U K	16V
	303 409 3426	CERAMIC	0.1U K	16V
C3155	303 438 0219	CERAMIC	0.1U K	16V
	303 409 3426	CERAMIC	0.1U K	16V
C3156	303 438 0219	CERAMIC	0.1U K	16V
	303 409 3426	CERAMIC	0.1U K	16V
C3157	303 438 0219	CERAMIC	0.1U K	16V
	303 409 3426	CERAMIC	0.1U K	16V
C3158	303 438 0219	CERAMIC	0.1U K	16V
	303 409 3426	CERAMIC	0.1U K	16V
C3159	303 438 0219	CERAMIC	0.1U K	16V
	303 409 3426	CERAMIC	0.1U K	16V
C3161	303 438 0219	CERAMIC	0.1U K	16V
	303 409 3426	CERAMIC	0.1U K	16V
C3162	403 455 1012	CERAMIC	1U K	10V
	303 433 1112	CERAMIC	1U K	10V
C3163	303 358 3215	CERAMIC	10U K	6.3V
	303 368 7319	CERAMIC	10U K	6.3V
C3181	403 455 1012	CERAMIC	1U K	10V
	303 433 1112	CERAMIC	1U K	10V
C4101	303 394 1312	ELECT	100U M	6.3V
	303 427 9315	ELECT	100U M	6.3V
	303 387 4917	ELECT	100U M	6.3V
C4102	303 438 0219	CERAMIC	0.1U K	16V
	303 409 3426	CERAMIC	0.1U K	16V
C4103	303 438 0219	CERAMIC	0.1U K	16V
	303 409 3426	CERAMIC	0.1U K	16V
C4104	303 438 0219	CERAMIC	0.1U K	16V
	303 409 3426	CERAMIC	0.1U K	16V

Electrical Parts List

Key No.	Part No.	Description		
C4105	303 438 0219	CERAMIC	0.1U K	16V
	303 409 3426	CERAMIC	0.1U K	16V
C4106	303 438 0219	CERAMIC	0.1U K	16V
	303 409 3426	CERAMIC	0.1U K	16V
C4107	303 438 0219	CERAMIC	0.1U K	16V
	303 409 3426	CERAMIC	0.1U K	16V
C4108	303 438 0219	CERAMIC	0.1U K	16V
	303 409 3426	CERAMIC	0.1U K	16V
C4109	303 438 0219	CERAMIC	0.1U K	16V
	303 409 3426	CERAMIC	0.1U K	16V
C4131	403 455 1012	CERAMIC	1U K	10V
	303 433 1112	CERAMIC	1U K	10V
C4132	303 358 3215	CERAMIC	10U K	6.3V
	303 368 7319	CERAMIC	10U K	6.3V
C4133	303 358 3215	CERAMIC	10U K	6.3V
	303 368 7319	CERAMIC	10U K	6.3V
C4141	403 455 1012	CERAMIC	1U K	10V
	303 433 1112	CERAMIC	1U K	10V
C4142	303 438 0219	CERAMIC	0.1U K	16V
	303 409 3426	CERAMIC	0.1U K	16V
C4151	403 455 1012	CERAMIC	1U K	10V
	303 433 1112	CERAMIC	1U K	10V
C4152	303 358 3215	CERAMIC	10U K	6.3V
	303 368 7319	CERAMIC	10U K	6.3V
C4161	403 455 1012	CERAMIC	1U K	10V
	303 433 1112	CERAMIC	1U K	10V
C4162	303 438 0219	CERAMIC	0.1U K	16V
	303 409 3426	CERAMIC	0.1U K	16V
C4163	303 358 3215	CERAMIC	10U K	6.3V
	303 368 7319	CERAMIC	10U K	6.3V
C4173	303 438 0219	CERAMIC	0.1U K	16V
	303 409 3426	CERAMIC	0.1U K	16V
C4174	303 394 1312	ELECT	100U M	6.3V
	303 427 9315	ELECT	100U M	6.3V
	303 387 4917	ELECT	100U M	6.3V
C4176	303 438 0219	CERAMIC	0.1U K	16V
	303 409 3426	CERAMIC	0.1U K	16V
C4177	303 394 1312	ELECT	100U M	6.3V
	303 427 9315	ELECT	100U M	6.3V
	303 387 4917	ELECT	100U M	6.3V
C4178	303 438 0219	CERAMIC	0.1U K	16V
	303 409 3426	CERAMIC	0.1U K	16V
C4179	303 394 1312	ELECT	100U M	6.3V
	303 427 9315	ELECT	100U M	6.3V
	303 387 4917	ELECT	100U M	6.3V
C4181	303 438 0219	CERAMIC	0.1U K	16V
	303 409 3426	CERAMIC	0.1U K	16V
C4182	303 394 1312	ELECT	100U M	6.3V
	303 427 9315	ELECT	100U M	6.3V
	303 387 4917	ELECT	100U M	6.3V
C4183	303 438 0219	CERAMIC	0.1U K	16V
	303 409 3426	CERAMIC	0.1U K	16V
C4184	303 394 1312	ELECT	100U M	6.3V
	303 427 9315	ELECT	100U M	6.3V
	303 387 4917	ELECT	100U M	6.3V
C8001	303 358 3215	CERAMIC	10U K	6.3V
	303 368 7319	CERAMIC	10U K	6.3V
C8003	303 438 0219	CERAMIC	0.1U K	16V
	303 409 3426	CERAMIC	0.1U K	16V
C8004	303 294 6110	CERAMIC	100P J	50V
C8005	303 438 0219	CERAMIC	0.1U K	16V
	303 409 3426	CERAMIC	0.1U K	16V
C8006	303 438 0219	CERAMIC	0.1U K	16V
	303 409 3426	CERAMIC	0.1U K	16V
C8007	303 438 0219	CERAMIC	0.1U K	16V
	303 409 3426	CERAMIC	0.1U K	16V
C8008	303 294 6110	CERAMIC	100P J	50V
C8009	303 438 0219	CERAMIC	0.1U K	16V
	303 409 3426	CERAMIC	0.1U K	16V
C8010	303 438 0219	CERAMIC	0.1U K	16V
	303 409 3426	CERAMIC	0.1U K	16V
C8011	303 358 3215	CERAMIC	10U K	6.3V
	303 368 7319	CERAMIC	10U K	6.3V
C8012	303 438 0219	CERAMIC	0.1U K	16V
	303 409 3426	CERAMIC	0.1U K	16V
C8013	303 294 6110	CERAMIC	100P J	50V
C8014	303 438 0219	CERAMIC	0.1U K	16V
	303 409 3426	CERAMIC	0.1U K	16V
C8015	303 358 3215	CERAMIC	10U K	6.3V
	303 368 7319	CERAMIC	10U K	6.3V
C8016	303 438 0219	CERAMIC	0.1U K	16V
	303 409 3426	CERAMIC	0.1U K	16V
C8017	303 358 3215	CERAMIC	10U K	6.3V
	303 368 7319	CERAMIC	10U K	6.3V
C8018	303 438 0219	CERAMIC	0.1U K	16V
	303 409 3426	CERAMIC	0.1U K	16V
C8019	303 438 0219	CERAMIC	0.1U K	16V
	303 409 3426	CERAMIC	0.1U K	16V
C8021	303 438 0219	CERAMIC	0.1U K	16V
	303 409 3426	CERAMIC	0.1U K	16V
C8022	303 438 0219	CERAMIC	0.1U K	16V
	303 409 3426	CERAMIC	0.1U K	16V
C8023	303 438 0219	CERAMIC	0.1U K	16V
	303 409 3426	CERAMIC	0.1U K	16V
C8024	303 394 1312	ELECT	100U M	6.3V
	303 427 9315	ELECT	100U M	6.3V
	303 387 4917	ELECT	100U M	6.3V
C8025	303 358 3215	CERAMIC	10U K	6.3V
	303 368 7319	CERAMIC	10U K	6.3V
C8026	303 397 8813	NP-ELECT	4.7U M	16V
C8027	303 438 0219	CERAMIC	0.1U K	16V
	303 409 3426	CERAMIC	0.1U K	16V
C8028	403 455 1012	CERAMIC	1U K	10V
	303 433 1112	CERAMIC	1U K	10V
C8029	403 455 1012	CERAMIC	1U K	10V
	303 433 1112	CERAMIC	1U K	10V
C8030	303 438 0219	CERAMIC	0.1U K	16V
	303 409 3426	CERAMIC	0.1U K	16V
C8032	303 397 9018	NP-ELECT	1.0U M	50V
C8033	303 439 8412	CERAMIC	2.2U M	6.3V
C8034	403 455 1012	CERAMIC	1U K	10V
	303 433 1112	CERAMIC	1U K	10V
C8035	303 294 6110	CERAMIC	100P J	50V
C8036	303 438 0219	CERAMIC	0.1U K	16V
	303 409 3426	CERAMIC	0.1U K	16V
C8037	303 398 2117	ELECT	330U M	6.3V
	403 468 6318	ELECT	330U M	6.3V
C8038	303 438 0219	CERAMIC	0.1U K	16V
	303 409 3426	CERAMIC	0.1U K	16V
C8039	303 438 0219	CERAMIC	0.1U K	16V
	303 409 3426	CERAMIC	0.1U K	16V
C8040	303 438 0219	CERAMIC	0.1U K	16V
	303 409 3426	CERAMIC	0.1U K	16V
C8041	303 397 8516	NP-ELECT	10U M	10V
C8043	303 438 0219	CERAMIC	0.1U K	16V
	303 409 3426	CERAMIC	0.1U K	16V
C8044	303 397 9018	NP-ELECT	1.0U M	50V
C8045	403 457 2017	CERAMIC	0.056U K	16V
C8046	303 442 0410	CERAMIC	0.022U K	25V
C8047	303 315 6310	CERAMIC	820P K	50V
C8048	303 441 9810	CERAMIC	0.01U K	50V
C8049	303 398 6115	ELECT	1U M	50V
C8052	303 438 0219	CERAMIC	0.1U K	16V
	303 409 3426	CERAMIC	0.1U K	16V

Electrical Parts List

Key No.	Part No.	Description		
C8053	303 438 0219	CERAMIC	0.1U K	16V
	303 409 3426	CERAMIC	0.1U K	16V
C8054	303 294 6110	CERAMIC	100P J	50V
C8055	303 294 6110	CERAMIC	100P J	50V
C8056	303 294 6110	CERAMIC	100P J	50V
C8057	303 294 6110	CERAMIC	100P J	50V
C8058	303 294 6110	CERAMIC	100P J	50V
C8061	303 438 0219	CERAMIC	0.1U K	16V
	303 409 3426	CERAMIC	0.1U K	16V
C8062	303 157 1511	CERAMIC	3P C	50V
C8063	303 438 0219	CERAMIC	0.1U K	16V
	303 409 3426	CERAMIC	0.1U K	16V
C8064	303 279 6210	CERAMIC	10P J	50V
C8065	303 305 8911	CERAMIC	56P J	50V
C8070	303 398 2216	ELECT	470U M	6.3V
C8071	303 157 1412	CERAMIC	2P C	50V
C8072	303 279 6210	CERAMIC	10P J	50V
C8073	303 438 0219	CERAMIC	0.1U K	16V
	303 409 3426	CERAMIC	0.1U K	16V
C8075	303 305 8911	CERAMIC	56P J	50V
C8076	303 438 0219	CERAMIC	0.1U K	16V
	303 409 3426	CERAMIC	0.1U K	16V
C8077	303 438 0219	CERAMIC	0.1U K	16V
	303 409 3426	CERAMIC	0.1U K	16V
C8079	303 438 0219	CERAMIC	0.1U K	16V
	303 409 3426	CERAMIC	0.1U K	16V
C8081	303 157 1511	CERAMIC	3P C	50V
C8082	303 279 6210	CERAMIC	10P J	50V
C8085	303 305 8911	CERAMIC	56P J	50V
C8086	303 438 0219	CERAMIC	0.1U K	16V
	303 409 3426	CERAMIC	0.1U K	16V
C8088	303 438 0219	CERAMIC	0.1U K	16V
	303 409 3426	CERAMIC	0.1U K	16V
C8089	303 438 0219	CERAMIC	0.1U K	16V
	303 409 3426	CERAMIC	0.1U K	16V
C8091	303 397 8516	NP-ELECT	10U M	10V
C8092	303 397 8516	NP-ELECT	10U M	10V
C8093	303 332 6317	CERAMIC	180P J	50V
C8094	303 304 5515	CERAMIC	1200P K	50V
C8095	303 294 6110	CERAMIC	100P J	50V
C8096	303 294 6110	CERAMIC	100P J	50V
C8097	303 294 6110	CERAMIC	100P J	50V
C8098	303 294 6110	CERAMIC	100P J	50V
C8099	303 294 6110	CERAMIC	100P J	50V
C8121	303 438 0219	CERAMIC	0.1U K	16V
	303 409 3426	CERAMIC	0.1U K	16V
C8132	403 455 1012	CERAMIC	1U K	10V
	303 433 1112	CERAMIC	1U K	10V
C8133	303 438 0219	CERAMIC	0.1U K	16V
	303 409 3426	CERAMIC	0.1U K	16V
C8134	303 358 3215	CERAMIC	10U K	6.3V
	303 368 7319	CERAMIC	10U K	6.3V
C8151	303 438 0219	CERAMIC	0.1U K	16V
	303 409 3426	CERAMIC	0.1U K	16V
C8152	303 314 5314	CERAMIC	5P C	50V
C8153	303 279 6210	CERAMIC	10P J	50V
C8171	303 398 2117	ELECT	330U M	6.3V
	403 468 6318	ELECT	330U M	6.3V
C8172	303 438 0219	CERAMIC	0.1U K	16V
	303 409 3426	CERAMIC	0.1U K	16V
C8173	303 438 0219	CERAMIC	0.1U K	16V
	303 409 3426	CERAMIC	0.1U K	16V
C8174	303 381 5613	ELECT	220U M	16V
	403 458 4812	ELECT	220U M	16V
C8175	303 438 0219	CERAMIC	0.1U K	16V
	303 409 3426	CERAMIC	0.1U K	16V
C8176	303 398 2117	ELECT	330U M	6.3V
	403 468 6318	ELECT	330U M	6.3V
C8177	303 438 0219	CERAMIC	0.1U K	16V
	303 409 3426	CERAMIC	0.1U K	16V
C8178	303 381 5613	ELECT	220U M	16V
	403 458 4812	ELECT	220U M	16V
C8179	303 398 4111	ELECT	47U M	16V
	303 387 6515	ELECT	47U M	16V
C8181	303 438 0219	CERAMIC	0.1U K	16V
	303 409 3426	CERAMIC	0.1U K	16V
C8182	303 438 0219	CERAMIC	0.1U K	16V
	303 409 3426	CERAMIC	0.1U K	16V
C8184	303 438 0219	CERAMIC	0.1U K	16V
	303 409 3426	CERAMIC	0.1U K	16V
C8188	303 438 0219	CERAMIC	0.1U K	16V
	303 409 3426	CERAMIC	0.1U K	16V
C8189	303 438 0219	CERAMIC	0.1U K	16V
	303 409 3426	CERAMIC	0.1U K	16V
C8190	303 438 0219	CERAMIC	0.1U K	16V
	303 409 3426	CERAMIC	0.1U K	16V
C8196	303 438 0219	CERAMIC	0.1U K	16V
	303 409 3426	CERAMIC	0.1U K	16V
C8301	303 438 0219	CERAMIC	0.1U K	16V
	303 409 3426	CERAMIC	0.1U K	16V
C8302	303 438 0219	CERAMIC	0.1U K	16V
	303 409 3426	CERAMIC	0.1U K	16V
C8303	303 438 0219	CERAMIC	0.1U K	16V
	303 409 3426	CERAMIC	0.1U K	16V
C8304	303 438 0219	CERAMIC	0.1U K	16V
	303 409 3426	CERAMIC	0.1U K	16V
C8305	303 438 0219	CERAMIC	0.1U K	16V
	303 409 3426	CERAMIC	0.1U K	16V
C8306	303 438 0219	CERAMIC	0.1U K	16V
	303 409 3426	CERAMIC	0.1U K	16V
C8307	303 438 0219	CERAMIC	0.1U K	16V
	303 409 3426	CERAMIC	0.1U K	16V
C8401	403 455 1012	CERAMIC	1U K	10V
	303 433 1112	CERAMIC	1U K	10V
C8402	303 358 3215	CERAMIC	10U K	6.3V
	303 368 7319	CERAMIC	10U K	6.3V
C9911	303 438 0219	CERAMIC	0.1U K	16V
	303 409 3426	CERAMIC	0.1U K	16V
C9912	303 438 0219	CERAMIC	0.1U K	16V
	303 409 3426	CERAMIC	0.1U K	16V
C9913	303 438 0219	CERAMIC	0.1U K	16V
	303 409 3426	CERAMIC	0.1U K	16V
C9931	303 358 3215	CERAMIC	10U K	6.3V
	303 368 7319	CERAMIC	10U K	6.3V
C9932	303 396 9613	CERAMIC	1U K	25V
C9933	303 438 0219	CERAMIC	0.1U K	16V
	303 409 3426	CERAMIC	0.1U K	16V
C9934	303 438 0219	CERAMIC	0.1U K	16V
	303 409 3426	CERAMIC	0.1U K	16V
C9938	303 369 0527	CERAMIC	0.01U K	25V
C9939	303 438 0219	CERAMIC	0.1U K	16V
	303 409 3426	CERAMIC	0.1U K	16V
C9941	403 454 6810	CERAMIC	47U M	10V
C9947	303 438 0219	CERAMIC	0.1U K	16V
	303 409 3426	CERAMIC	0.1U K	16V
C9948	403 455 1616	CERAMIC	10U K	16V
C9949	403 455 1616	CERAMIC	10U K	16V
C9981	303 381 5613	ELECT	220U M	16V
	403 458 4812	ELECT	220U M	16V
C9982	303 381 5613	ELECT	220U M	16V
	403 458 4812	ELECT	220U M	16V
C9983	303 369 0527	CERAMIC	0.01U K	25V
C9984	303 369 0527	CERAMIC	0.01U K	25V
C9985	303 369 0527	CERAMIC	0.01U K	25V

Electrical Parts List

Key No.	Part No.	Description		
C9986	303 369 0527	CERAMIC	0.01U K	25V
C9987	303 369 0527	CERAMIC	0.01U K	25V
C9988	303 369 0527	CERAMIC	0.01U K	25V
RESISTOR				
R1001	301 258 2611	MT-GLAZE	150 FA	1/10W
R1002	301 258 2611	MT-GLAZE	150 FA	1/10W
R1003	301 224 8913	MT-GLAZE	100K JA	1/16W
R1004	301 258 2611	MT-GLAZE	150 FA	1/10W
R1005	301 258 2611	MT-GLAZE	150 FA	1/10W
R1006	301 224 8913	MT-GLAZE	100K JA	1/16W
R1007	301 258 2611	MT-GLAZE	150 FA	1/10W
R1008	301 258 2611	MT-GLAZE	150 FA	1/10W
R1009	301 224 8913	MT-GLAZE	100K JA	1/16W
R1011	301 225 1418	MT-GLAZE	47K JA	1/16W
R1012	301 226 1516	MT-GLAZE	0.000 ZA	1/16W
R1013	301 224 8913	MT-GLAZE	100K JA	1/16W
R1016	301 225 1418	MT-GLAZE	47K JA	1/16W
R1017	301 226 1516	MT-GLAZE	0.000 ZA	1/16W
R1018	301 224 8913	MT-GLAZE	100K JA	1/16W
R1021	301 256 1210	MT-GLAZE	130 JA	1/10W
R1022	301 256 1210	MT-GLAZE	130 JA	1/10W
R1023	301 256 1210	MT-GLAZE	130 JA	1/10W
R1024	301 256 1210	MT-GLAZE	130 JA	1/10W
R1025	301 224 9019	MT-GLAZE	10K JA	1/16W
R1026	301 224 9019	MT-GLAZE	10K JA	1/16W
R1027	301 224 9019	MT-GLAZE	10K JA	1/16W
R1028	301 224 9019	MT-GLAZE	10K JA	1/16W
R1031	301 226 2414	MT-GLAZE	560 JA	1/16W
R1032	301 224 9316	MT-GLAZE	1K JA	1/16W
R1034	301 226 2414	MT-GLAZE	560 JA	1/16W
R1035	301 224 9316	MT-GLAZE	1K JA	1/16W
R1037	301 226 2414	MT-GLAZE	560 JA	1/16W
R1038	301 224 9316	MT-GLAZE	1K JA	1/16W
R1041	301 226 2414	MT-GLAZE	560 JA	1/16W
R1042	301 224 9316	MT-GLAZE	1K JA	1/16W
R1044	301 226 2414	MT-GLAZE	560 JA	1/16W
R1045	301 224 9316	MT-GLAZE	1K JA	1/16W
R1047	301 226 2414	MT-GLAZE	560 JA	1/16W
R1048	301 224 9316	MT-GLAZE	1K JA	1/16W
R1051	301 225 1616	MT-GLAZE	390 JA	1/16W
R1052	301 224 9316	MT-GLAZE	1K JA	1/16W
R1053	301 224 9316	MT-GLAZE	1K JA	1/16W
R1054	301 225 8110	MT-GLAZE	10 JA	1/16W
R1058	301 225 1418	MT-GLAZE	47K JA	1/16W
R1059	301 225 1418	MT-GLAZE	47K JA	1/16W
R1060	301 225 1418	MT-GLAZE	47K JA	1/16W
R1061	301 226 1516	MT-GLAZE	0.000 ZA	1/16W
R1062	301 226 1516	MT-GLAZE	0.000 ZA	1/16W
R1063	301 226 1516	MT-GLAZE	0.000 ZA	1/16W
R1064	301 226 1516	MT-GLAZE	0.000 ZA	1/16W
R1065	301 226 1516	MT-GLAZE	0.000 ZA	1/16W
R1066	301 226 1516	MT-GLAZE	0.000 ZA	1/16W
R1067	301 226 1516	MT-GLAZE	0.000 ZA	1/16W
R1069	301 224 9514	MT-GLAZE	2.2K JA	1/16W
R1071	301 226 1516	MT-GLAZE	0.000 ZA	1/16W
R1072	301 226 1516	MT-GLAZE	0.000 ZA	1/16W
R1073	301 226 1516	MT-GLAZE	0.000 ZA	1/16W
R1101	301 298 5412	MT-GLAZE	39K FA	1/16W
R1102	301 299 2410	MT-GLAZE	5.6K FA	1/16W
R1103	301 229 3913	MT-GLAZE	180 JA	1/16W
R1104	301 237 2915	MT-GLAZE	51 JA	1/16W
R1105	301 336 8818	MT-GLAZE	6.8K FA	1/16W
R1106	301 301 8218	MT-GLAZE	680 FA	1/16W
R1107	301 226 1516	MT-GLAZE	0.000 ZA	1/16W
R1109	301 294 3115	MT-GLAZE	1K FA	1/16W
R1111	301 226 1516	MT-GLAZE	0.000 ZA	1/16W
R1113	301 294 3115	MT-GLAZE	1K FA	1/16W
R1114	301 294 3115	MT-GLAZE	1K FA	1/16W
R1115	301 224 9316	MT-GLAZE	1K JA	1/16W
R1116	301 263 6928	MT-GLAZE	2K JA	1/16W
R1117	301 225 0312	MT-GLAZE	33 JA	1/16W
R1118	301 225 0312	MT-GLAZE	33 JA	1/16W
R1119	301 225 0312	MT-GLAZE	33 JA	1/16W
R1121	301 225 0312	MT-GLAZE	33 JA	1/16W
R1122	301 225 0312	MT-GLAZE	33 JA	1/16W
R1123	301 225 0312	MT-GLAZE	33 JA	1/16W
R1124	301 225 0312	MT-GLAZE	33 JA	1/16W
R1125	301 225 0312	MT-GLAZE	33 JA	1/16W
R1126	301 225 0312	MT-GLAZE	33 JA	1/16W
R1127	301 225 8011	MT-GLAZE	330 JA	1/16W
R1128	301 225 8011	MT-GLAZE	330 JA	1/16W
R1129	301 225 8011	MT-GLAZE	330 JA	1/16W
R1131	301 225 8011	MT-GLAZE	330 JA	1/16W
R1132	301 225 0312	MT-GLAZE	33 JA	1/16W
R1133	301 225 0312	MT-GLAZE	33 JA	1/16W
R1134	301 225 0312	MT-GLAZE	33 JA	1/16W
R1135	301 294 2613	MT-GLAZE	4.7K FA	1/16W
R1136	301 302 5414	MT-GLAZE	220 FA	1/16W
R1137	301 294 2613	MT-GLAZE	4.7K FA	1/16W
R1141	301 225 0312	MT-GLAZE	33 JA	1/16W
R1142	301 224 9019	MT-GLAZE	10K JA	1/16W
R1181	301 263 6928	MT-GLAZE	2K JA	1/16W
R1182	301 224 9316	MT-GLAZE	1K JA	1/16W
R1183	301 226 1516	MT-GLAZE	0.000 ZA	1/16W
R1184	301 301 3510	MT-GLAZE	200 JA	1/16W
R1185	301 225 8011	MT-GLAZE	330 JA	1/16W
R1186	301 226 1516	MT-GLAZE	0.000 ZA	1/16W
R1187	301 224 9118	MT-GLAZE	150 JA	1/16W
R1191	301 224 8814	MT-GLAZE	100 JA	1/16W
R1192	301 225 1210	MT-GLAZE	4.7K JA	1/16W
R1193	301 224 8814	MT-GLAZE	100 JA	1/16W
R1194	301 225 1210	MT-GLAZE	4.7K JA	1/16W
R1195	301 226 1516	MT-GLAZE	0.000 ZA	1/16W
R1196	301 226 1516	MT-GLAZE	0.000 ZA	1/16W
R1222	301 225 0817	MT-GLAZE	68K JA	1/16W
R2001	301 226 1516	MT-GLAZE	0.000 ZA	1/16W
R2002	301 224 8913	MT-GLAZE	100K JA	1/16W
R2003	301 224 9316	MT-GLAZE	1K JA	1/16W
R2004	301 224 9316	MT-GLAZE	1K JA	1/16W
R2005	301 224 9316	MT-GLAZE	1K JA	1/16W
R2006	301 224 9316	MT-GLAZE	1K JA	1/16W
R2007	301 224 9316	MT-GLAZE	1K JA	1/16W
R2009	301 226 1516	MT-GLAZE	0.000 ZA	1/16W
R2011	301 226 1516	MT-GLAZE	0.000 ZA	1/16W
R2012	301 224 9415	MT-GLAZE	1M JA	1/16W
R2013	301 224 9415	MT-GLAZE	1M JA	1/16W
R2014	301 226 1516	MT-GLAZE	0.000 ZA	1/16W
R2015	301 226 1516	MT-GLAZE	0.000 ZA	1/16W
R2018	301 224 9019	MT-GLAZE	10K JA	1/16W
R2019	301 225 0114	MT-GLAZE	27K JA	1/16W
R2021	301 035 4111	MT-GLAZE	0.000 ZA	1/8W
R2022	301 224 9019	MT-GLAZE	10K JA	1/16W
R2031	301 225 1814	MT-GLAZE	47 JA	1/16W
R2032	301 225 1814	MT-GLAZE	47 JA	1/16W
R2033	301 224 9019	MT-GLAZE	10K JA	1/16W
R2034	301 294 3016	MT-GLAZE	10K FA	1/16W
R2035	301 226 1516	MT-GLAZE	0.000 ZA	1/16W
R2037	301 226 1516	MT-GLAZE	0.000 ZA	1/16W
R2038	301 225 0817	MT-GLAZE	68K JA	1/16W
R2039	301 225 1814	MT-GLAZE	47 JA	1/16W
R2041	301 225 0411	MT-GLAZE	330K JA	1/16W
R2042	301 225 0411	MT-GLAZE	330K JA	1/16W
R2043	301 225 0411	MT-GLAZE	330K JA	1/16W

Electrical Parts List

Key No.	Part No.	Description		
R2048	301 225 1814	MT-GLAZE	47 JA	1/16W
R2049	301 225 1814	MT-GLAZE	47 JA	1/16W
R2051	301 225 1814	MT-GLAZE	47 JA	1/16W
R2055	301 224 9316	MT-GLAZE	1K JA	1/16W
R2058	301 225 8110	MT-GLAZE	10 JA	1/16W
R2059	301 224 9316	MT-GLAZE	1K JA	1/16W
R2063	301 225 8110	MT-GLAZE	10 JA	1/16W
R2064	301 224 9316	MT-GLAZE	1K JA	1/16W
R2065	301 225 8110	MT-GLAZE	10 JA	1/16W
R2066	301 224 9316	MT-GLAZE	1K JA	1/16W
R2067	301 225 8110	MT-GLAZE	10 JA	1/16W
R2068	301 224 9316	MT-GLAZE	1K JA	1/16W
R2071	301 225 1616	MT-GLAZE	390 JA	1/16W
R2072	301 225 1616	MT-GLAZE	390 JA	1/16W
R2073	301 225 1616	MT-GLAZE	390 JA	1/16W
R2074	301 226 1516	MT-GLAZE	0.000 ZA	1/16W
R2075	301 225 8011	MT-GLAZE	330 JA	1/16W
R2076	301 225 8011	MT-GLAZE	330 JA	1/16W
R2077	301 225 8011	MT-GLAZE	330 JA	1/16W
R2078	301 225 8011	MT-GLAZE	330 JA	1/16W
R2079	301 225 8011	MT-GLAZE	330 JA	1/16W
R2081	301 225 8011	MT-GLAZE	330 JA	1/16W
R2101	301 226 1516	MT-GLAZE	0.000 ZA	1/16W
R2102	301 224 8913	MT-GLAZE	100K JA	1/16W
R2103	301 224 9316	MT-GLAZE	1K JA	1/16W
R2104	301 224 9316	MT-GLAZE	1K JA	1/16W
R2105	301 224 9316	MT-GLAZE	1K JA	1/16W
R2106	301 224 9316	MT-GLAZE	1K JA	1/16W
R2107	301 224 9316	MT-GLAZE	1K JA	1/16W
R2108	301 224 8814	MT-GLAZE	100 JA	1/16W
R3001	301 037 5017	MT-GLAZE	0.000 ZA	1/10W
R3002	301 037 5017	MT-GLAZE	0.000 ZA	1/10W
R3003	301 258 2611	MT-GLAZE	150 FA	1/10W
R3004	301 258 2611	MT-GLAZE	150 FA	1/10W
R3005	301 258 2611	MT-GLAZE	150 FA	1/10W
R3006	301 258 2611	MT-GLAZE	150 FA	1/10W
R3011	301 226 2414	MT-GLAZE	560 JA	1/16W
R3012	301 224 9316	MT-GLAZE	1K JA	1/16W
R3014	301 226 2414	MT-GLAZE	560 JA	1/16W
R3015	301 224 9316	MT-GLAZE	1K JA	1/16W
R3017	301 224 8814	MT-GLAZE	100 JA	1/16W
R3018	301 225 0213	MT-GLAZE	3.3K JA	1/16W
R3021	301 037 5017	MT-GLAZE	0.000 ZA	1/10W
R3022	301 226 1516	MT-GLAZE	0.000 ZA	1/16W
R3023	301 226 1516	MT-GLAZE	0.000 ZA	1/16W
R3102	301 224 9019	MT-GLAZE	10K JA	1/16W
R3104	301 224 9019	MT-GLAZE	10K JA	1/16W
R3105	301 225 2019	MT-GLAZE	680 JA	1/16W
R3107	301 224 9019	MT-GLAZE	10K JA	1/16W
R3108	301 037 5017	MT-GLAZE	0.000 ZA	1/10W
R3109	301 263 7420	MT-GLAZE	75 JA	1/16W
R3111	301 263 7420	MT-GLAZE	75 JA	1/16W
R3112	301 263 7420	MT-GLAZE	75 JA	1/16W
R3113	301 224 9316	MT-GLAZE	1K JA	1/16W
R3114	301 224 9316	MT-GLAZE	1K JA	1/16W
R3115	301 224 9316	MT-GLAZE	1K JA	1/16W
R3116	301 301 3817	MT-GLAZE	820 FA	1/16W
R3117	301 301 3817	MT-GLAZE	820 FA	1/16W
R3118	301 301 3817	MT-GLAZE	820 FA	1/16W
R3119	301 225 0213	MT-GLAZE	3.3K JA	1/16W
R3121	301 225 0213	MT-GLAZE	3.3K JA	1/16W
R3122	301 225 0213	MT-GLAZE	3.3K JA	1/16W
R3123	301 226 2414	MT-GLAZE	560 JA	1/16W
R3124	301 226 2414	MT-GLAZE	560 JA	1/16W
R3125	301 226 2414	MT-GLAZE	560 JA	1/16W
R3126	301 224 8913	MT-GLAZE	100K JA	1/16W
R3127	301 224 8913	MT-GLAZE	100K JA	1/16W
R3138	301 224 9613	MT-GLAZE	2.7K JA	1/16W
R3151	301 224 9712	MT-GLAZE	22 JA	1/16W
R3152	301 225 0213	MT-GLAZE	3.3K JA	1/16W
R3153	301 224 9712	MT-GLAZE	22 JA	1/16W
R3154	301 224 9712	MT-GLAZE	22 JA	1/16W
R3155	301 224 9712	MT-GLAZE	22 JA	1/16W
R3156	301 224 9712	MT-GLAZE	22 JA	1/16W
R3157	301 224 9712	MT-GLAZE	22 JA	1/16W
R3158	301 224 9712	MT-GLAZE	22 JA	1/16W
R3159	301 224 9019	MT-GLAZE	10K JA	1/16W
R3163	301 224 9019	MT-GLAZE	10K JA	1/16W
R3164	301 224 9019	MT-GLAZE	10K JA	1/16W
R3165	301 224 9712	MT-GLAZE	22 JA	1/16W
R3166	301 224 9712	MT-GLAZE	22 JA	1/16W
R3167	301 224 9712	MT-GLAZE	22 JA	1/16W
R3168	301 224 9712	MT-GLAZE	22 JA	1/16W
R3169	301 224 9712	MT-GLAZE	22 JA	1/16W
R3171	301 225 0213	MT-GLAZE	3.3K JA	1/16W
R3172	301 225 0213	MT-GLAZE	3.3K JA	1/16W
R3173	301 224 9712	MT-GLAZE	22 JA	1/16W
R3174	301 224 9712	MT-GLAZE	22 JA	1/16W
R3175	301 224 9712	MT-GLAZE	22 JA	1/16W
R3176	301 224 9712	MT-GLAZE	22 JA	1/16W
R3177	301 224 9316	MT-GLAZE	1K JA	1/16W
R3178	301 224 9316	MT-GLAZE	1K JA	1/16W
R3179	301 224 9316	MT-GLAZE	1K JA	1/16W
R3181	301 224 9316	MT-GLAZE	1K JA	1/16W
R3184	301 224 9019	MT-GLAZE	10K JA	1/16W
R3185	301 294 3016	MT-GLAZE	10K FA	1/16W
R3186	301 294 3016	MT-GLAZE	10K FA	1/16W
R3187	301 336 8818	MT-GLAZE	6.8K FA	1/16W
R4132	301 294 3115	MT-GLAZE	1K FA	1/16W
R4133	301 294 4419	MT-GLAZE	1.8K FA	1/16W
R4134	301 302 5414	MT-GLAZE	220 FA	1/16W
R4142	301 224 9019	MT-GLAZE	10K JA	1/16W
R4143	301 294 3115	MT-GLAZE	1K FA	1/16W
R4144	301 294 2910	MT-GLAZE	560 FA	1/16W
R4145	301 272 7814	MT-GLAZE	100 FA	1/16W
R4151	301 294 3016	MT-GLAZE	10K FA	1/16W
R4152	301 294 3016	MT-GLAZE	10K FA	1/16W
R4153	301 336 8818	MT-GLAZE	6.8K FA	1/16W
R4161	301 294 3016	MT-GLAZE	10K FA	1/16W
R4162	301 294 3016	MT-GLAZE	10K FA	1/16W
R4163	301 294 2613	MT-GLAZE	4.7K FA	1/16W
R4164	301 226 1516	MT-GLAZE	0.000 ZA	1/16W
R8001	301 226 1516	MT-GLAZE	0.000 ZA	1/16W
R8002	301 224 9514	MT-GLAZE	2.2K JA	1/16W
R8004	301 224 9019	MT-GLAZE	10K JA	1/16W
R8005	301 226 1516	MT-GLAZE	0.000 ZA	1/16W
R8006	301 224 9316	MT-GLAZE	1K JA	1/16W
R8007	301 224 9316	MT-GLAZE	1K JA	1/16W
R8008	301 224 9316	MT-GLAZE	1K JA	1/16W
R8010	301 225 1111	MT-GLAZE	27 JA	1/16W
R8011	301 226 1516	MT-GLAZE	0.000 ZA	1/16W
R8013	301 224 9514	MT-GLAZE	2.2K JA	1/16W
R8015	301 225 1814	MT-GLAZE	47 JA	1/16W
R8016	301 225 1814	MT-GLAZE	47 JA	1/16W
R8017	301 225 1814	MT-GLAZE	47 JA	1/16W
R8018	301 225 1814	MT-GLAZE	47 JA	1/16W
R8021	301 226 1516	MT-GLAZE	0.000 ZA	1/16W
R8023	301 226 1516	MT-GLAZE	0.000 ZA	1/16W
R8024	301 226 1516	MT-GLAZE	0.000 ZA	1/16W
R8026	301 224 9019	MT-GLAZE	10K JA	1/16W
R8028	301 224 8814	MT-GLAZE	100 JA	1/16W
R8029	301 224 9415	MT-GLAZE	1M JA	1/16W
R8030	301 225 1814	MT-GLAZE	47 JA	1/16W
R8031	301 225 1517	MT-GLAZE	3.9K JA	1/16W

Electrical Parts List

Key No.	Part No.	Description		
R8032	301 224 8814	MT-GLAZE	100 JA	1/16W
R8033	301 224 8814	MT-GLAZE	100 JA	1/16W
R8034	301 224 8814	MT-GLAZE	100 JA	1/16W
R8035	301 224 8814	MT-GLAZE	100 JA	1/16W
R8036	301 224 8814	MT-GLAZE	100 JA	1/16W
R8037	301 224 8814	MT-GLAZE	100 JA	1/16W
R8038	301 224 9019	MT-GLAZE	10K JA	1/16W
R8039	301 224 9415	MT-GLAZE	1M JA	1/16W
R8041	301 259 7823	MT-GLAZE	20K JA	1/16W
R8042	301 226 1516	MT-GLAZE	0.000 ZA	1/16W
R8043	301 225 0916	MT-GLAZE	82K JA	1/16W
R8044	301 224 9316	MT-GLAZE	1K JA	1/16W
R8045	301 234 4912	MT-GLAZE	150K JA	1/16W
R8046	301 224 8814	MT-GLAZE	100 JA	1/16W
R8048	301 226 1516	MT-GLAZE	0.000 ZA	1/16W
R8049	301 301 3817	MT-GLAZE	820 FA	1/16W
R8050	301 225 1517	MT-GLAZE	3.9K JA	1/16W
R8051	301 226 1516	MT-GLAZE	0.000 ZA	1/16W
R8053	301 226 1516	MT-GLAZE	0.000 ZA	1/16W
R8054	301 226 1516	MT-GLAZE	0.000 ZA	1/16W
R8056	301 226 1516	MT-GLAZE	0.000 ZA	1/16W
R8057	301 224 9019	MT-GLAZE	10K JA	1/16W
R8058	301 225 0510	MT-GLAZE	33K JA	1/16W
R8059	301 224 9019	MT-GLAZE	10K JA	1/16W
R8060	301 224 9019	MT-GLAZE	10K JA	1/16W
R8061	301 294 2712	MT-GLAZE	150 FA	1/16W
R8063	301 225 1616	MT-GLAZE	390 JA	1/16W
R8064	301 224 9316	MT-GLAZE	1K JA	1/16W
R8066	301 226 1516	MT-GLAZE	0.000 ZA	1/16W
R8067	301 224 9019	MT-GLAZE	10K JA	1/16W
R8070	301 225 1616	MT-GLAZE	390 JA	1/16W
R8071	301 294 2712	MT-GLAZE	150 FA	1/16W
R8073	301 225 1616	MT-GLAZE	390 JA	1/16W
R8075	301 224 9316	MT-GLAZE	1K JA	1/16W
R8076	301 226 1516	MT-GLAZE	0.000 ZA	1/16W
R8077	301 224 9019	MT-GLAZE	10K JA	1/16W
R8078	301 224 8913	MT-GLAZE	100K JA	1/16W
R8079	301 224 8913	MT-GLAZE	100K JA	1/16W
R8080	301 294 2712	MT-GLAZE	150 FA	1/16W
R8081	301 294 2712	MT-GLAZE	150 FA	1/16W
R8083	301 225 1616	MT-GLAZE	390 JA	1/16W
R8085	301 224 9316	MT-GLAZE	1K JA	1/16W
R8086	301 226 1516	MT-GLAZE	0.000 ZA	1/16W
R8087	301 224 9019	MT-GLAZE	10K JA	1/16W
R8088	301 294 2712	MT-GLAZE	150 FA	1/16W
R8089	301 294 2712	MT-GLAZE	150 FA	1/16W
R8090	301 226 1516	MT-GLAZE	0.000 ZA	1/16W
R8091	301 226 1516	MT-GLAZE	0.000 ZA	1/16W
R8092	301 226 1516	MT-GLAZE	0.000 ZA	1/16W
R8093	301 224 9316	MT-GLAZE	1K JA	1/16W
R8094	301 224 9019	MT-GLAZE	10K JA	1/16W
R8095	301 225 1814	MT-GLAZE	47 JA	1/16W
R8096	301 225 1814	MT-GLAZE	47 JA	1/16W
R8097	301 225 1814	MT-GLAZE	47 JA	1/16W
R8098	301 226 1516	MT-GLAZE	0.000 ZA	1/16W
R8101	301 225 1616	MT-GLAZE	390 JA	1/16W
R8102	301 224 9316	MT-GLAZE	1K JA	1/16W
R8103	301 224 9316	MT-GLAZE	1K JA	1/16W
R8104	301 226 1516	MT-GLAZE	0.000 ZA	1/16W
R8105	301 226 1516	MT-GLAZE	0.000 ZA	1/16W
R8111	301 224 8913	MT-GLAZE	100K JA	1/16W
R8114	301 224 9514	MT-GLAZE	2.2K JA	1/16W
R8115	301 224 9514	MT-GLAZE	2.2K JA	1/16W
R8122	301 225 1210	MT-GLAZE	4.7K JA	1/16W
R8126	301 224 9019	MT-GLAZE	10K JA	1/16W
R8127	301 224 9019	MT-GLAZE	10K JA	1/16W
R8130	301 035 4111	MT-GLAZE	0.000 ZA	1/8W
R8131	301 224 9019	MT-GLAZE	10K JA	1/16W
R8132	301 294 3115	MT-GLAZE	1K FA	1/16W
R8133	301 338 8113	MT-GLAZE	1.2K FA	1/16W
R8134	301 226 1516	MT-GLAZE	0.000 ZA	1/16W
R8135	301 224 9019	MT-GLAZE	10K JA	1/16W
R8136	301 224 9019	MT-GLAZE	10K JA	1/16W
R8137	301 272 7814	MT-GLAZE	100 FA	1/16W
R8138	301 224 9019	MT-GLAZE	10K JA	1/16W
R8139	301 224 9019	MT-GLAZE	10K JA	1/16W
R8140	301 224 9019	MT-GLAZE	10K JA	1/16W
R8141	301 224 9019	MT-GLAZE	10K JA	1/16W
R8142	301 226 1516	MT-GLAZE	0.000 ZA	1/16W
R8143	301 226 1516	MT-GLAZE	0.000 ZA	1/16W
R8144	301 226 1516	MT-GLAZE	0.000 ZA	1/16W
R8145	301 224 9019	MT-GLAZE	10K JA	1/16W
R8146	301 224 9019	MT-GLAZE	10K JA	1/16W
R8148	301 224 9019	MT-GLAZE	10K JA	1/16W
R8149	301 224 9019	MT-GLAZE	10K JA	1/16W
R8151	301 224 9019	MT-GLAZE	10K JA	1/16W
R8152	301 224 9019	MT-GLAZE	10K JA	1/16W
R8155	301 224 9316	MT-GLAZE	1K JA	1/16W
R8156	301 224 9514	MT-GLAZE	2.2K JA	1/16W
R8162	301 035 4111	MT-GLAZE	0.000 ZA	1/8W
R8164	301 224 9019	MT-GLAZE	10K JA	1/16W
R8165	301 224 9019	MT-GLAZE	10K JA	1/16W
R8166	301 226 1516	MT-GLAZE	0.000 ZA	1/16W
R8167	301 226 1516	MT-GLAZE	0.000 ZA	1/16W
R8168	301 226 1516	MT-GLAZE	0.000 ZA	1/16W
R8169	301 224 9019	MT-GLAZE	10K JA	1/16W
R8171	301 224 9019	MT-GLAZE	10K JA	1/16W
R8172	301 224 9019	MT-GLAZE	10K JA	1/16W
R8173	301 224 8814	MT-GLAZE	100 JA	1/16W
R8177	301 226 1516	MT-GLAZE	0.000 ZA	1/16W
R8179	301 224 9019	MT-GLAZE	10K JA	1/16W
R8180	301 224 9316	MT-GLAZE	1K JA	1/16W
R8183	301 224 9019	MT-GLAZE	10K JA	1/16W
R8184	301 224 9019	MT-GLAZE	10K JA	1/16W
R8185	301 226 1516	MT-GLAZE	0.000 ZA	1/16W
R8189	301 224 9019	MT-GLAZE	10K JA	1/16W
R8190	301 224 8814	MT-GLAZE	100 JA	1/16W
R8191	301 224 8814	MT-GLAZE	100 JA	1/16W
R8192	301 224 9019	MT-GLAZE	10K JA	1/16W
R8193	301 224 9019	MT-GLAZE	10K JA	1/16W
R8195	301 226 1516	MT-GLAZE	0.000 ZA	1/16W
R8196	301 226 1516	MT-GLAZE	0.000 ZA	1/16W
R8201	301 224 9712	MT-GLAZE	22 JA	1/16W
R8203	301 224 9712	MT-GLAZE	22 JA	1/16W
R8204	301 225 1210	MT-GLAZE	4.7K JA	1/16W
R8301	301 224 9514	MT-GLAZE	2.2K JA	1/16W
R8302	301 224 9019	MT-GLAZE	10K JA	1/16W
R8304	301 225 8011	MT-GLAZE	330 JA	1/16W
R8306	301 226 1516	MT-GLAZE	0.000 ZA	1/16W
R8307	301 226 1516	MT-GLAZE	0.000 ZA	1/16W
R8308	301 226 1516	MT-GLAZE	0.000 ZA	1/16W
R8309	301 226 1516	MT-GLAZE	0.000 ZA	1/16W
R8310	301 226 1516	MT-GLAZE	0.000 ZA	1/16W
R8311	301 226 1516	MT-GLAZE	0.000 ZA	1/16W
R8312	301 226 1516	MT-GLAZE	0.000 ZA	1/16W
R8313	301 226 1516	MT-GLAZE	0.000 ZA	1/16W
R8314	301 226 1516	MT-GLAZE	0.000 ZA	1/16W
R8316	301 226 1516	MT-GLAZE	0.000 ZA	1/16W
R8318	301 225 0213	MT-GLAZE	3.3K JA	1/16W
R8319	301 226 1516	MT-GLAZE	0.000 ZA	1/16W
R8321	301 225 8110	MT-GLAZE	10 JA	1/16W
R8322	301 225 8110	MT-GLAZE	10 JA	1/16W
R8323	301 224 8814	MT-GLAZE	100 JA	1/16W
R8324	301 224 9514	MT-GLAZE	2.2K JA	1/16W

Electrical Parts List

Key No.	Part No.	Description
R8325	301 224 9316	MT-GLAZE 1K JA 1/16W
R8326	301 225 1210	MT-GLAZE 4.7K JA 1/16W
R8327	301 225 1210	MT-GLAZE 4.7K JA 1/16W
R8328	301 225 1210	MT-GLAZE 4.7K JA 1/16W
R8329	301 225 1210	MT-GLAZE 4.7K JA 1/16W
R8330	301 225 8110	MT-GLAZE 10 JA 1/16W
R8331	301 225 8110	MT-GLAZE 10 JA 1/16W
R8332	301 037 5017	MT-GLAZE 0.000 ZA 1/10W
R8333	301 037 5017	MT-GLAZE 0.000 ZA 1/10W
R8402	301 336 8818	MT-GLAZE 6.8K FA 1/16W
R8403	301 294 3016	MT-GLAZE 10K FA 1/16W
R8404	301 294 3016	MT-GLAZE 10K FA 1/16W
R8405	301 226 1516	MT-GLAZE 0.000 ZA 1/16W
R9911	301 224 8814	MT-GLAZE 100 JA 1/16W
R9912	301 224 8814	MT-GLAZE 100 JA 1/16W
R9913	301 226 1516	MT-GLAZE 0.000 ZA 1/16W
R9916	301 224 8814	MT-GLAZE 100 JA 1/16W
R9917	301 226 1516	MT-GLAZE 0.000 ZA 1/16W
R9918	301 224 8814	MT-GLAZE 100 JA 1/16W
R9936	301 294 3016	MT-GLAZE 10K FA 1/16W
R9937	301 294 3016	MT-GLAZE 10K FA 1/16W
R9938	301 301 8119	MT-GLAZE 3.9K FA 1/16W
R9939	301 294 3511	MT-GLAZE 27K FA 1/16W
R9967	301 226 1516	MT-GLAZE 0.000 ZA 1/16W
R9968	301 225 2118	MT-GLAZE 12K JA 1/16W
R9969	301 224 8913	MT-GLAZE 100K JA 1/16W
R9971	301 294 4518	MT-GLAZE 18K FA 1/16W
R9972	301 294 3511	MT-GLAZE 27K FA 1/16W
R9973	301 294 3016	MT-GLAZE 10K FA 1/16W
R9974	301 037 5017	MT-GLAZE 0.000 ZA 1/10W
R9975	301 037 5017	MT-GLAZE 0.000 ZA 1/10W
R9976	301 037 5017	MT-GLAZE 0.000 ZA 1/10W
R9977	301 037 5017	MT-GLAZE 0.000 ZA 1/10W
R9978	301 224 9019	MT-GLAZE 10K JA 1/16W
R9979	301 224 9019	MT-GLAZE 10K JA 1/16W
R9981	301 226 1516	MT-GLAZE 0.000 ZA 1/16W
R9982	301 226 1516	MT-GLAZE 0.000 ZA 1/16W
R9983	301 226 1516	MT-GLAZE 0.000 ZA 1/16W
R9984	301 226 1516	MT-GLAZE 0.000 ZA 1/16W
R9985	301 226 1516	MT-GLAZE 0.000 ZA 1/16W
R9986	301 226 1516	MT-GLAZE 0.000 ZA 1/16W
R9987	301 226 1516	MT-GLAZE 0.000 ZA 1/16W
R9988	301 224 9316	MT-GLAZE 1K JA 1/16W
R9989	301 224 9316	MT-GLAZE 1K JA 1/16W
RB1101	645 049 0675	R-NETWORK 33X4 1/32W
	945 049 0690	R-NETWORK 33X4 1/16W
RB1102	645 049 0675	R-NETWORK 33X4 1/32W
	945 049 0690	R-NETWORK 33X4 1/16W
RB1103	645 049 0675	R-NETWORK 33X4 1/32W
	945 049 0690	R-NETWORK 33X4 1/16W
RB1104	645 049 0675	R-NETWORK 33X4 1/32W
	945 049 0690	R-NETWORK 33X4 1/16W
RB1106	645 049 0675	R-NETWORK 33X4 1/32W
	945 049 0690	R-NETWORK 33X4 1/16W
RB1107	645 049 0675	R-NETWORK 33X4 1/32W
	945 049 0690	R-NETWORK 33X4 1/16W
RB1108	645 049 0675	R-NETWORK 33X4 1/32W
	945 049 0690	R-NETWORK 33X4 1/16W
RB1112	645 049 0675	R-NETWORK 33X4 1/32W
	945 049 0690	R-NETWORK 33X4 1/16W
RB1113	645 049 0675	R-NETWORK 33X4 1/32W
	945 049 0690	R-NETWORK 33X4 1/16W
RB1114	645 049 0675	R-NETWORK 33X4 1/32W
	945 049 0690	R-NETWORK 33X4 1/16W
RB1116	645 049 0675	R-NETWORK 33X4 1/32W
	945 049 0690	R-NETWORK 33X4 1/16W
RB3151	945 034 5051	R-NETWORK 22X4 1/32W
	945 037 0824	R-NETWORK 22X4 1/16W
RB3152	945 034 5051	R-NETWORK 22X4 1/32W
	945 037 0824	R-NETWORK 22X4 1/16W
RB3153	945 034 5051	R-NETWORK 22X4 1/32W
	945 037 0824	R-NETWORK 22X4 1/16W
RB3154	945 034 5051	R-NETWORK 22X4 1/32W
	945 037 0824	R-NETWORK 22X4 1/16W
RB3155	945 034 5051	R-NETWORK 22X4 1/32W
	945 037 0824	R-NETWORK 22X4 1/16W
RB3156	945 034 5051	R-NETWORK 22X4 1/32W
	945 037 0824	R-NETWORK 22X4 1/16W
RB8001	945 034 5051	R-NETWORK 22X4 1/32W
	945 037 0824	R-NETWORK 22X4 1/16W
RB8002	945 034 5051	R-NETWORK 22X4 1/32W
	945 037 0824	R-NETWORK 22X4 1/16W
RB8003	945 034 5051	R-NETWORK 22X4 1/32W
	945 037 0824	R-NETWORK 22X4 1/16W
RB8004	945 034 5051	R-NETWORK 22X4 1/32W
	945 037 0824	R-NETWORK 22X4 1/16W
RB8005	945 034 5051	R-NETWORK 22X4 1/32W
	945 037 0824	R-NETWORK 22X4 1/16W
RB8006	945 034 5051	R-NETWORK 22X4 1/32W
	945 037 0824	R-NETWORK 22X4 1/16W
RB8007	945 034 5051	R-NETWORK 22X4 1/32W
	945 037 0824	R-NETWORK 22X4 1/16W
RB8008	945 034 5051	R-NETWORK 22X4 1/32W
	945 037 0824	R-NETWORK 22X4 1/16W
RB8009	945 034 5051	R-NETWORK 22X4 1/32W
	945 037 0824	R-NETWORK 22X4 1/16W
RB8010	945 034 5051	R-NETWORK 22X4 1/32W
	945 037 0824	R-NETWORK 22X4 1/16W
RB8011	945 029 5783	R-NETWORK 100X4 1/32W
	945 028 0697	R-NETWORK 100X4 1/16W
RB8012	945 029 5783	R-NETWORK 100X4 1/32W
	945 028 0697	R-NETWORK 100X4 1/16W
RB8013	945 029 5783	R-NETWORK 100X4 1/32W
	945 028 0697	R-NETWORK 100X4 1/16W
RB8014	945 029 5783	R-NETWORK 100X4 1/32W
	945 028 0697	R-NETWORK 100X4 1/16W
RB8015	945 034 5051	R-NETWORK 22X4 1/32W
	945 037 0824	R-NETWORK 22X4 1/16W
RB8016	945 034 5051	R-NETWORK 22X4 1/32W
	945 037 0824	R-NETWORK 22X4 1/16W
RB8017	945 029 5790	R-NETWORK 1KX4 1/32W
	945 028 0703	R-NETWORK 1KX4 1/16W
RB8018	945 029 5790	R-NETWORK 1KX4 1/32W
	945 028 0703	R-NETWORK 1KX4 1/16W
RB8019	945 029 5790	R-NETWORK 1KX4 1/32W
	945 028 0703	R-NETWORK 1KX4 1/16W
RB8021	945 029 5783	R-NETWORK 100X4 1/32W
	945 028 0697	R-NETWORK 100X4 1/16W
RB8022	945 029 5783	R-NETWORK 100X4 1/32W
	945 028 0697	R-NETWORK 100X4 1/16W
RB8023	945 029 5783	R-NETWORK 100X4 1/32W
	945 028 0697	R-NETWORK 100X4 1/16W
RB8024	945 029 5783	R-NETWORK 100X4 1/32W
	945 028 0697	R-NETWORK 100X4 1/16W
RB8031	945 029 5783	R-NETWORK 100X4 1/32W
	945 028 0697	R-NETWORK 100X4 1/16W
RB8032	945 029 5783	R-NETWORK 100X4 1/32W
	945 028 0697	R-NETWORK 100X4 1/16W
RB8033	945 029 5783	R-NETWORK 100X4 1/32W
	945 028 0697	R-NETWORK 100X4 1/16W
RB8034	945 029 5783	R-NETWORK 100X4 1/32W
	945 028 0697	R-NETWORK 100X4 1/16W
RB9911	945 036 0979	R-NETWORK 10KX4 1/32W
	945 028 0710	R-NETWORK 10KX4 1/16W

Electrical Parts List

Key No.	Part No.	Description
RB9912	945 036 0979	R-NETWORK 10KX4 1/32W
	945 028 0710	R-NETWORK 10KX4 1/16W
TRANSFORMER		
T1181	945 076 5019	FILTER,LP 34MHZ
COIL		
L1011	645 089 3438	FILTER,EMI 20MHZ
L1012	645 089 3438	FILTER,EMI 20MHZ
L1031	645 078 7089	INDUCTOR,33U K
L1032	645 078 7089	INDUCTOR,33U K
L1041	645 078 7089	INDUCTOR,33U K
L1042	645 078 7089	INDUCTOR,33U K
L1061	945 036 3895	INDUCTOR,220 OHM
L1062	945 036 3895	INDUCTOR,220 OHM
L1101	945 059 2233	INDUCTOR,10U K
L1102	945 059 2226	INDUCTOR,1.0U M
L2031	945 059 2233	INDUCTOR,10U K
L2032	945 059 2233	INDUCTOR,10U K
L2071	945 040 7797	FILTER,LP 30MHZ
L2072	945 040 7797	FILTER,LP 30MHZ
L2073	945 040 7797	FILTER,LP 30MHZ
L3001	945 086 7461	FILTER,EMI 100MHZ
L3002	945 086 7461	FILTER,EMI 100MHZ
L3003	945 086 7461	FILTER,EMI 100MHZ
L3011	645 078 7089	INDUCTOR,33U K
L3012	645 078 7089	INDUCTOR,33U K
L3101	945 044 3627	FILTER,LP 7MHZ
L3102	945 044 3627	FILTER,LP 7MHZ
L3103	945 044 3627	FILTER,LP 7MHZ
L3104	945 059 2240	INDUCTOR,2.2U M
L3151	945 059 2240	INDUCTOR,2.2U M
L4101	945 059 2233	INDUCTOR,10U K
L4172	945 059 2240	INDUCTOR,2.2U M
L4173	945 059 2240	INDUCTOR,2.2U M
L4174	645 097 4434	INDUCTOR,2.2U M
L4176	945 059 2240	INDUCTOR,2.2U M
L4177	945 059 2240	INDUCTOR,2.2U M
L8001	645 092 3494	IMPEDANCE,90 OHM P
L8002	645 092 3494	IMPEDANCE,90 OHM P
L8003	645 092 3494	IMPEDANCE,90 OHM P
L8004	645 092 3494	IMPEDANCE,90 OHM P
L8005	945 041 1978	INDUCTOR,330 OHM
L8006	945 041 1978	INDUCTOR,330 OHM
L8007	945 041 1978	INDUCTOR,330 OHM
L8008	945 041 1978	INDUCTOR,330 OHM
L8009	945 041 1978	INDUCTOR,330 OHM
L8011	945 041 1978	INDUCTOR,330 OHM
L8132	945 059 2240	INDUCTOR,2.2U M
L8401	945 059 2240	INDUCTOR,2.2U M
L9981	945 036 3895	INDUCTOR,220 OHM
L9982	945 036 3895	INDUCTOR,220 OHM
L9983	945 075 1388	INDUCTOR,10U M
DIODE		
D1013	307 092 9529	DIODE SB07-03C-TB
D1018	307 092 9529	DIODE SB07-03C-TB
D3001	307 223 0514	ZENER DIODE 02DZ12Y(TPH3)
D8063	307 232 0611	ZENER DIODE UDZS3.3B-TE-1
D8095	307 163 0414	DIODE 1SS352-(TPH3)
D8096	307 163 0414	DIODE 1SS352-(TPH3)
D8121	307 210 5416	DIODE RB551V-30-TE-17
D8175	307 163 0414	DIODE 1SS352-(TPH3)
D8191	307 201 2724	DIODE RB051L-40-TE25
D8192	307 201 2724	DIODE RB051L-40-TE25
D8195	307 254 2914	ZENER DIODE 02DZ6.8Y(TPH3
D8196	307 223 1115	ZENER DIODE 02DZ6.2Y(TPH3
D8197	307 223 1115	ZENER DIODE 02DZ6.2Y(TPH3
D8198	307 223 1115	ZENER DIODE 02DZ6.2Y(TPH3
D8199	307 210 5416	DIODE RB551V-30-TE-17
D8203	307 223 1115	ZENER DIODE 02DZ6.2Y(TPH3
D8204	307 223 1115	ZENER DIODE 02DZ6.2Y(TPH3
D8301	307 228 1011	LED SML-310MT-M-T86
MISCELLANEOUS		
K1001	945 028 0413	SOCKET,BNC 5P
K3001	945 040 9968	SOCKET,DIN 4P
K80A	645 101 8632	SOCKET,DVI 24P
K80B	945 027 7093	SOCKET,D-SUB 15P
K80H	945 041 6072	SOCKET,I/O 176P
SC1001	945 076 3503	SURGE-ABSORBER
SC1002	945 076 3503	SURGE-ABSORBER
SC1003	945 076 3503	SURGE-ABSORBER
SC1011	945 076 3503	SURGE-ABSORBER
SC1012	945 076 3503	SURGE-ABSORBER
SC3001	945 076 3503	SURGE-ABSORBER
SC3002	945 076 3503	SURGE-ABSORBER
SC8001	945 076 3503	SURGE-ABSORBER
SC8002	945 076 3503	SURGE-ABSORBER
SC8003	945 076 3503	SURGE-ABSORBER
SC8004	945 076 3503	SURGE-ABSORBER
SC8005	945 076 3503	SURGE-ABSORBER
X2031	945 041 3842	OSC,CRYSTAL 4MHZ
X3101	945 076 5194	OSC,CRYSTAL 79.991883MHZ
X8041	945 035 8839	OSC,CERAMIC 500.0KHZ

EIKI

A-key to better communications

(KE8B) Dec. 2009 Japan

© 2009 Eiki Internatinal Inc,

Diagrams & Drawings

Schematic Diagrams
Printed Wiring Board Drawings

Model	Chassis No.
LC-X800	KE8-X80000

These schematic diagrams and printed wiring board drawings are part of the service manual original for chassis No. KE8-X80000 model LC-X800.
File with the service manual No. SM5111208-00

Note:
All the information of part numbers and values indicated on these diagrams are at the beginning of production. To improve the performance, there may be some differences to the actual set. When you order the service parts, use service parts code mentioned on the parts list in this service manual.

Parts description and reading in schematic diagram

1. The parts specification of resistors, capacitors and coils are expressed in designated code. Please check the parts description by the following code table.
2. Some of transistors and diodes are indicated in mark for the substitution of parts name. Please check the parts name by the following code table.
3. Voltages and waveforms were taken with a video color bar signal (1Vp-p at 75 ohms terminated) and controls to normal.
4. Voltages were taken with a high-impedance digital voltmeter.

Capacitor Reading

Example 2000 K K 1000 BG

Characteristic

Example 160 E M 10

Capacitance value
Excepting electric capacitors, all capacitance values of less than 1 are expressed in µF and more than 1 are in pF.

Tolerance

Type

Rated voltage

● Material table

Mark	Material
E	Electrolytic
P	Electrolytic (non-polarized)
C	Ceramic (temperature compensation)
K	Ceramic
F	Polyester
N	Polypropylene
M	Metalized polypropylene
H	Metalized polypromylar
B	Ceramic (semiconductor)
G	Metalized polyestel
Y	Composite film
S	Styrol
T	Tantalum oxide solid electrolytic
U	Organic semiconductive electrolyte
D	Electric double layer electrolytic

● Tolerance table

Mark	Tolerance	
A	not specified	
B	±0.1	
C	±0.25	
D	±0.5	
F	±1	
G	±2	
E	±2.5	
H	±3	
J	±5	
K	±10	
M	±20	
N	±30	
P	+100	-0
Q	+30	-10
T	+50	-10
U	+75	-10
V	+20	-10
W	+100	-10
X	+40	-20
Y	+150	-10
Z	+80	-20

Coil Reading

Example L2 C1 4R7 K N

Tolerance

Inductance value

Manufacture code

Unique code

Mark	Tolerance (nH)	Mark	Tolerance (%)
C	±0.25	G	±2
D	±0.5	J	±5
S	±0.3	K	±10
A	±0.2	L	±15
		M	±20

Resistor Reading

Example 1/2 D J 10K B

Characteristic

Example 6 W K 8.2

Z (Carbon fuse)

B (Non-burnable)

Example 1/2 C K 1M

K indicates in KΩ

M indicate in MΩ

Resistance value

Tolerance (see below table)

Material (see below table)

Rated wattage (W)

Note: Resistor which is indicated with resistance value only are 1/6W carbon resistor. Resistor which is indicated with material, tolerance and value are 1/4W rated wattage.

● Material table

Mark	Material
D	Carbon
N	Metal film
S	Oxide metal film
C	Solid
G	Metal glaze
W	Wire wounding or cement
H	Ceramic
F	Fusible

● Tolerance table

Mark	Tolerance
A	±0.05
B	±0.1
C	±0.25
D	±0.5
F	±1
G	±2
J	±5
K	±10
M	±20
P	+5 -15
Z	used in 0 ohm

Diode/Transistor Type Reading

● Diode

Mark	Type number
R	1S2076A,1S2473,1N4148
AA	1S2076A,1S2473,1SS133,1N4148

● Transistor

(1) NPN type

Mark	Type number				
--	2SC536	2SC945A	2SC1815	2SC1740S	
AD	NF, NG	PA, QA	Y, GR	Q, R, S	
AE	NF, NG	PA, QA, RA	O, Y, GR	Q, R, S	

(2) PNP type

Mark	Type number				
--	2SA608	2SA564A	2SA1015	2SA933S	
AB	NF	R	Y, GR	R	
AC	NF	Q, R	O, Y, GR	Q, R	

(3) Chip type

Mark	Type number				
--	2SA1179N	2SA1037K	2SA1037AK	2SC2812/N	2SC2412K
AJ	M6, M7	R, S	R, S		
AH				L6, L7	R, S

Pin description of diode, transistor and IC

● Diode

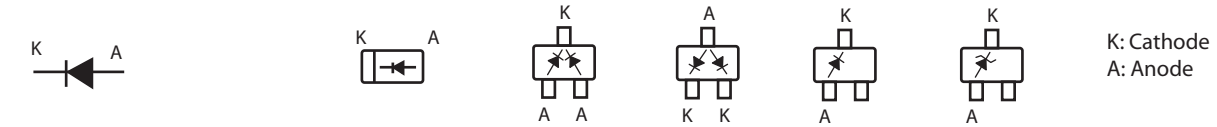

● Transistor/FET

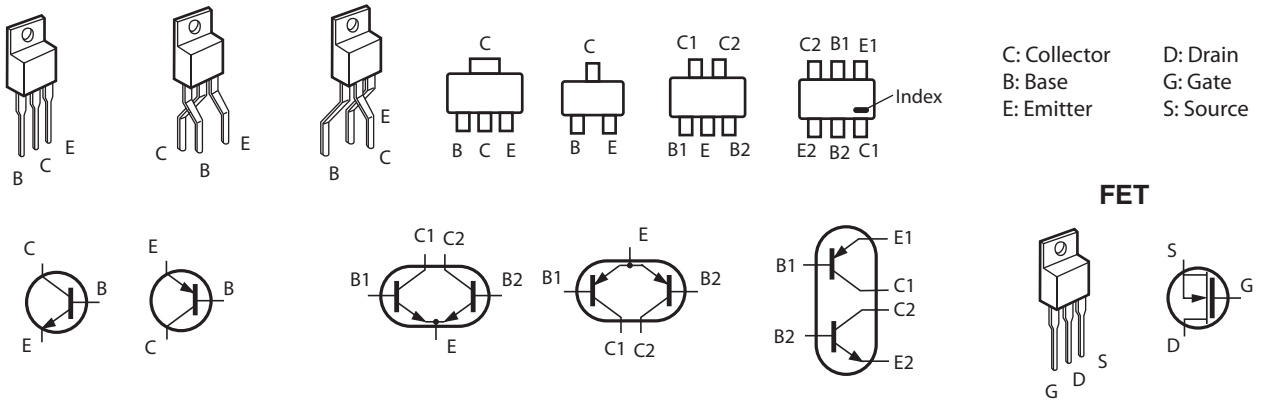

● IC

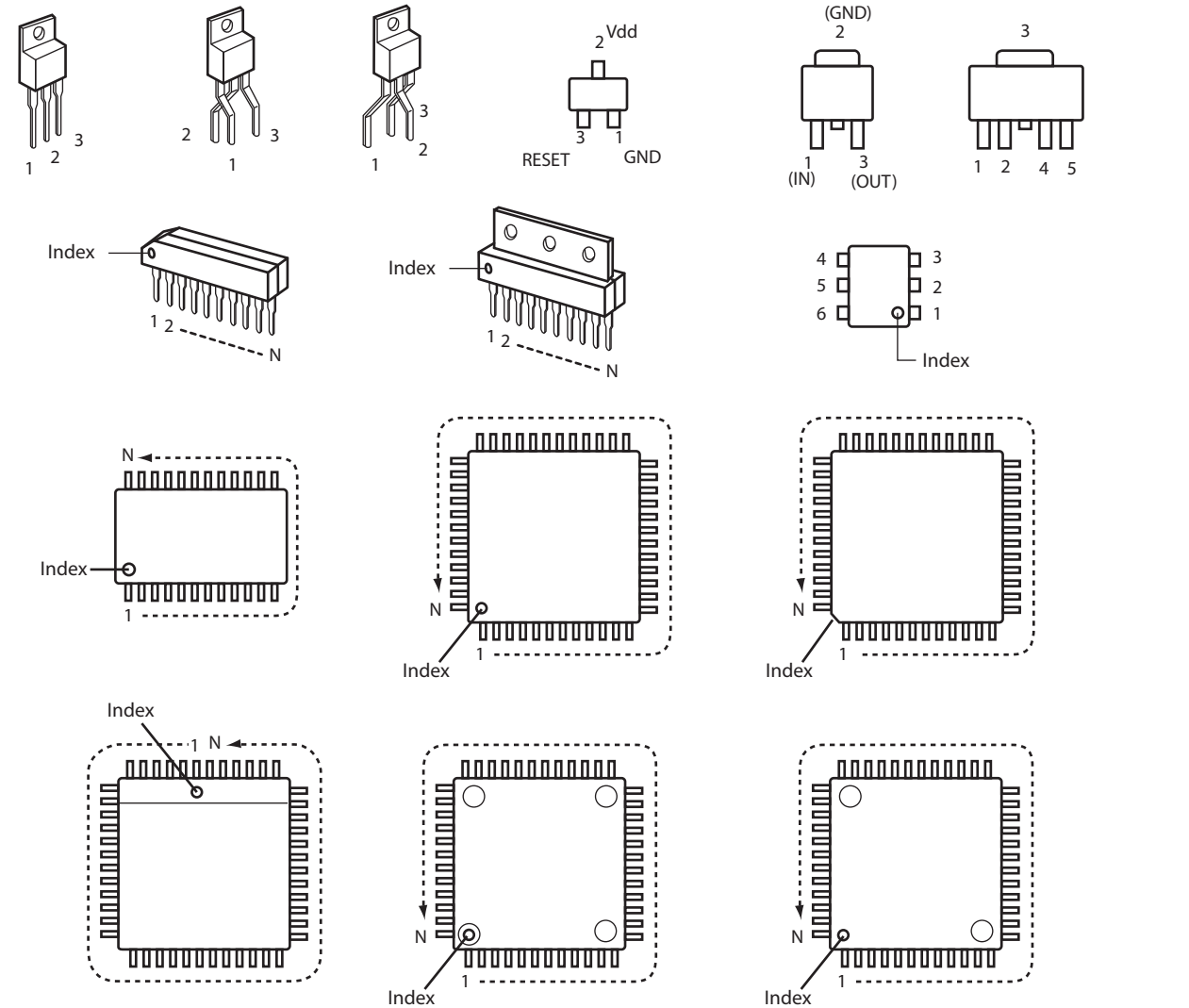

Note on Soldering

Do not use solder containing lead.

This product has been manufactured using lead-free solder in order to help preserve the environment.

Because of this, be sure to use lead-free solder when carrying out repair work, and never use solder containing lead.

Lead-free solder has a melting point that is 30–40 °C (86–104 °F) higher than solder containing lead, and moreover it does not contain lead which attaches easily to other metals. As a result, it does not melt as easily as solder containing lead, and soldering will be more difficult even if the temperature of the soldering iron is increased.

The extra difficulty in soldering means that soldering time will increase and damage to the components or the circuit board may easily occur.

Because of this, you should use a soldering iron and solder that satisfy the following conditions when carrying out repair work. Also, soldering work must be done in a short time.

Soldering iron

Use a soldering iron which is 70 W or equivalent, and which lets you adjust the tip temperature up to 450 °C (842 °F) It should also have as good temperature recovery characteristics as possible.

Solder

Use solder with the metal content and composition ratio by weight given in the table below. Do not use solders which do not meet these conditions.

Metal content	Tin (Sn)	Silver (Ag)	Copper (Cu)
Composition ratio by weight	96.5 %	3.0 %	0.5 %

Note:

If replacing existing solder containing lead with lead-free solder in the soldered parts of products that have been manufactured up until now, remove all of the existing solder at those parts before applying the lead-free solder.

Schematic Diagrams

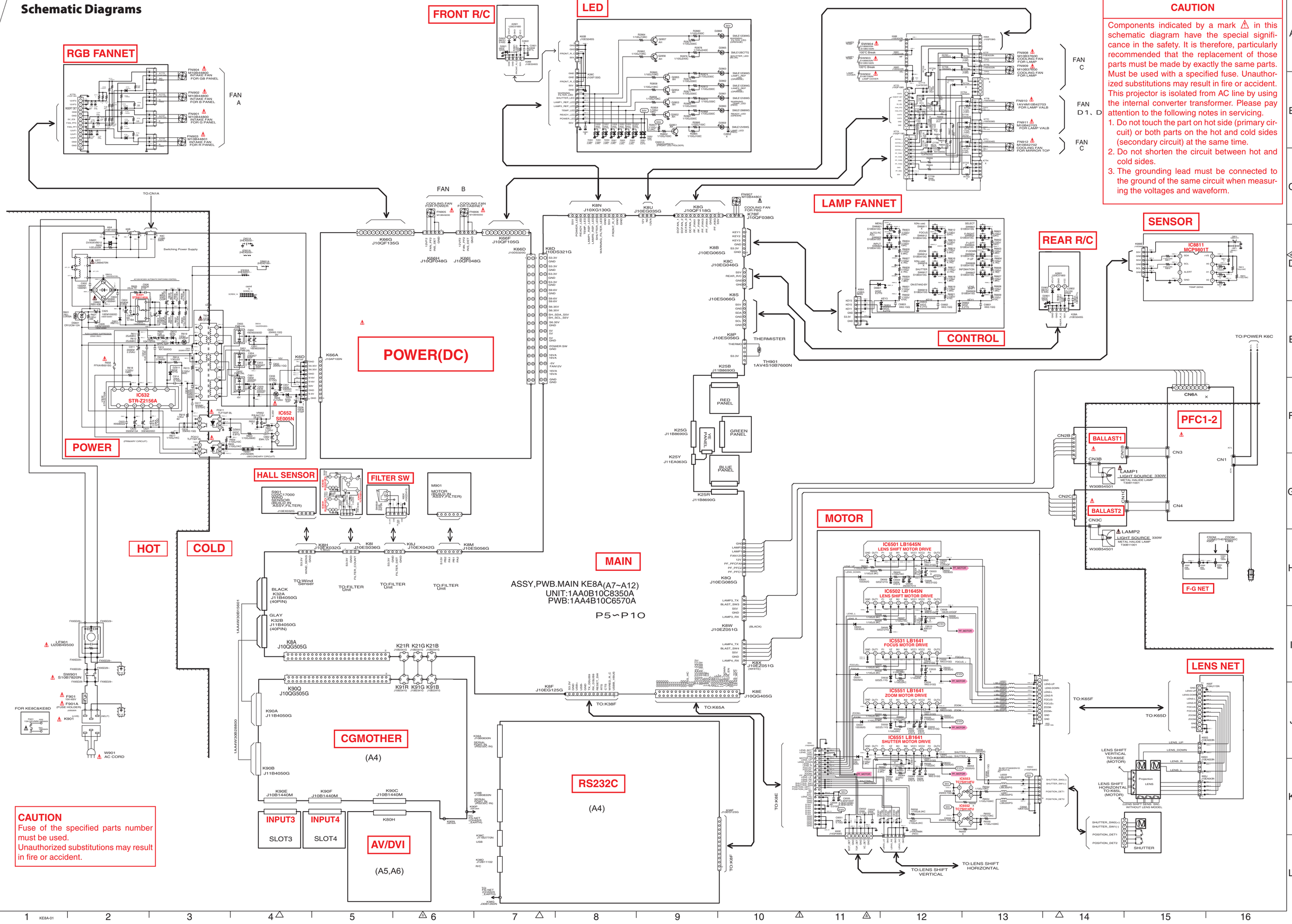

CAUTION

Components indicated by a mark ⚠ in this schematic diagram have the special significance in the safety. It is therefore, particularly recommended that the replacement of those parts must be made by exactly the same parts. Must be used with a specified fuse. Unauthorized substitutions may result in fire or accident. This projector is isolated from AC line by using the internal converter transformer. Please pay attention to the following notes in servicing.

1. Do not touch the part on hot side (primary circuit) or both parts on the hot and cold sides (secondary circuit) at the same time.
2. Do not shorten the circuit between hot and cold sides.
3. The grounding lead must be connected to the ground of the same circuit when measuring the voltages and waveform.

CAUTION

Fuse of the specified parts number must be used.
Unauthorized substitutions may result in fire or accident.

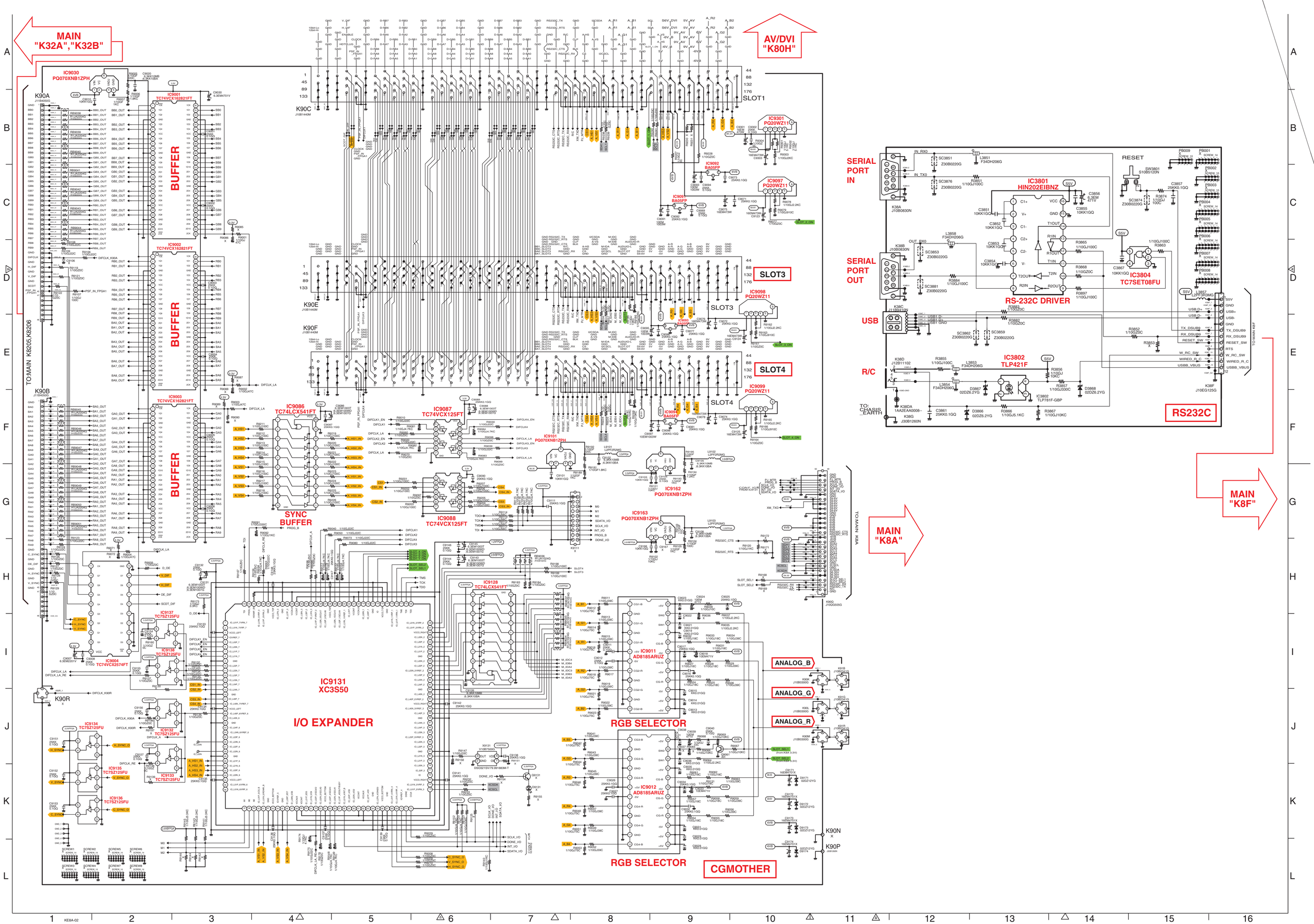
MAIN "K32A","K32B"
AV/DVI "K80H"
MAIN "K8F"
MAIN "K8A"
SERIAL PORT IN
SERIAL PORT OUT
USB
R/C
RS-232C DRIVER
IC3801 HIN202EIBNZ
IC3804 TC7SET08FU
IC3802 TLP421F
RS232C
SLOT1
SLOT3
SLOT4
IC9030 PQ070XNB1ZPH
IC9001 TC74VCX162821FT
IC9002 TC74VCX162821FT
IC9003 TC74VCX162821FT
BUFFER
IC9086 TC74LCX541FT
SYNC BUFFER
IC9087 TC74VCX125FT
IC9088 TC74VCX125FT
IC9101 PQ070XNB1ZPH
IC9162 PQ070XNB1ZPH
IC9163 PQ070XNB81ZPH
IC9301 PQ20WZ11
IC9097 PQ20WZ11
IC9098 PQ20WZ11
IC9099 PQ20WZ11
IC9092 BA05FP
IC9093 BA05FP
IC9094 BA05FP
IC9095 BA05FP
IC9128 TC74LCX541FT
IC9131 XC3S50
I/O EXPANDER
IC9137 TC7SZ125FU
IC9138 TC7SZ125FU
IC9004 TC74VCX2574FT
IC9134 TC7SZ125FU
IC9132 TC7SZ125FU
IC9133 TC7SZ125FU
IC9135 TC7SZ125FU
IC9136 TC7SZ125FU
IC9011 AD8185ARUZ
IC9012 AD8185ARUZ
RGB SELECTOR
ANALOG_B
ANALOG_G
ANALOG_R
CGMOTHER
TO MAIN K8A
TO MAIN K8F
TO MAIN K32A
TO MAIN K8205,K8206
TO CHASSIS_EARTH
K90A
K90B
K90C
K90E
K90F
K90R
K90N
K90P
KE8A-02
A4
SCH_KE8A

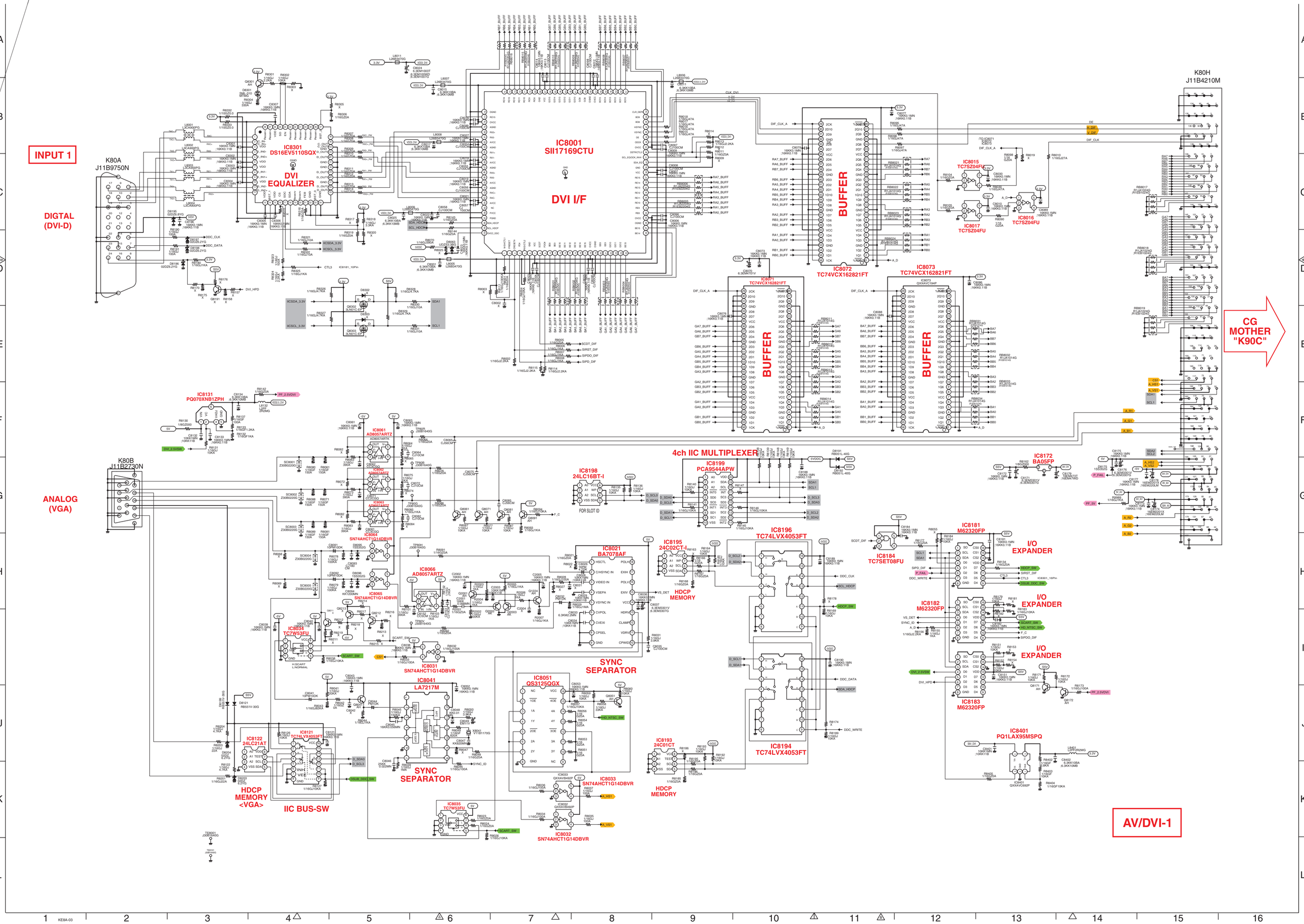
INPUT 1
K80A
J11B9750N
DIGTAL
(DVI-D)
IC8301
DS16EV5110SQX
DVI
EQUALIZER
IC8001
SII17169CTU
DVI I/F
BUFFER
IC8071
TC74VCX162821FT
IC8072
TC74VCX162821FT
IC8073
TC74VCX162821FT
IC8015
TC7SZ04FU
IC8017
TC7SZ04FU
IC8016
TC7SZ04FU
K80H
J11B4210M
CG
MOTHER
"K90C"
IC8131
PQ070XNB1ZPH
K80B
J11B2730N
ANALOG
(VGA)
IC8061
AD8057ARTZ
IC8062
AD8057ARTZ
IC8063
AD8057ARTZ
IC8064
SN74AHCT1G14DBVR
IC8065
SN74AHCT1G14DBVR
IC8034
TC7W53FU
IC8031
SN74AHCT1G14DBVR
IC8041
LA7217M
IC8122
24LC21AT
IC8121
TC74LVX4053FT
HDCP
MEMORY
<VGA>
IIC BUS-SW
SYNC
SEPARATOR
IC8051
QS3125QGX
IC8033
SN74AHCT1G14DBVR
IC8032
SN74AHCT1G14DBVR
IC8035
TC7W53FU
IC8066
AD8057ARTZ
IC8021
BA7078AF
SYNC
SEPARATOR
IC8198
24LC16BT-I
FOR SLOT ID
4ch IIC MULTIPLEXER
IC8199
PCA9544APW
IC8195
24C02CT-I
HDCP
MEMORY
IC8196
TC74LVX4053FT
IC8194
TC74LVX4053FT
IC8193
24C01CT
HDCP
MEMORY
IC8172
BA05FP
IC8184
TC7SET08FU
IC8181
M62320FP
I/O
EXPANDER
IC8182
M62320FP
I/O
EXPANDER
IC8183
M62320FP
I/O
EXPANDER
IC8401
PQ1LAX95MSPQ
AV/DVI-1

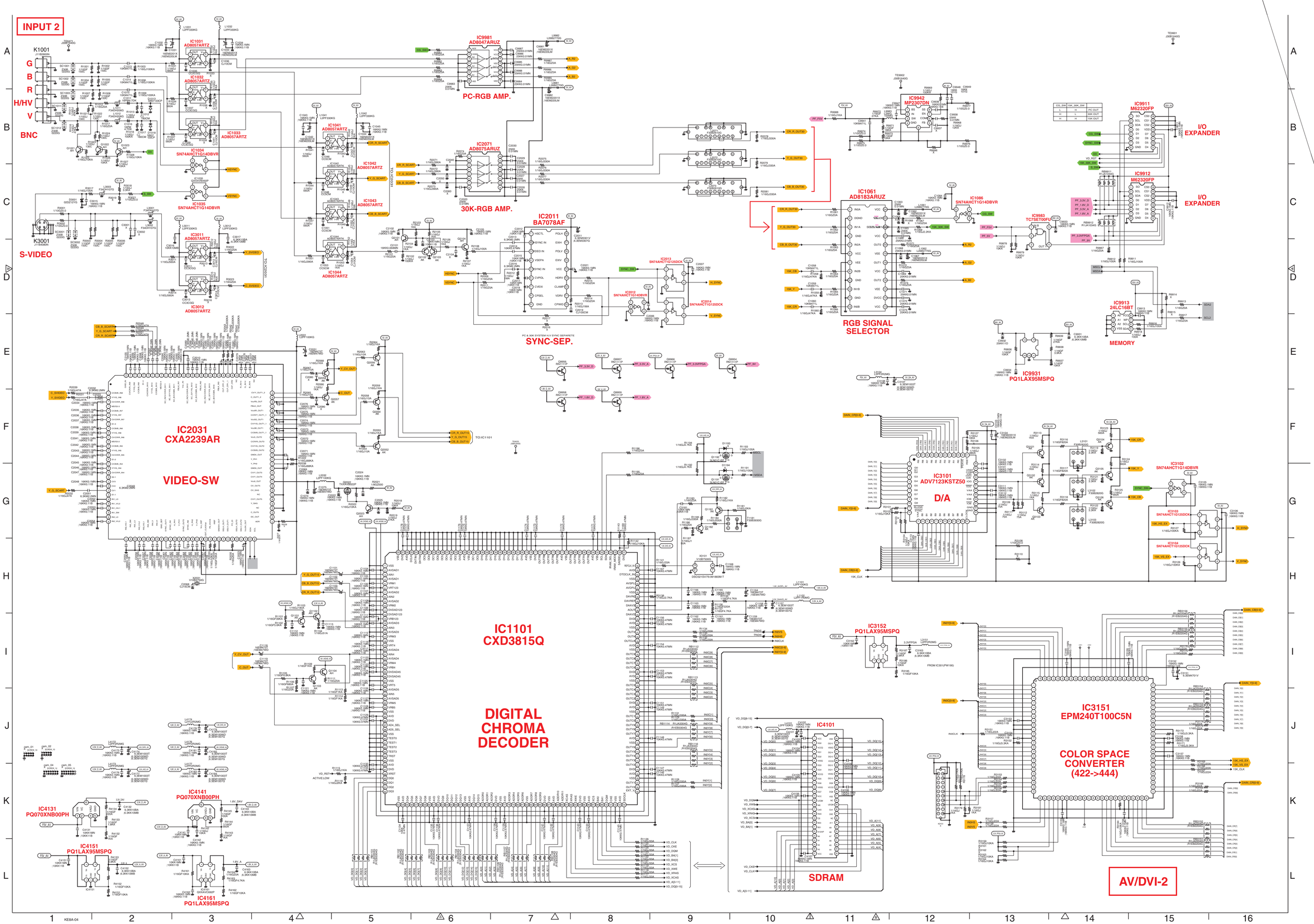
INPUT 2
K1001
G
B
R
H/HV
V
BNC
K3001
S-VIDEO
IC1031 AD8057ARTZ
IC1032 AD8057ARTZ
IC1033 AD8057ARTZ
IC1034 SN74AHCT1G14DBVR
IC1035 SN74AHCT1G14DBVR
IC1041 AD8057ARTZ
IC1042 AD8057ARTZ
IC1043 AD8057ARTZ
IC1044 AD8057ARTZ
IC3011 AD8057ARTZ
IC3012 AD8057ARTZ
IC9981 AD8047ARUZ
PC-RGB AMP.
IC2071 AD8075ARUZ
30K-RGB AMP.
IC2011 BA7078AF
IC2013 SN74AHCT1G125DCK
IC2012 SN74AHCT1G14DBVR
IC2014 SN74AHCT1G125DCK
SYNC-SEP.
IC9942 MP2307DN
IC1061 AD8183ARUZ
RGB SIGNAL SELECTOR
IC1086 SN74AHCT1G14DBVR
IC9983 TC7SET00FU
IC9911 M6320FP
IC9912 M6320FP
I/O EXPANDER
IC9913 24LC16BT
MEMORY
IC9931 PQ1LAX95MSPQ
IC2031 CXA2239AR
VIDEO-SW
IC1101 CXD3815Q
DIGITAL CHROMA DECODER
IC3101 ADV7123KSTZ50
D/A
IC3102 SN74AHCT1G14DBVR
IC3103 SN74AHCT1G125DCK
IC3104 SN74AHCT1G125DCK
IC3152 PQ1LAX95MSPQ
IC3151 EPM240T100C5N
COLOR SPACE CONVERTER (422->444)
AV/DVI-2
IC4101
SDRAM
IC4131 PQ070XNB00PH
IC4141 PQ070XNB00PH
IC4151 PQ1LAX95MSPQ
IC4161 PQ1LAX95MSPQ

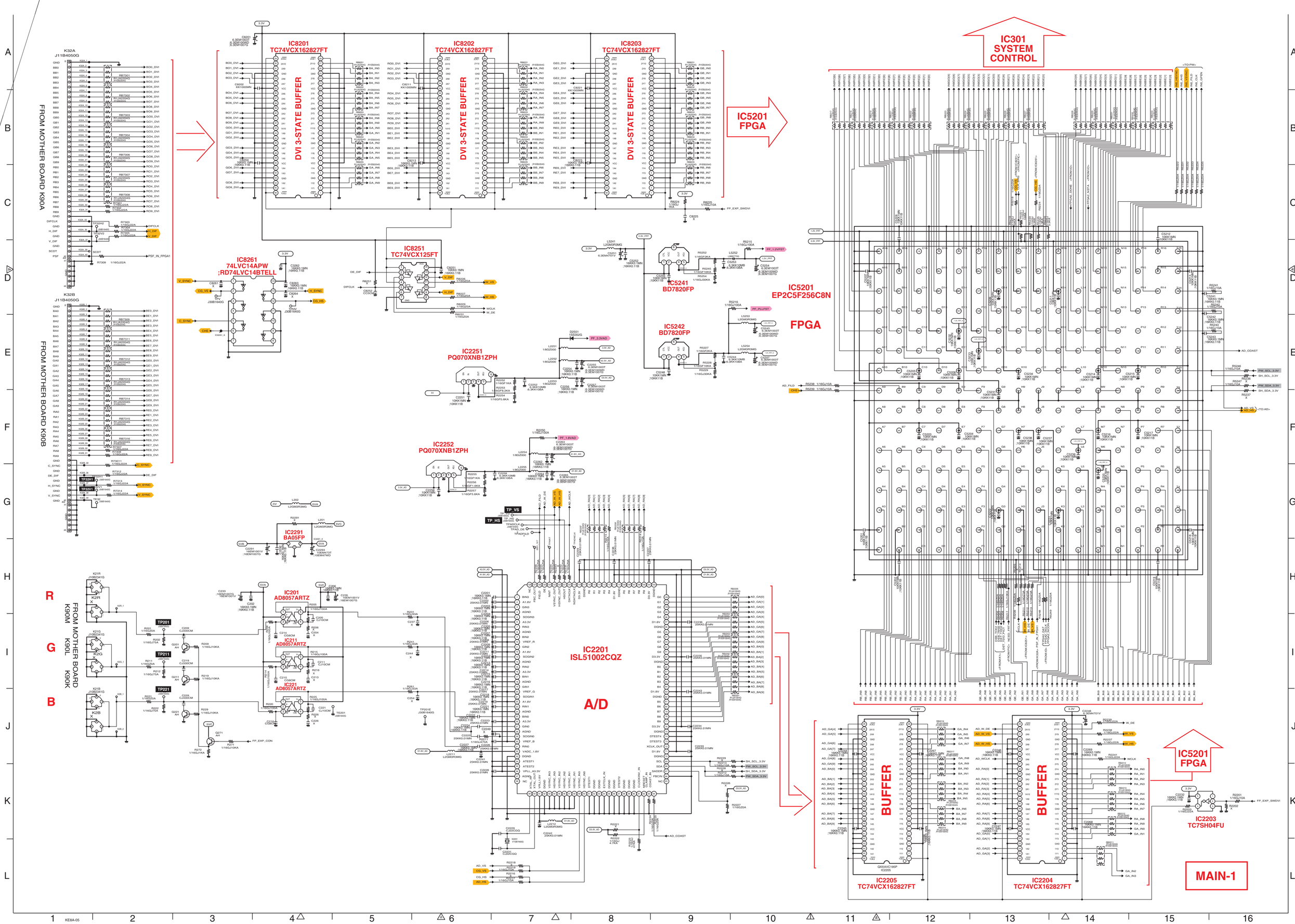
IC301
SYSTEM
CONTROL
IC8201
TC74VCX162827FT
IC8202
TC74VCX162827FT
IC8203
TC74VCX162827FT
DVI 3-STATE BUFFER
IC5201
FPGA
IC5201
EP2C5F256C8N
FPGA
IC8251
TC74VCX125FT
IC8261
74LVC14APW
;RD74LVC14BTELL
IC5241
BD7820FP
IC5242
BD7820FP
IC2251
PQ070XNB1ZPH
IC2252
PQ070XNB1ZPH
IC2291
BA05FP
IC201
AD8057ARTZ
IC211
AD8057ARTZ
IC221
AD8057ARTZ
IC2201
ISL51002CQZ
A/D
BUFFER
IC2205
TC74VCX162827FT
IC2204
TC74VCX162827FT
IC5201
FPGA
IC2203
TC7SH04FU
MAIN-1
FROM MOTHER BOARD K90A
FROM MOTHER BOARD K90B
FROM MOTHER BOARD K90M K90L K90K
R
G
B
K32A
J11B4050G
K32B
J11B4050G
TP201
TP211
TP221
TP_VS
TP_HS
TP32R1
TP32V1
TP32V2

SCH_KE8A

A7

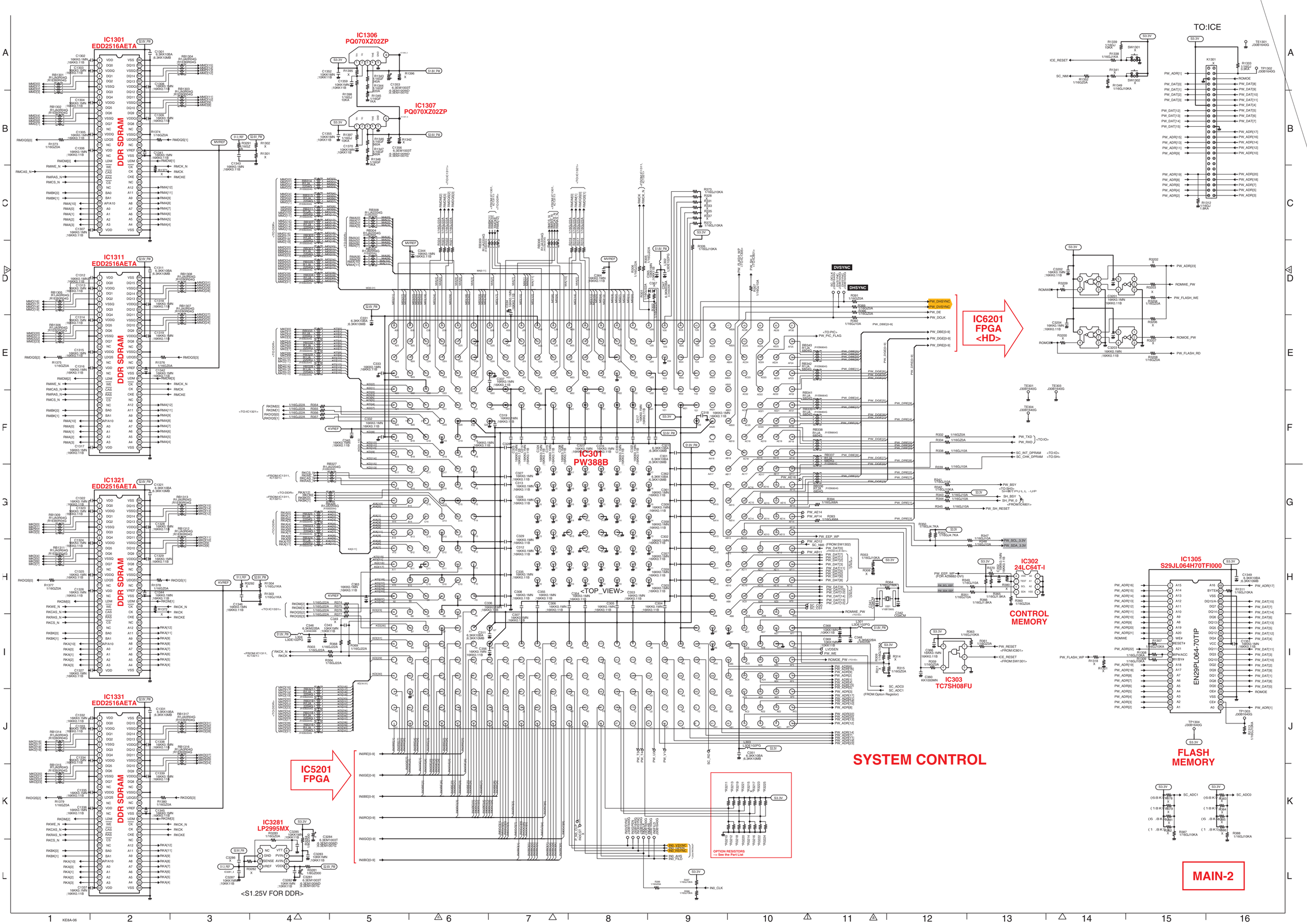
IC1301
EDD2516AETA
IC1306
PQ070XZ02ZP
IC1307
PQ070XZ02ZP
IC1311
EDD2516AETA
IC1321
EDD2516AETA
IC1331
EDD2516AETA
DDR SDRAM
IC301
PW388B
<TOP_VIEW>
IC6201
FPGA
<HD>
IC5201
FPGA
SYSTEM CONTROL
TO:ICE
IC302
24LC64T-I
CONTROL
MEMORY
IC303
TC7SH08FU
IC1305
S29JL064H70TFI000
EN29PL064-70TIP
FLASH
MEMORY
IC3281
LP2995MX
<S1.25V FOR DDR>
OPTION RESISTORS
>> See the Part List
MAIN-2
DVSYNC
DHSYNC
KEBA-06
SCH_KE8A
A8

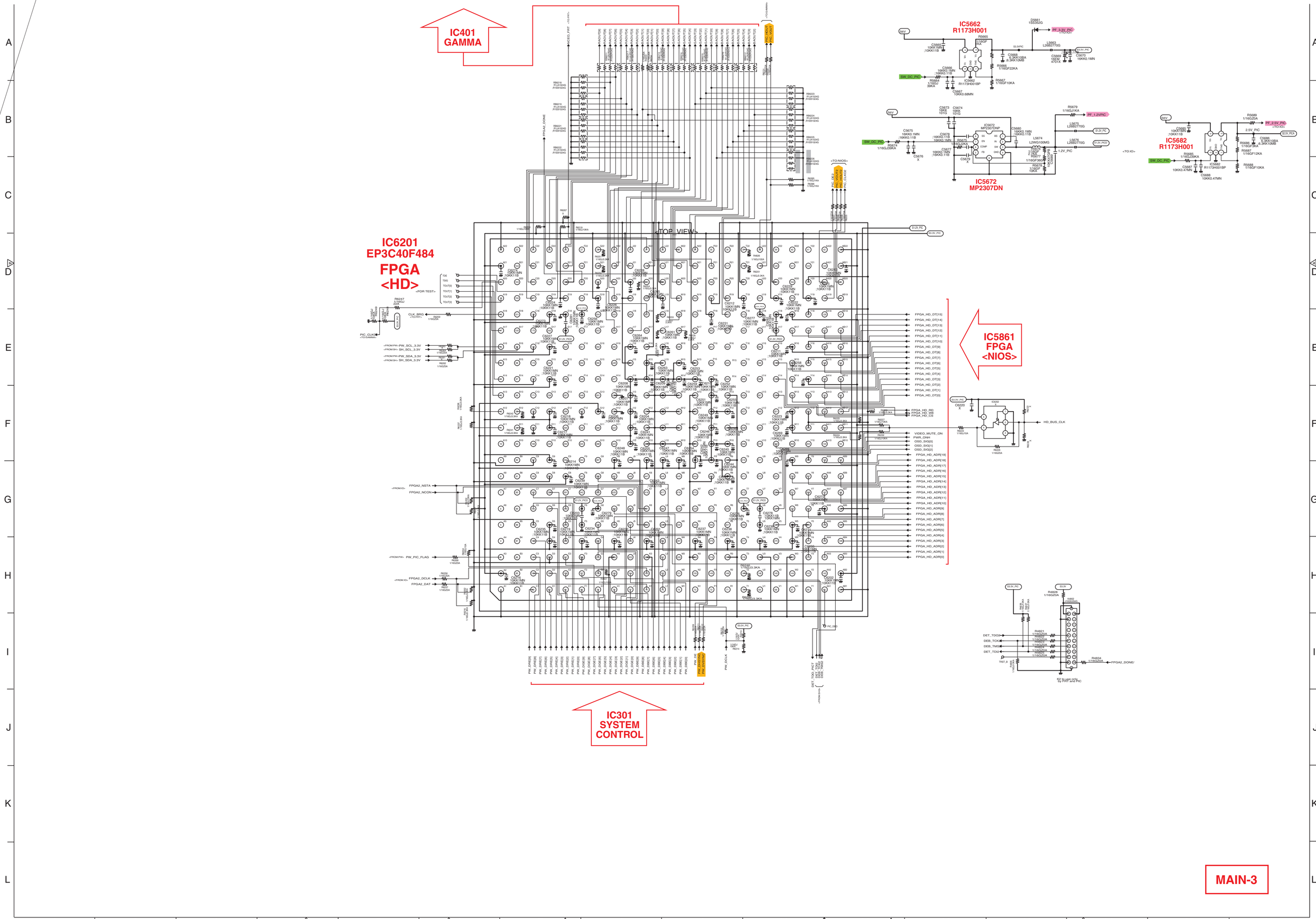
IC401
GAMMA
IC5662
R1173H001
IC5672
MP2307DN
IC5682
R1173H001
IC6201
EP3C40F484
FPGA
<HD>
<TOP VIEW>
IC5861
FPGA
<NIOS>
IC301
SYSTEM
CONTROL
MAIN-3

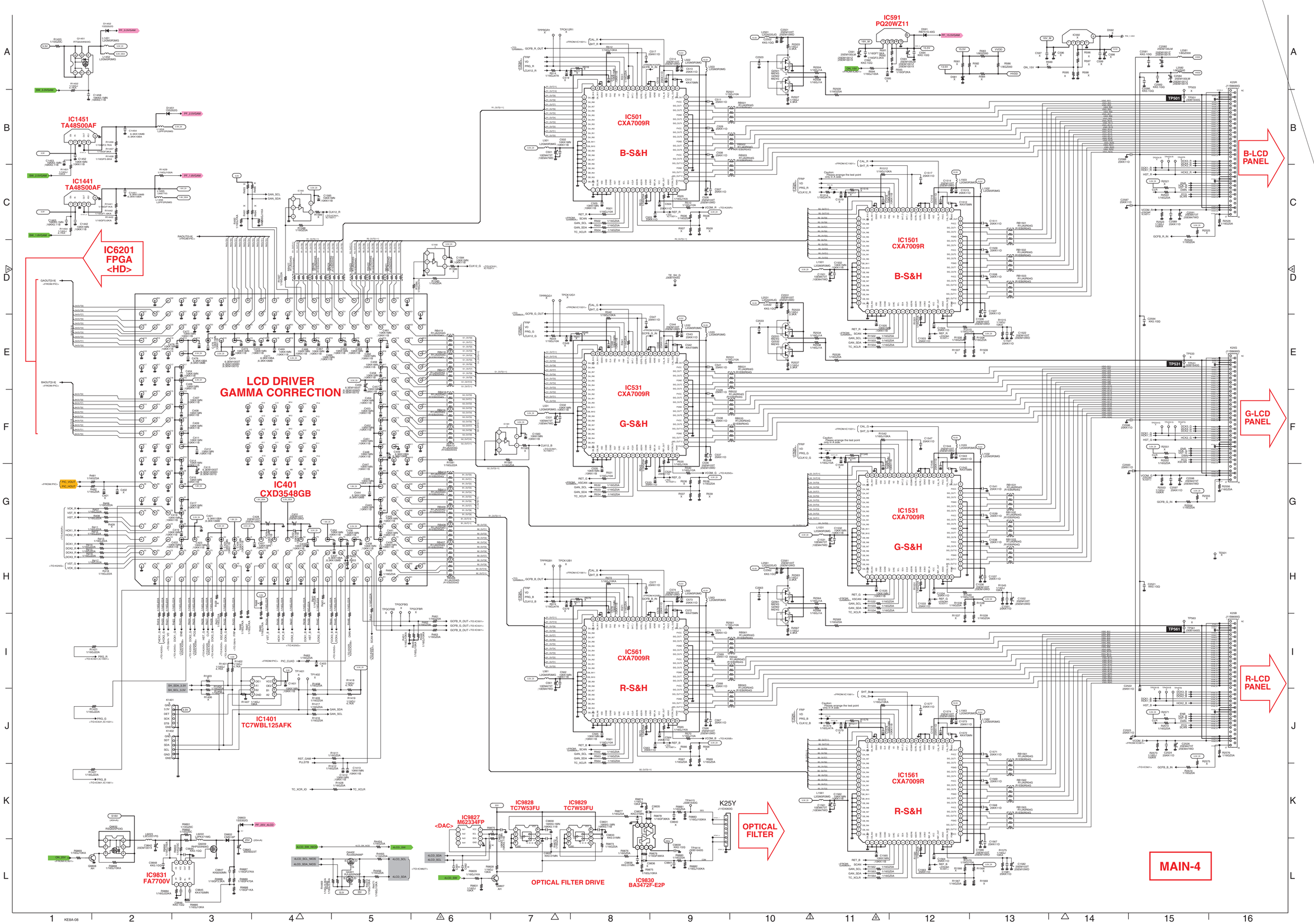
IC1451
TA48S00AF
IC1441
TA48S00AF
IC6201
FPGA
<HD>
IC591
PQ20WZ11
IC501
CXA7009R
B-S&H
IC1501
CXA7009R
B-S&H
B-LCD
PANEL
LCD DRIVER
GAMMA CORRECTION
IC401
CXD3548GB
IC531
CXA7009R
G-S&H
IC1531
CXA7009R
G-S&H
G-LCD
PANEL
IC561
CXA7009R
R-S&H
IC1561
CXA7009R
R-S&H
R-LCD
PANEL
IC1401
TC7WBL125AFK
IC9827
M62334FP
<DAC>
IC9828
TC7W53FU
IC9829
TC7W53FU
K25Y
OPTICAL
FILTER
OPTICAL FILTER DRIVE
IC9831
FA7700V
IC9830
BA3472F-E2P
MAIN-4

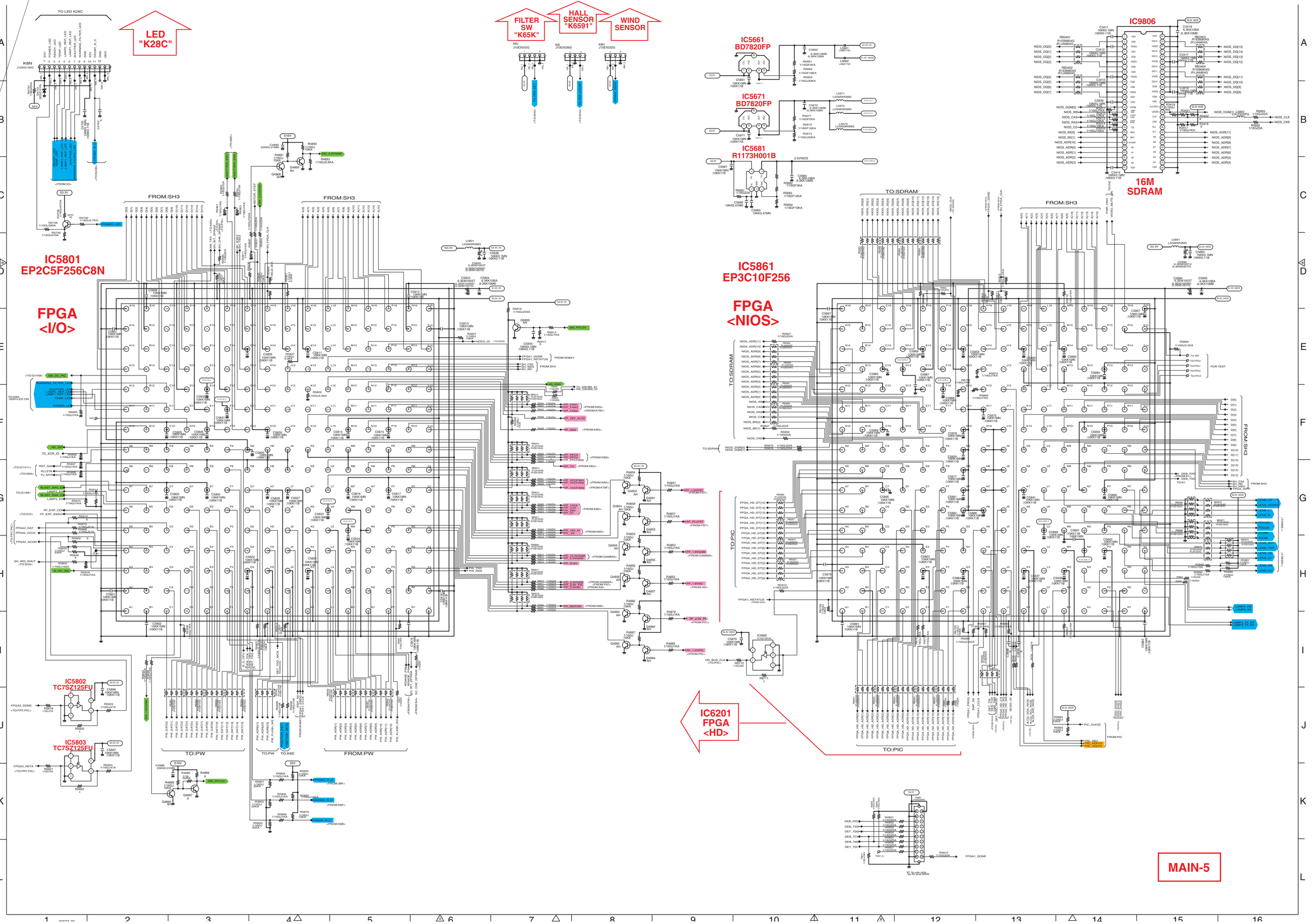
LED "K28C"
FILTER SW "K65K"
HALL SENSOR "K6591"
WIND SENSOR
IC5661 BD7820FP
IC5671 BD7820FP
IC5681 R1173H001B
IC9806
16M SDRAM
IC5801 EP2C5F256C8N
FPGA <I/O>
IC5861 EP3C10F256
FPGA <NIOS>
IC6201 FPGA <HD>
IC5802 TC7SZ125FU
IC5803 TC7SZ125FU
FROM:SH3
TO:SDRAM
TO:PIC
TO:PW
FROM:PW
MAIN-5

SCH_KE8A

A11

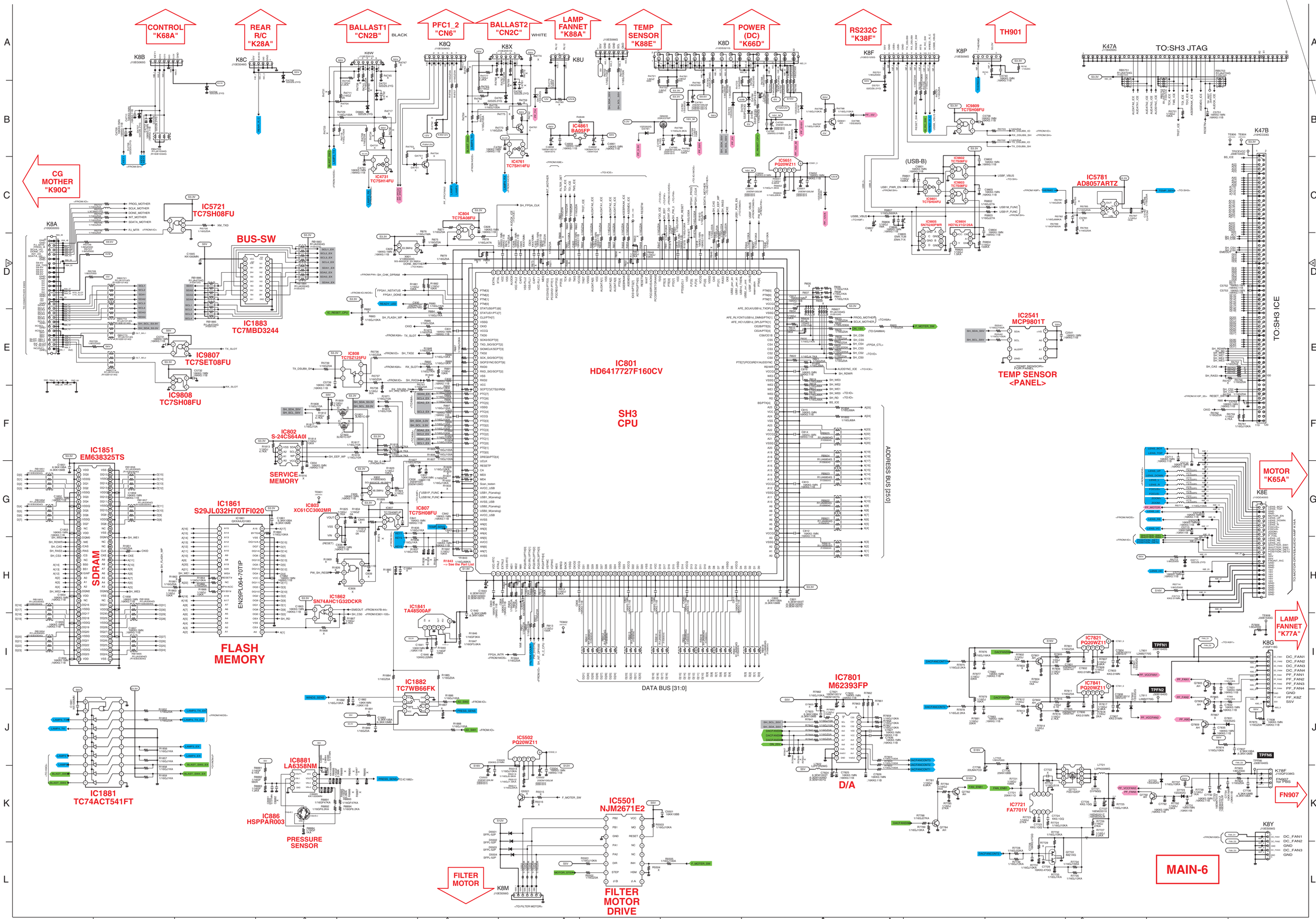
CONTROL "K68A"
REAR R/C "K28A"
BALLAST1 "CN2B"
BLACK
PFC1_2 "CN6"
BALLAST2 "CN2C"
WHITE
LAMP FANNET "K88A"
TEMP SENSOR "K88E"
POWER (DC) "K66D"
RS232C "K38F"
TH901
TO:SH3 JTAG
CG MOTHER "K90Q"
IC5721 TC7SH08FU
BUS-SW
IC1883 TC7MBD3244
IC9807 TC7SET08FU
IC9808 TC7SH08FU
IC808 TC7SZ125FU
IC804 TC7SA08FU
IC4861 BA05FP
IC4761 TC7SH14FU
IC4731 TC7SH14FU
IC5651 PQ20WZ11
IC9809 TC7SH08FU
IC9802 TC7SH08FU
IC9803 TC7SH08FU
IC9801 TC7SH04FU
IC9805 SN74AHC1G32DCKR
IC9804 HD74LV1G126A
IC5781 AD8057ARTZ
IC2541 MCP9801T
TEMP SENSOR <PANEL>
IC801 HD6417727F160CV
SH3 CPU
ADDRESS BUS [25:0]
DATA BUS [31:0]
TO:SH3 ICE
IC1851 EM638325TS
SDRAM
IC802 S-24CS64A0I
SERVICE MEMORY
IC803 XC61CC3002MR
IC807 TC7SH08FU
IC1861 S29JL032H70TFI020
EN29PL064-70TIP
FLASH MEMORY
IC1862 SN74AHC1G32DCKR
IC1841 TA48S00AF
IC1882 TC7WB66FK
IC1881 TC74ACT541FT
IC8881 LA6358NM
IC886 HSPPAR003
PRESSURE SENSOR
IC5502 PQ20WZ11
IC5501 NJM2671E2
FILTER MOTOR
FILTER MOTOR DRIVE
MOTOR "K65A"
LAMP FANNET "K77A"
IC7821 PQ20WZ11
IC7841 PQ20WZ11
IC7801 M62393FP
D/A
IC7721 FA7701V
FN907
MAIN-6
TO:SH3 ICE

Printed Wiring Board Diagrams

⚠ CAUTION

This projector is isolated from AC line by using the internal converter transformer.
Please pay attention to the following notes in servicing

1. Do not touch the part on hot side (primary circuit) or both parts on hot and cold sides (secondary circuit) at the same time.
2. Do not shorten the circuit between hot and cold sides.
3. The grounding lead must be connected to the ground of the same circuit when measuring of voltages and waveforms.

FRONT R/C (SIDE:A)

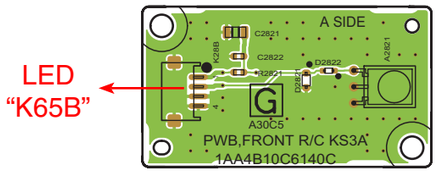

FRONT R/C (SIDE:B)

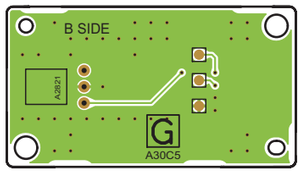

CONTROL (SIDE:A)

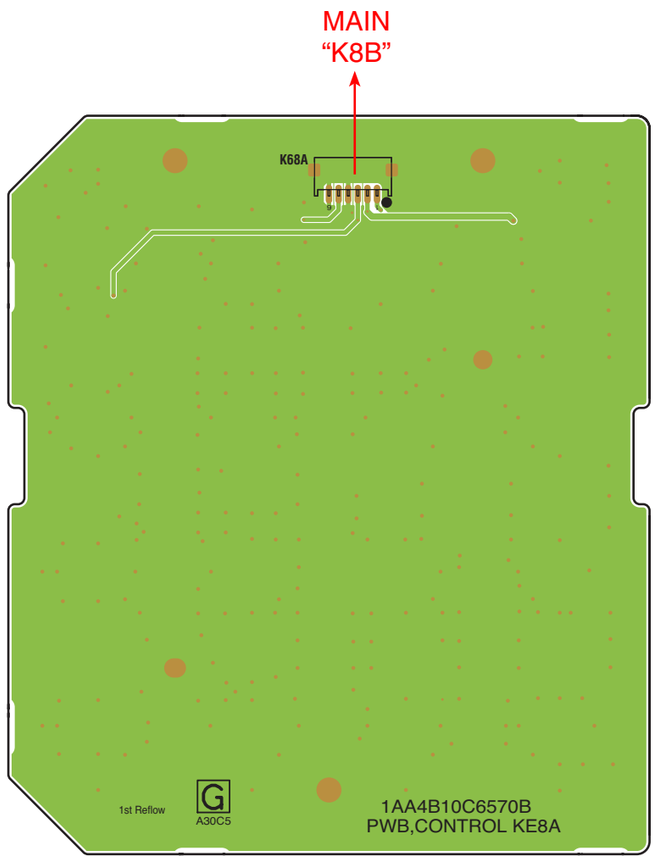

CONTROL (SIDE:B)

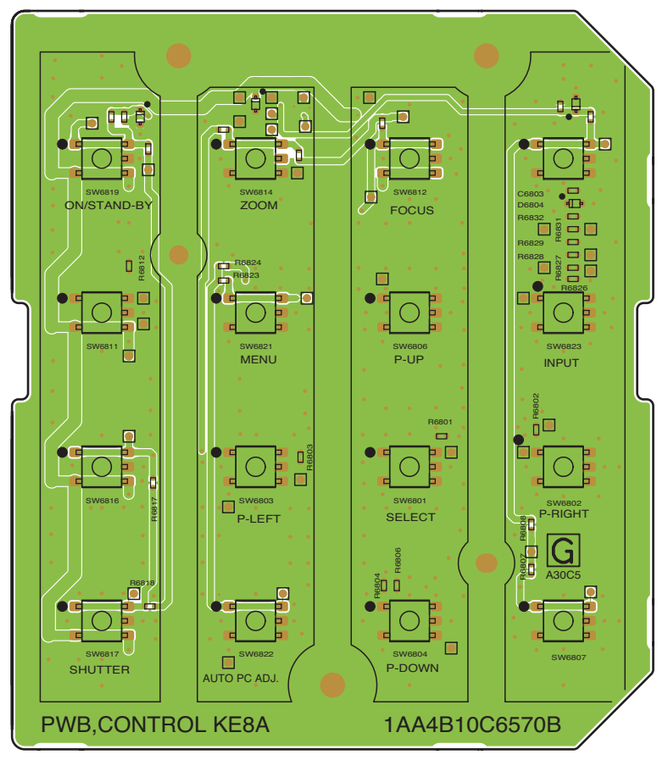

LED (SIDE:A)

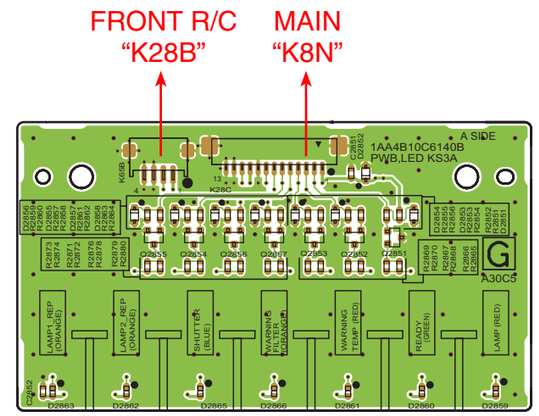

LED (SIDE:B)

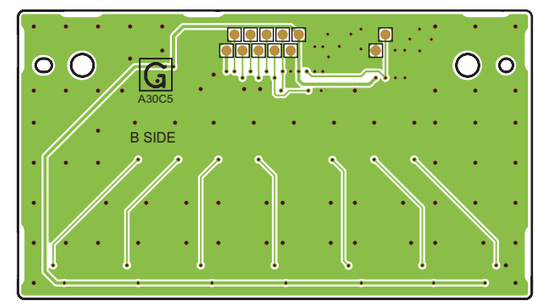

MAIN (SIDE:A)

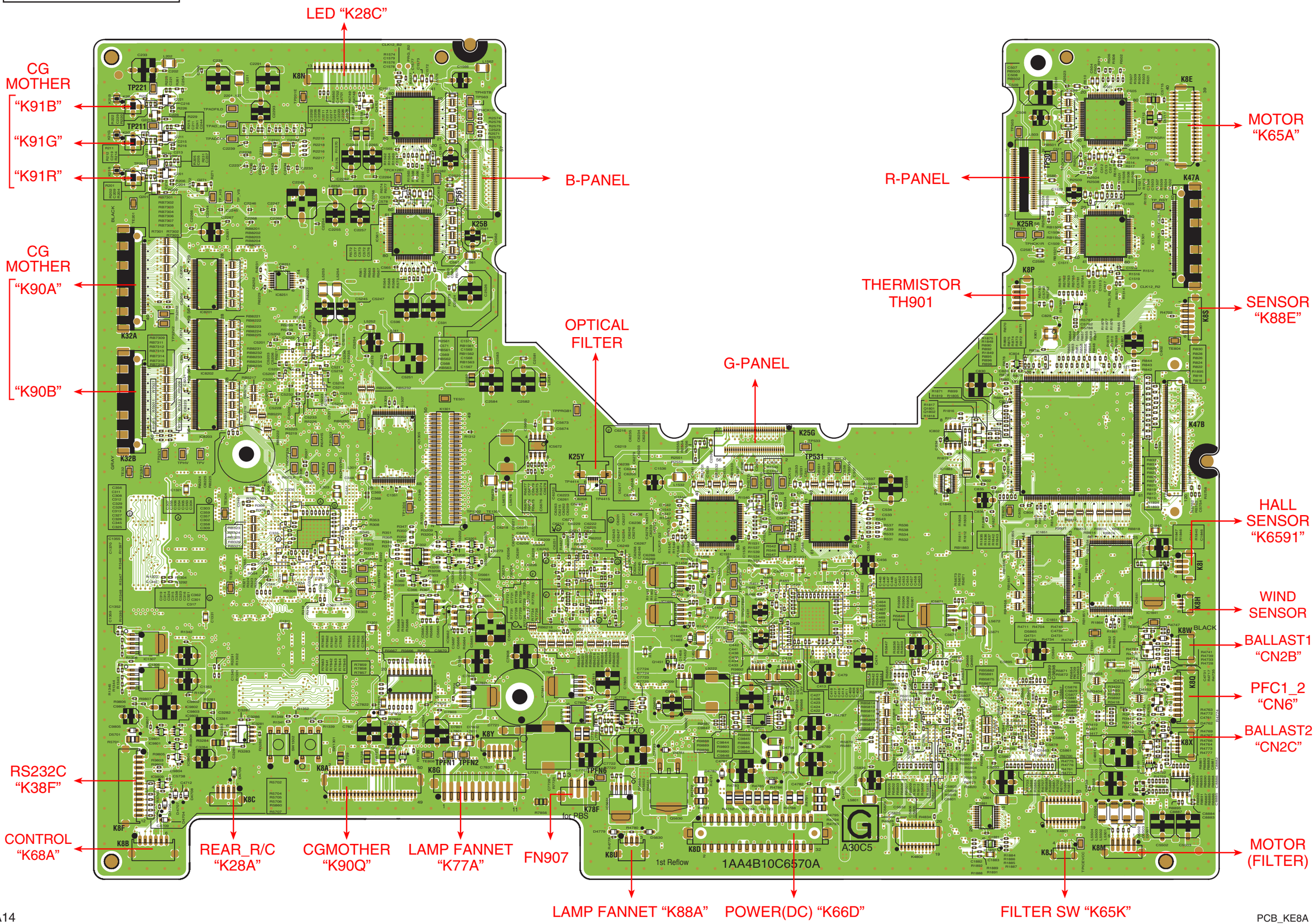
LED "K28C"
CG MOTHER
"K91B"
"K91G"
"K91R"
CG MOTHER
"K90A"
"K90B"
B-PANEL
R-PANEL
MOTOR "K65A"
THERMISTOR TH901
SENSOR "K88E"
OPTICAL FILTER
G-PANEL
HALL SENSOR "K6591"
WIND SENSOR
BALLAST1 "CN2B"
PFC1_2 "CN6"
BALLAST2 "CN2C"
RS232C "K38F"
CONTROL "K68A"
REAR_R/C "K28A"
CGMOTHER "K90Q"
LAMP FANNET "K77A"
FN907
MOTOR (FILTER)
LAMP FANNET "K88A"
POWER(DC) "K66D"
FILTER SW "K65K"
1st Reflow
1AA4B10C6570A
A30C5

MAIN (SIDE:B)

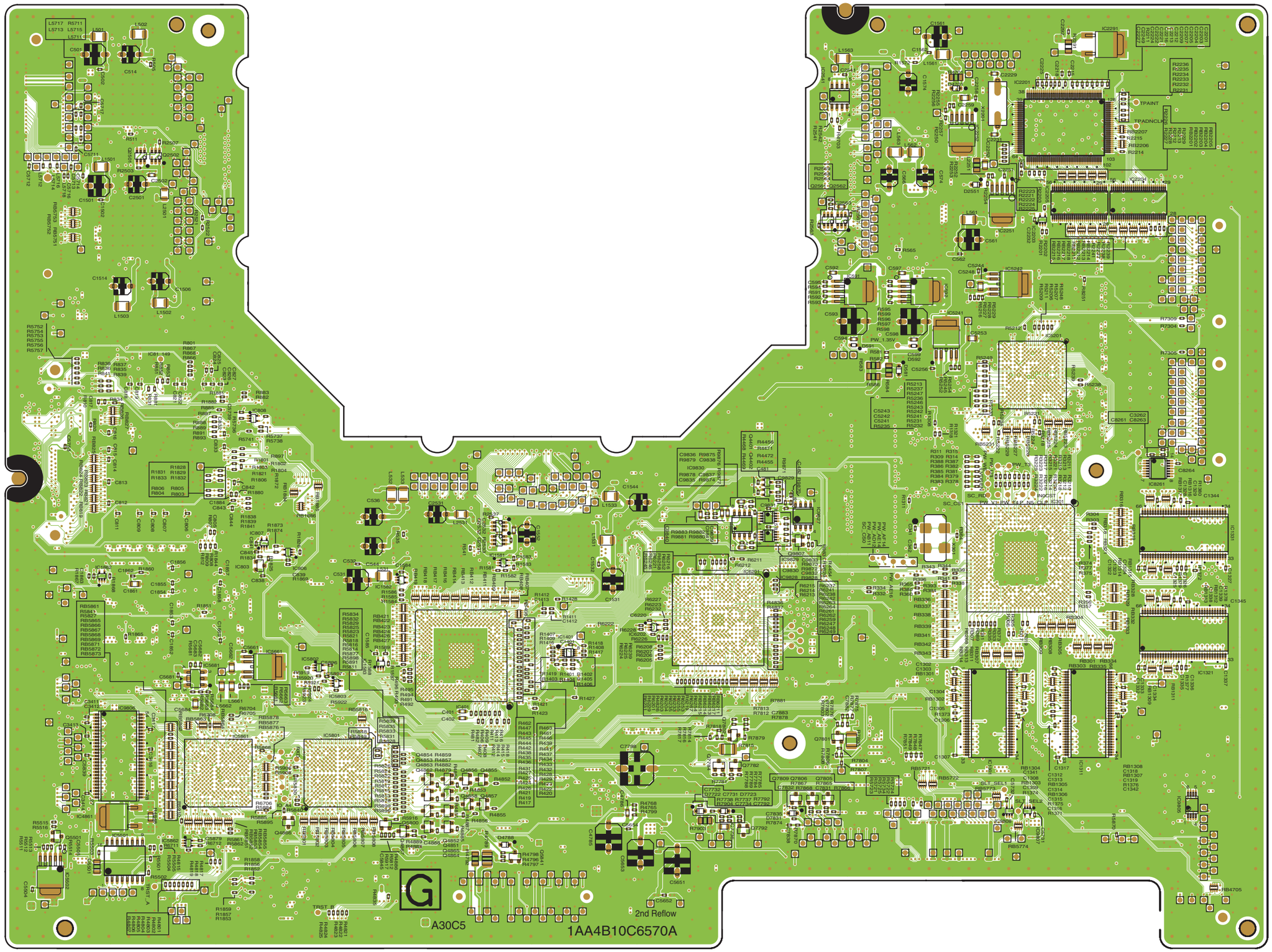

POWER (SIDE:A)

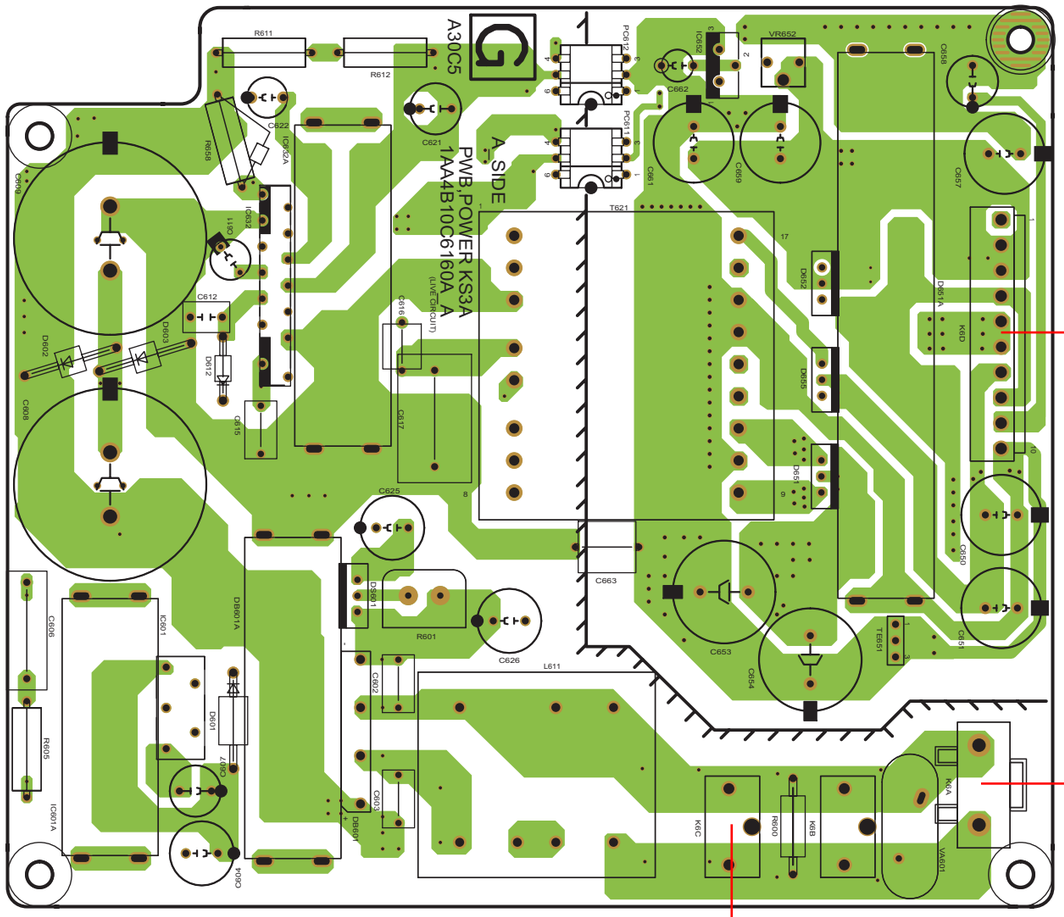

LENS NET (SIDE:A)

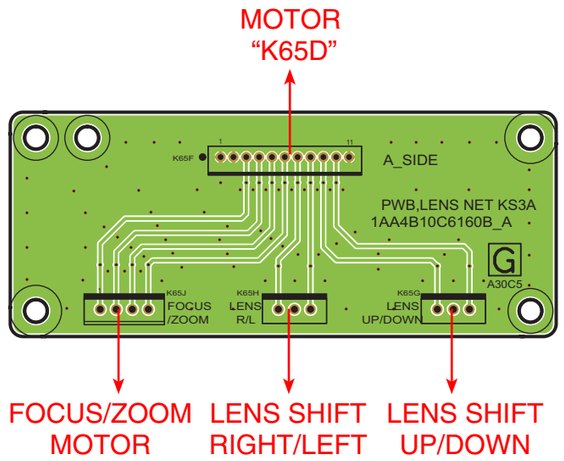

HALL SENSOR (SIDE:A)

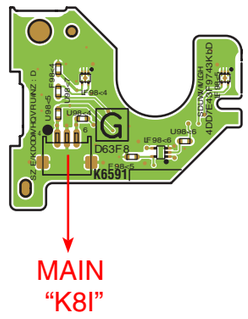

FILTER SW (SIDE:A)

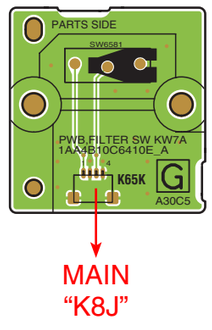

POWER (SIDE:B)

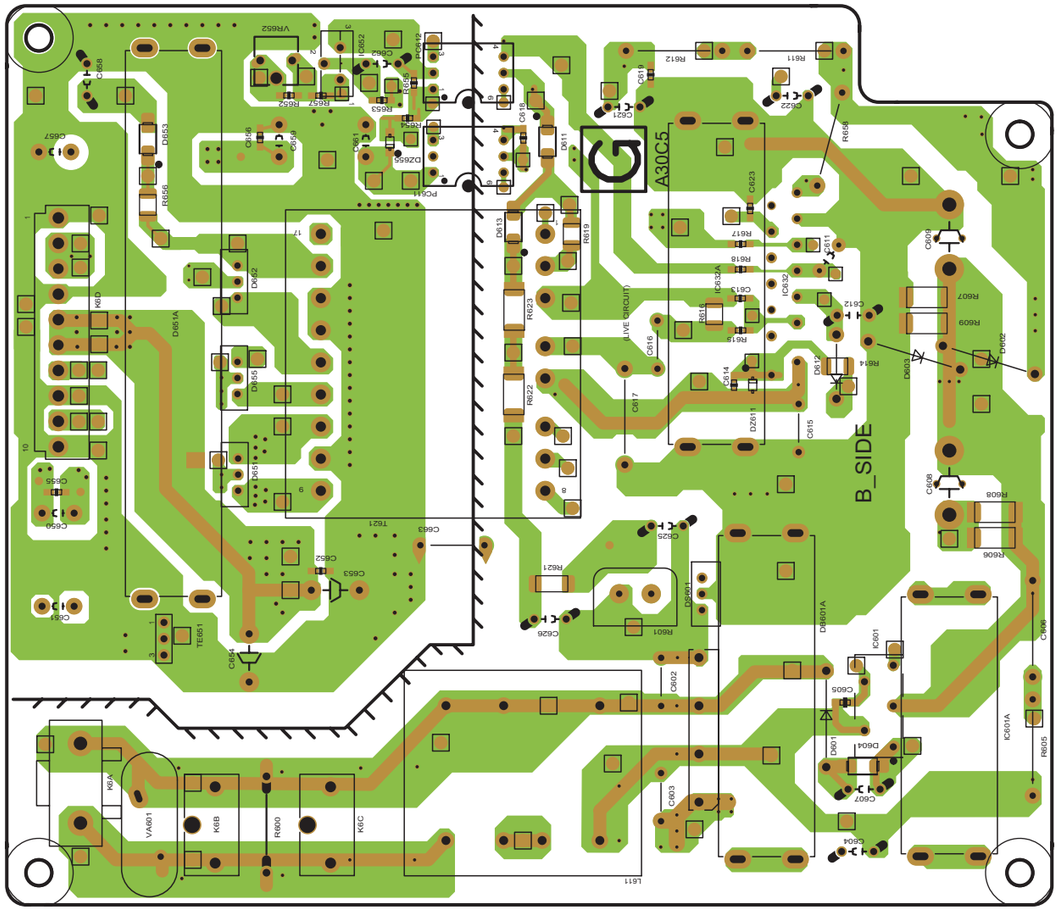

LENS NET (SIDE:B)

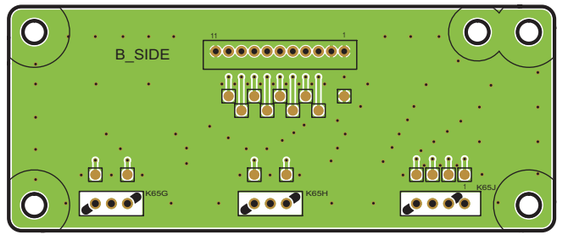

HALL SENSOR (SIDE:B)

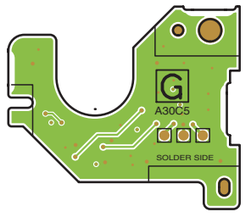

FILTER SW (SIDE:B)

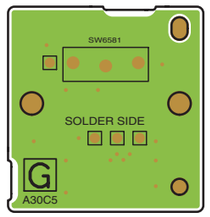

AV/DVI (SIDE:A)

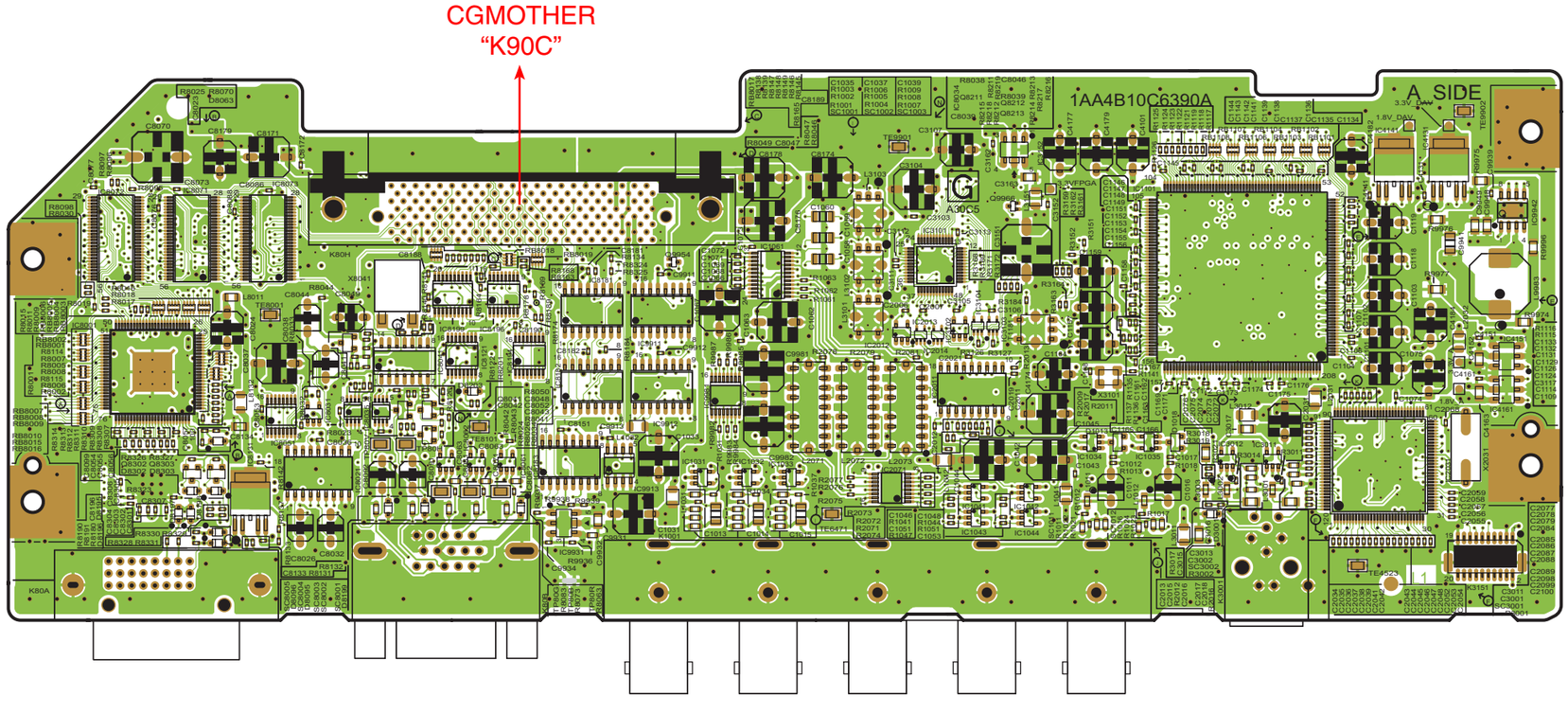

REAR R/C (SIDE:A)

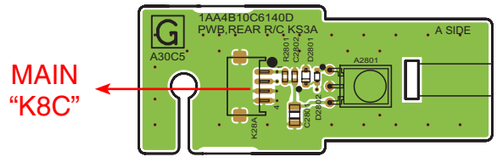

REAR R/C (SIDE:B)

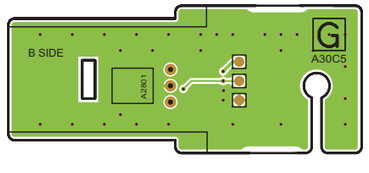

AV/DVI (SIDE:B)

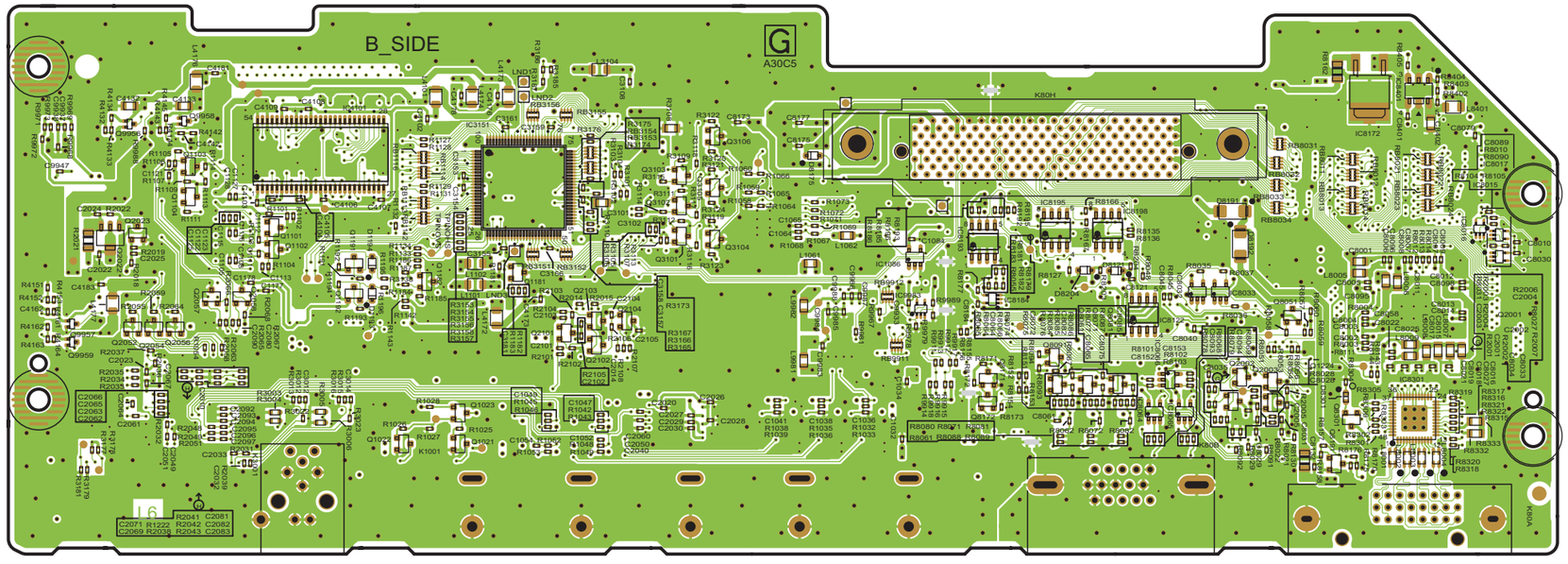

MOTOR (SIDE:A)

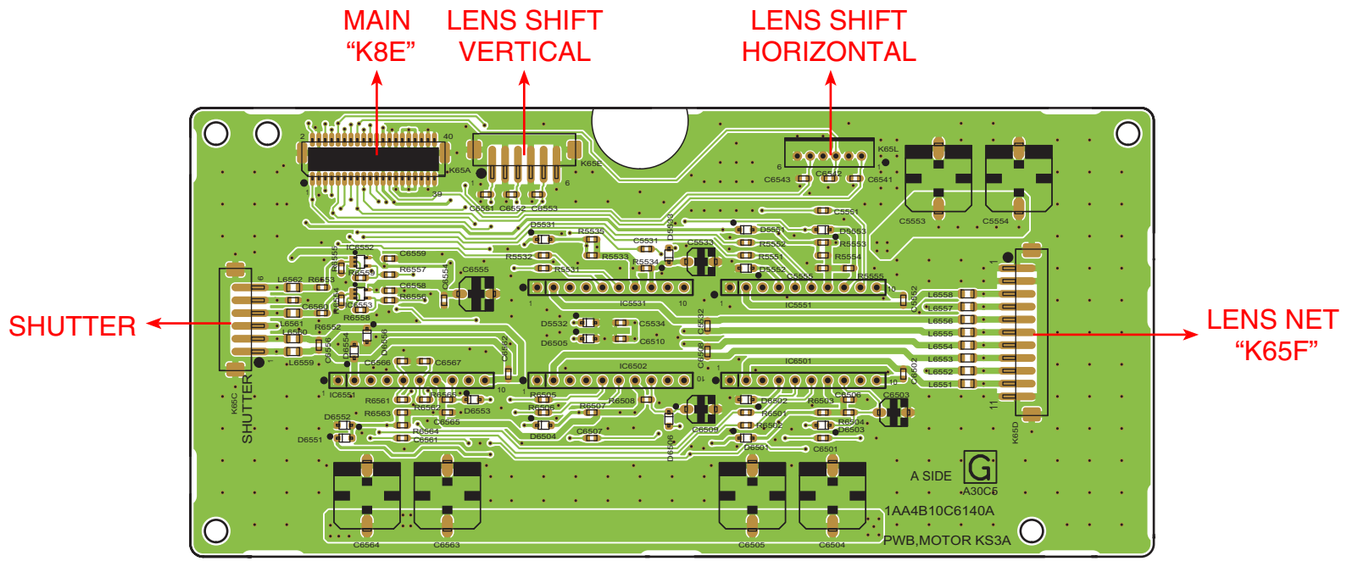

RGB FANNET (SIDE:A)

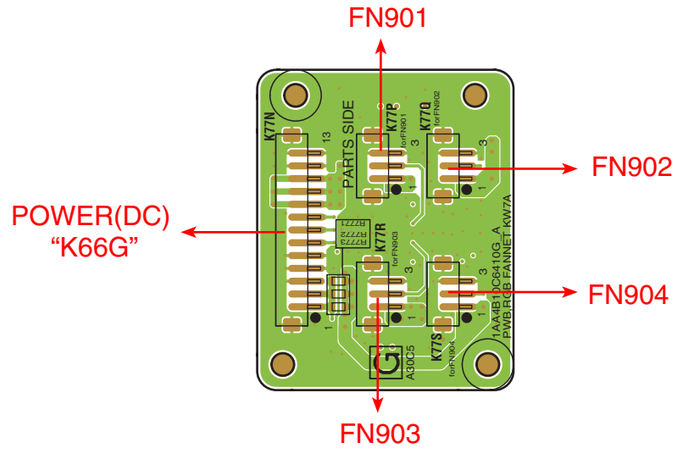

RGB FANNET (SIDE:B)

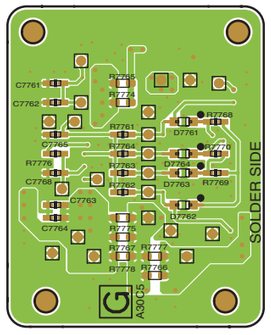

MOTOR (SIDE:B)

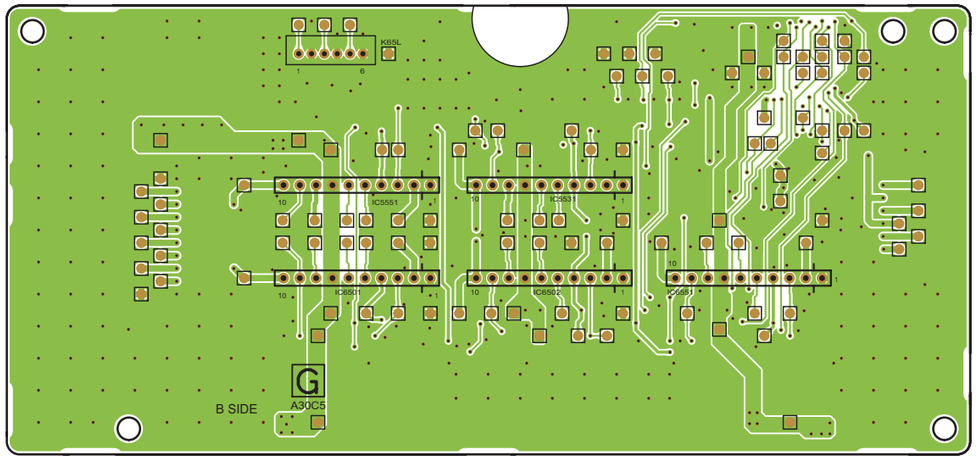

CGMOTHER (SIDE:A)

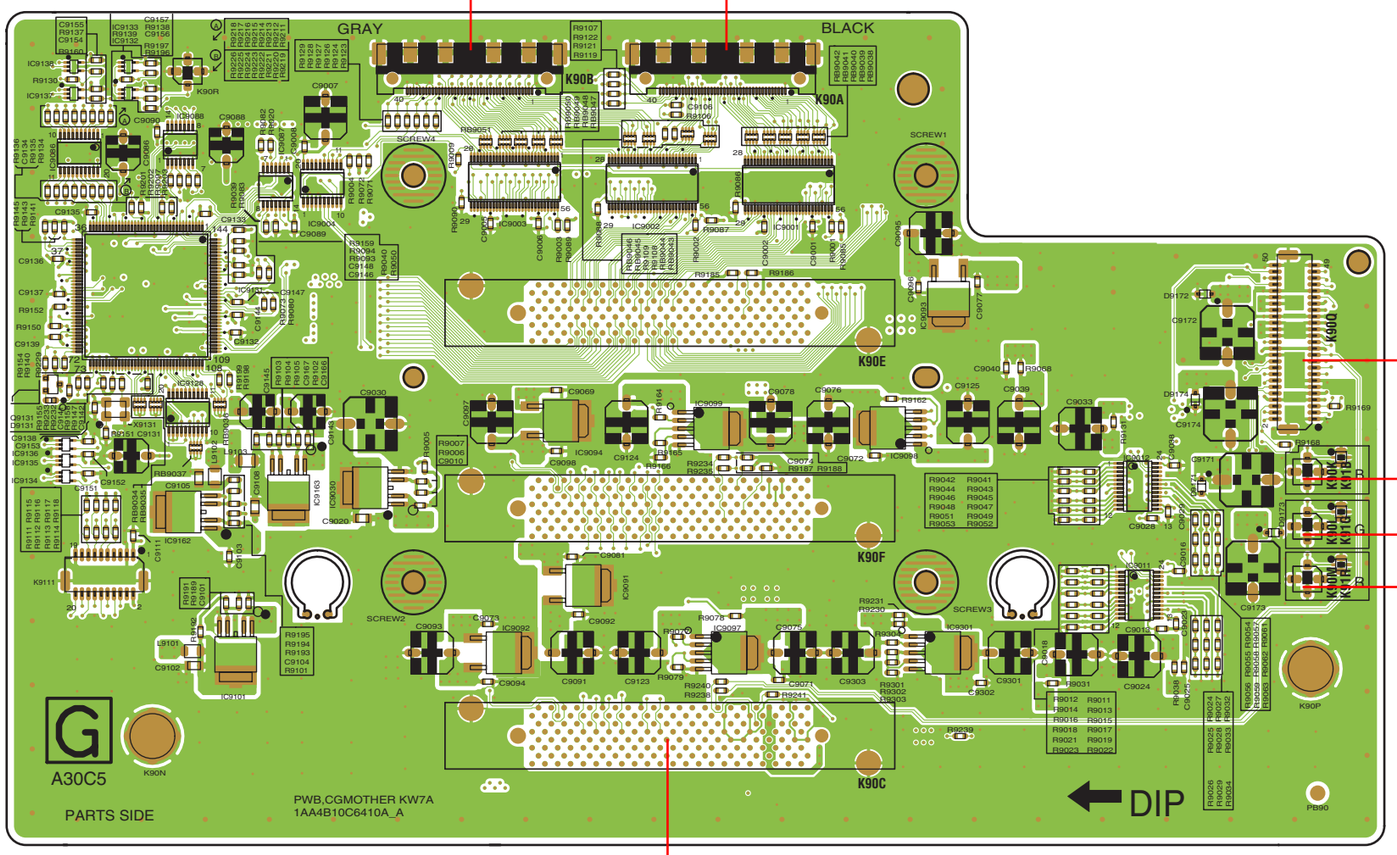

RS232C (SIDE:A)

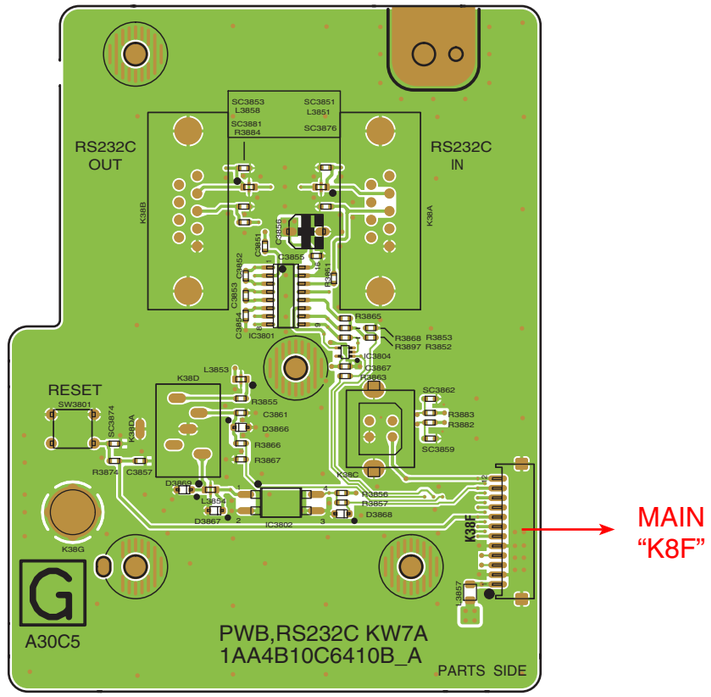

LAMP FANNET (SIDE:A)

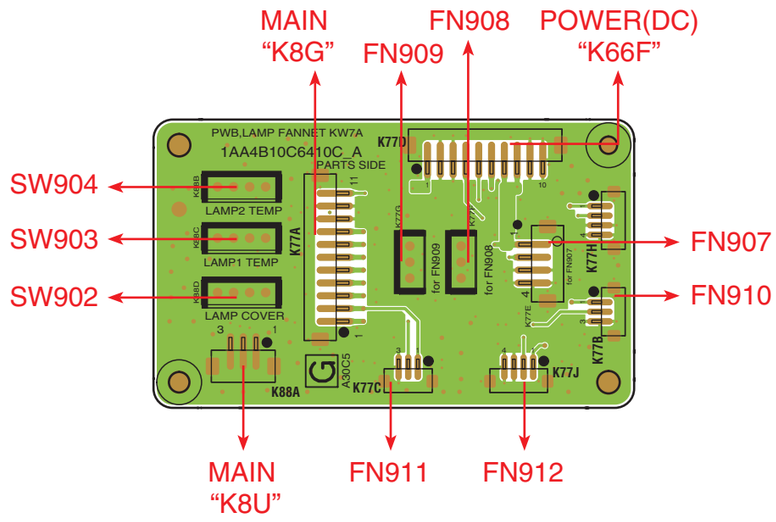

SENSOR (SIDE:A)

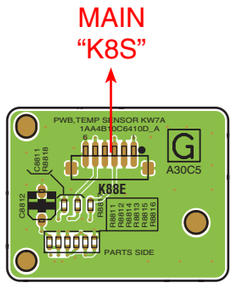

F-G NET (SIDE:A)

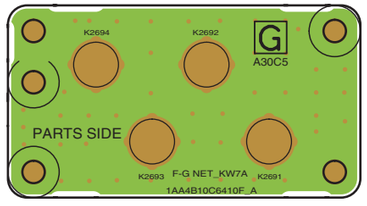

CGMOTHER (SIDE:B)

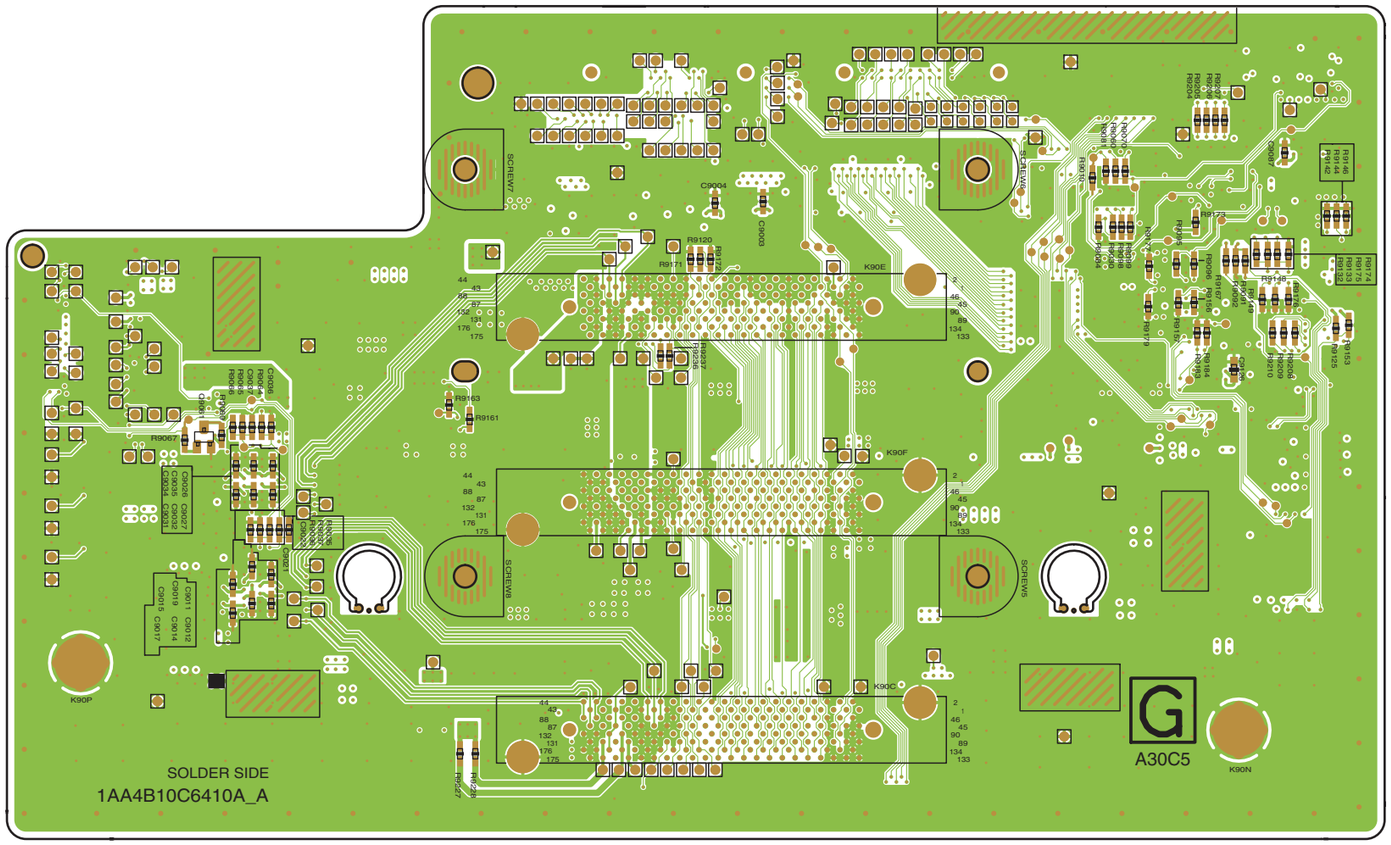

RS232C (SIDE:B)

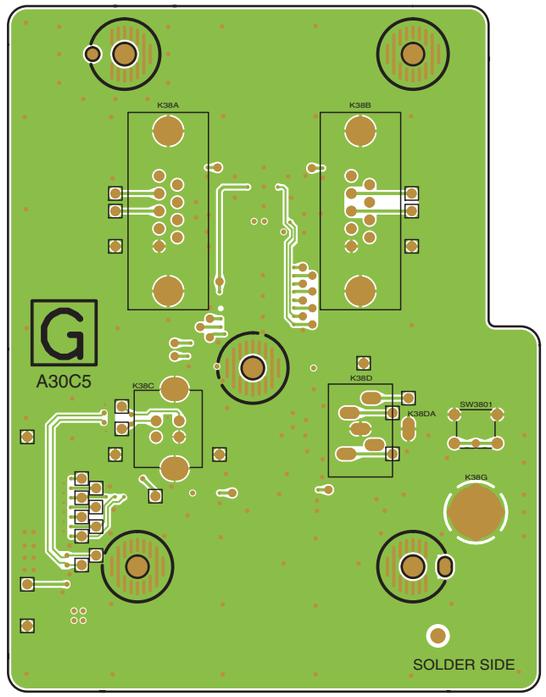

LAMP FANNET (SIDE:B)

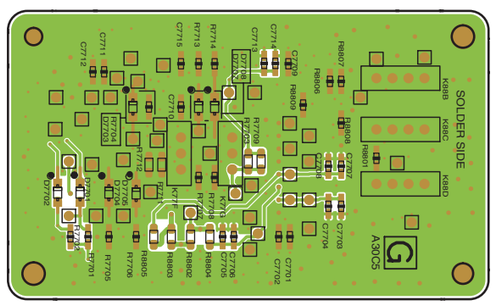

SENSOR (SIDE:B)

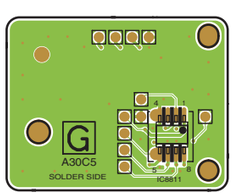

F-G NET (SIDE:B)

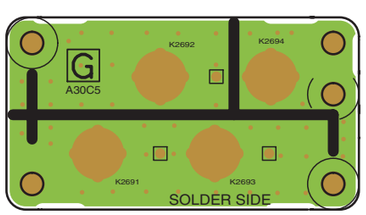

PFC1-2 (SIDE:A)

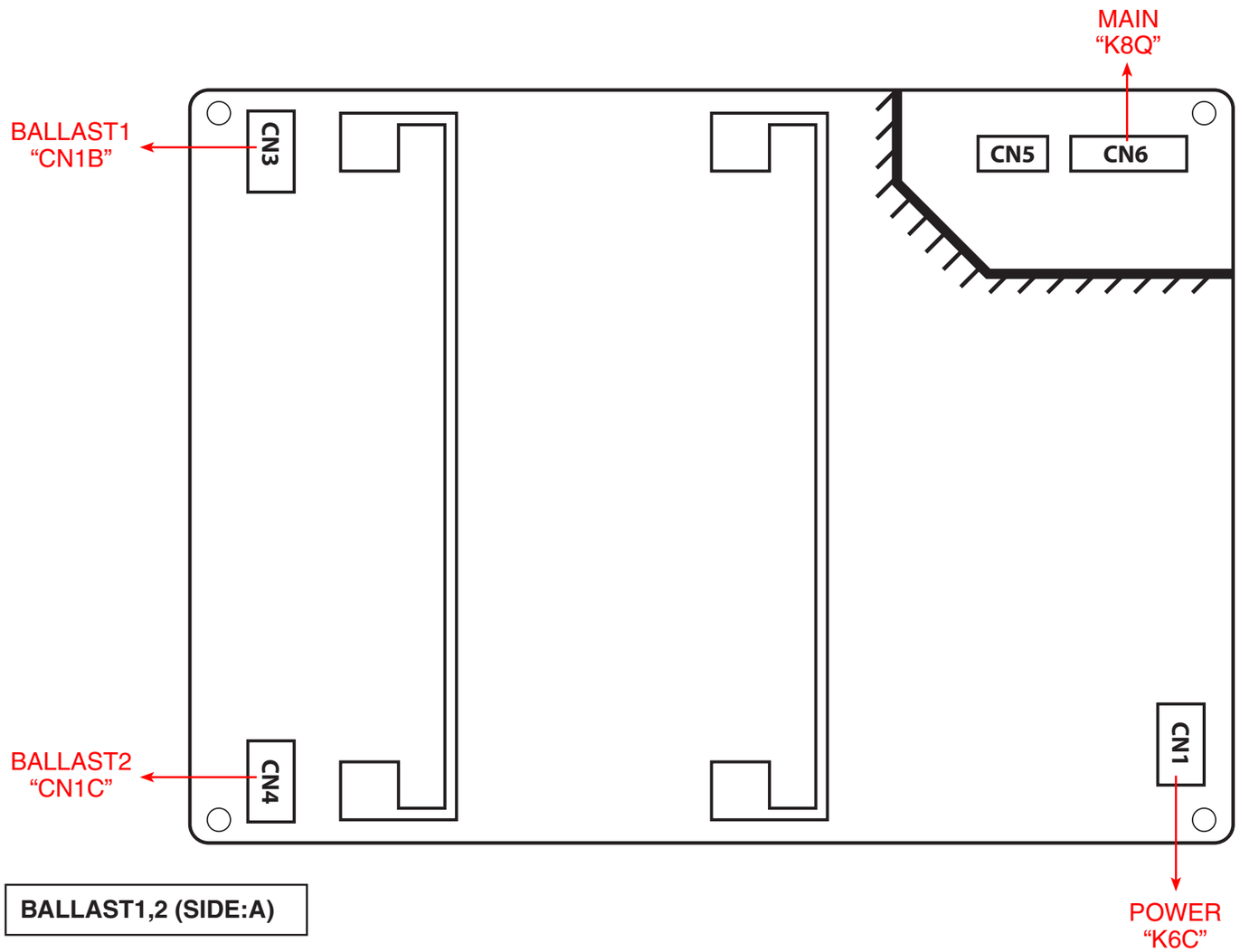

POWER(DC) (SIDE:A)

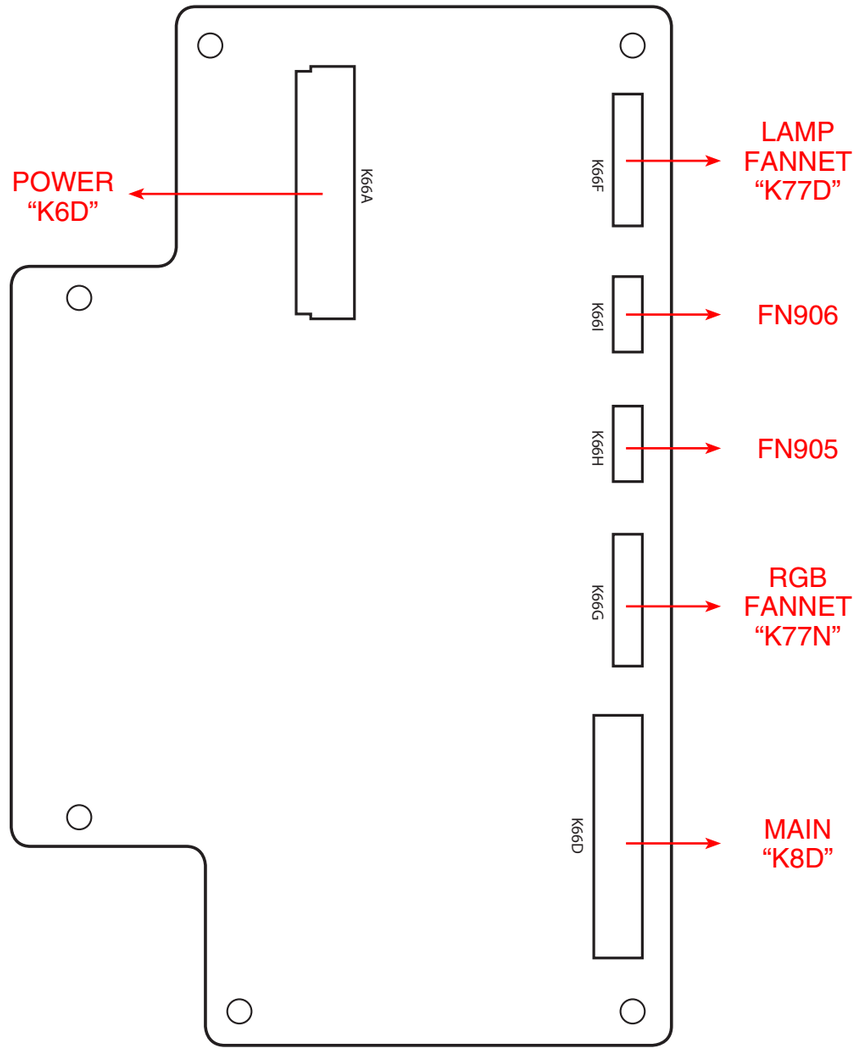
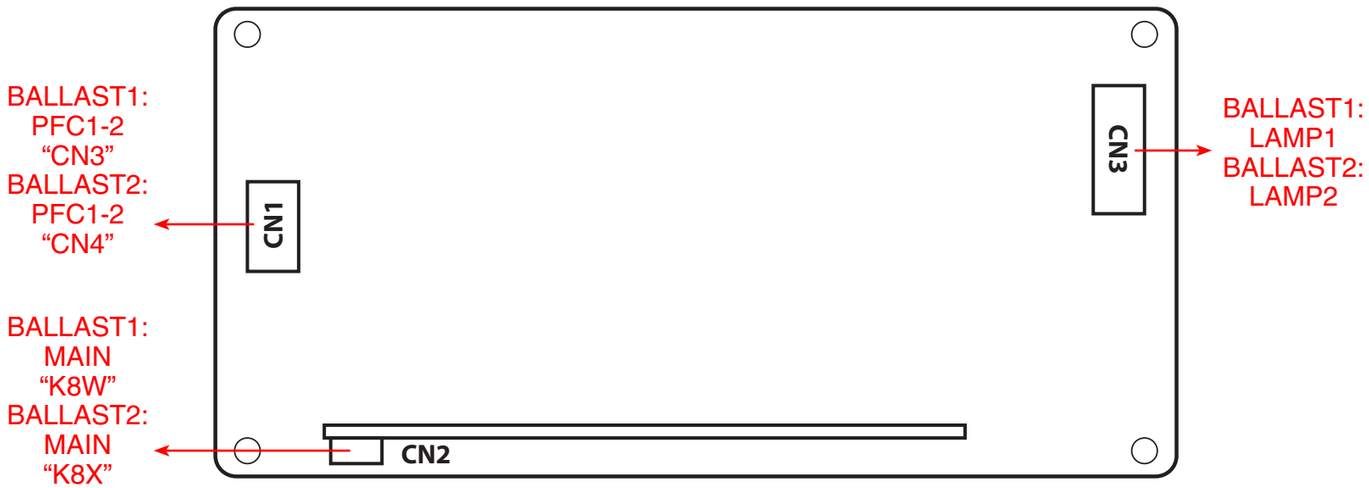
BALLAST1,2 (SIDE:A)