EIKI

FILE NO.

SERVICE MANUAL **Multimedia Projector** **Model No. LC-WB200**

U.S.A, Canada,
Europe, Hong Kong

Original Version

Chassis No. KC2-WB20000

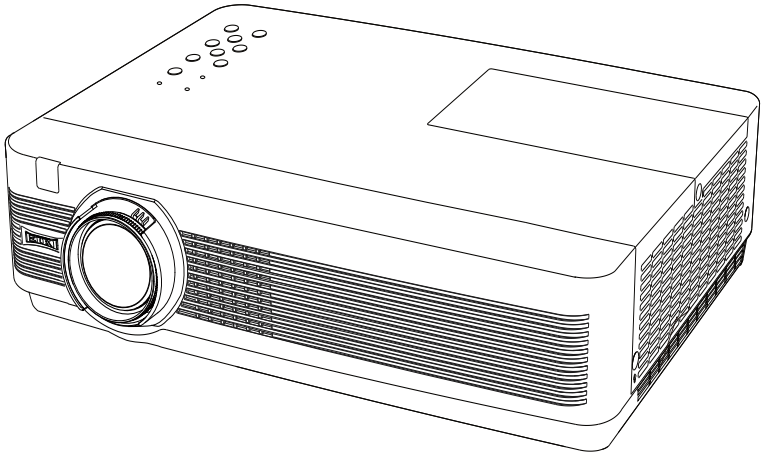

Give complete" Chassis No." for parts order or servicing, it is shown on the rating sheet on the cabinet on the projector.

FOREWORD

For your convenience, all service parts, identified in this manual are available through Eiki's normal distribution channels. In addition to service part number, the generic descriptions have been given, where possible, to allow your service technicians to substitute equivalent components which might be available from other sources.
All orders for service parts will be honored. However, in instances where generic components are considered to be available from several common sources, as would be the case with an industry standard fuse, resistor, or semiconductor, it may be more economical and expeditious to purchase the part locally.

PRODUCT CODE
LC-WB200
1 122 545 01 (KC2BC)
1 122 550 01 (LC2BC)
1 122 550 06 (LC2GC)

REFERENCE NO. SM5111354-00

Contents

Safety Instructions

Safety Precautions

WARNING:
The chassis of this projector is isolated (COLD) from AC line by using the converter transformer. Primary side of the converter and lamp power supply unit circuit is connected to the AC line and it is hot, which hot circuit is identified with the line (⩞) in the schematic diagram. For continued product safety and protection of personnel injury, servicing should be made with qualified personnel.

The following precautions must be observed.

1: An isolation transformer should be connected in the power line between the projector and the AC line before any service is performed on the projector.

2: Comply with all caution and safety-related notes provided on the cabinet back, cabinet bottom, inside the cabinet or on the chassis.

3: When replacing a chassis in the cabinet, always be certain that all the protective devices are installed properly, such as, control knobs, adjustment covers or shields, barriers, etc.

DO NOT OPERATE THIS PROJECTOR WITHOUT THE PROTECTIVE SHIELD IN POSITION AND PR OPERLY SECURED.

4: Before replacing the cabinet cover, thoroughly inspect the inside of the cabinet to see that no stray parts or tools have been left inside.

Before returning any projector to the customer, the service personnel must be sure it is completely safe to operate without danger of electric shock.

Product Safety Notice

Product safety should be considered when a component replacement is made in any area of the projector. Components indicated by mark ⚠ in the parts list and the schematic diagram designate components in which safety can be of special significance. It is, therefore, particularly recommended that the replacement of there parts must be made by exactly the same parts.

Service Personnel Warning

Eye damage may result from directly viewing the light produced by the Lamp used in this equipment. Always turn off Lamp before opening cover. The Ultraviolet radiation eye protection required during this servicing.
Never turn the power on without the lamp to avoid electric-shock or damage of the devices since the stabilizer generates high voltages (15kV - 25kV) at its starts.
Since the lamp is very high temperature during units operation replacement of the lamp should be done at least one hour after the power has been turned off, to allow the lamp cool-off.

Specifications

Mechanical Information	
Projector Type	Multi-media Projector
Dimensions (W x H x D)	13.78" x 3.44" x 10.02" (350.0 mm X 87.5 mm X 254.4 mm) (Not including protrusions)
Net Weight	7.51 lbs (3.4 kg)
Feet Adjustment	0˚ to 12˚
Panel Resolution	
LCD Panel System	0.59" TFT Active Matrix type, 3 panels
Panel Resolution	1,280 x 800 dots
Number of Pixels	3,072,000 (1,280 x 800 x 3 panels)
Signal Compatibility	
Color System	PAL, SECAM, NTSC, NTSC4.43, PAL-M, and PAL-N
SD/HD TV Signal	Component: 480i, 480p, 575i, 575p, 720p, 1035i and 1080i HDMI: 480p, 575p, 720p, 1080i and 1080p
Input Scanning Frequency	H-sync. 15kHz–100 kHz, V-sync. 50–100 Hz
Optical Information	
Projection Image Size (Diagonal)	Adjustable from 30” to 300”
Throw Distance	2.4' ~ 25.2' (0.74 m ~ 7.67 m)
Projection Lens	F 1.65 ~ 2.33 lens with f 15.47 mm ~ 24.53 mm with manual zoom and focus
Projection Lamp	245 W
Interface	
Video Input Jack	RCA Type x 1
S-video Input Jack	Mini DIN 4 pin x 1
Audio Input Jacks	RCA Type x 2
Computer 1/Computer 2 Audio Input Jacks	Mini Jack (stereo) x 2
Computer In 1/Component Input Terminal	Mini D-sub 15 pin x 1
Computer In 2/Monitor Output Terminal	Mini D-sub 15 pin x 1
Control Port	D-sub 9 pin x 1
Audio Output Jack	Mini Jack (stereo) x 1 (variable)
LAN Connection Terminal	RJ-45
HDMI	HDMI (V.1.3 with Deep Color) x 1
Audio	
Internal Audio Amp	10 W RMS
Built-in Speaker	1 speaker, ø1.5"(37 mm)
Power	
Voltage and Power Consumption	AC 100–240 V (3.8-1.8 A Max.), 50/60 Hz
Operating Environment	
Operating Temperature	41˚F–95˚F (5 ˚C–35 ˚C)
Storage Temperature	14˚F–140˚F (-10˚C–60 ˚C)
Remote Control	
Battery	AAA or LR03 1.5V Alkaline Type x2
Operating Range	16.4' (5 m)/±30˚
Dimensions	2.0" (W) x 0.7" (H) x 4.3" (D) (52 mm x 18 mm x 110 mm)
Net Weight	2.37 oz (67 g) (including batteries)

- The specifications are subject to change without notice.
- LCD panels are manufactured to the highest possible standards. Even though 99.99% of the pixels are effective, a tiny fraction of the pixels (0.01% or less) may be ineffective by the characteristics of the LCD panels.

C UL US LISTED

This symbol on the nameplate means the product is Listed by Underwriters Laboratories Inc. It is designed and manufactured to meet rigid U.L. safety standards against risk of fire, casualty and electrical hazards.

Circuit Protections

This projector provides the following circuit protections to operate in safety. If the abnormality occurs inside the projector, it will automatically turn off by operating one of the following protection circuits.

Thermal switch

There is the thermal switch (SW902) inside of the projector to detect the internal temperature rising abnormally. When the internal temperature reaches near 115˚C, the thermal switch opens to stop the operation of the power supply circuit.

When the internal temperature reaches near 75˚C, the thermal switch returns automatically.

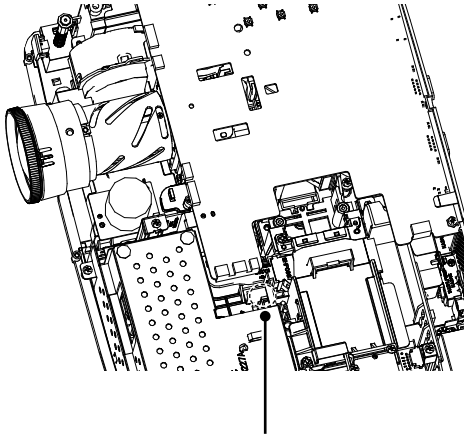

Thermal switch (SW902)

Lamp cover switch

The lamp cover switch (SW901) cuts off the drive signal to the lamp circuit when the lamp cover is removed or not closed completely. After opening the lamp cover for replacing the lamp ass'y, place the lamp cover correctly otherwise the projector can not turn on.

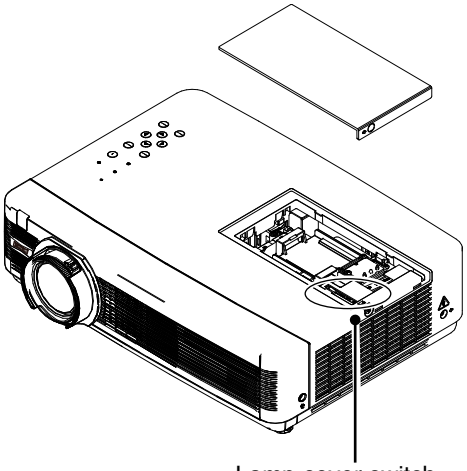

Lamp cover switch (SW901)

Fuse

A fuse is located inside of the projector. When the POWER indicator is not lighting, the fuse may be opened. Check the fuse as following steps.
The fuse should be used with the following type;

Fuse Part No.: 323 021 7804
TYPE T6.3AH 250V FUSE
LITTEL FUSE INC. TYPE 21506.3

or

Fuse Part No, : 423 034 4101
TYPE T6.3AH 250V FUSE
Hollyland Co, Ltd. TYPE 50CT063H

How to replace the fuse

1. The fuse is placed on the filter board. Remove the cabinet top following the "Mechanical Disassembly" .
2. Take the fuse off from the fuse holder, and replace the new one with the specified type.

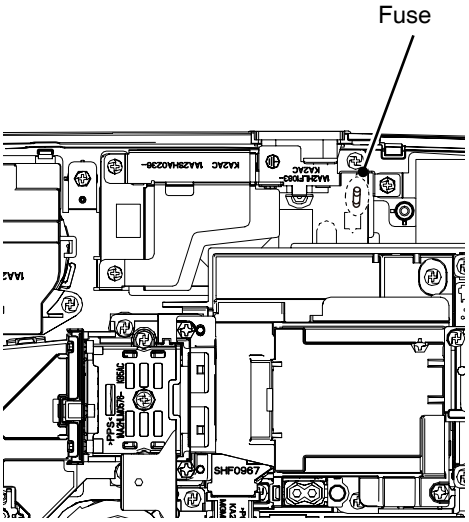

Warning temperature and power failure protection

The projector will be automatically turned off when the internal temperature of the projector is abnormally high, or the cooling fans stop spinning, or the power supplies in the projector are failed.

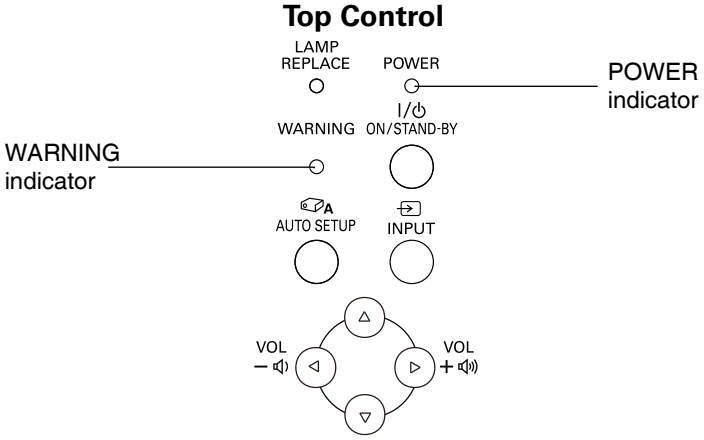

The projector is shut down and the WARNING indicator is blinking red.

When the temperature inside the projector reaches a certain level, the projector will be automatically shut down to protect the inside of the projector and the WARNING and POWER indicators start blinking. When the projector has cooled down enough (to its normal operating temperature), the POWER indicator stops blinking and lights red, The projector can be turned on again by pressing the ON/STAND-BY button.

✔ **Note:**
The WARNING indicator continues to blink even after the temperature inside the projector returns to normal. When the projector is turned on again, the WARNING indicator stops blinking.

Check items
- Remove dust around the air filter.
- Ventilation slots of the projector are blocked. In such an event, reposition the projector so that ventilation slots are not obstructed.
- Check if projector is used at higher temperature place (Normal operating temperature is 5 to 35 ˚C or 41 to 95˚F)

The projector is shut down and the WARNING indicator lights red.

When the projector detects an abnormal condition, it is automatically shut down to protect the inside of the projector and the WARNING indicator lights red. In this case, unplug the AC power cord and reconnect it, and then turn the projector on once again to verify operation.

✔ **Note:**
- If the WARNING indicator lights red, it may defect the cooling fans or power supply circuits. Check fans operation and power supply lines referring to the chapter “Power supply & protection circuit” and "Fan control circuit" in the Chassis Block Diagram section.

WARNING
DO NOT LEAVE THE PROJECTOR WITH THE AC POWER CORD CONNECTED UNDER AN ABNORMAL CONDITION. IT MAY RESULT IN FIRE OR ELECTRIC SHOCK.

Maintenance

Replace the Filters

Filter prevents dust from accumulating on the optical elements inside the projector. Should the filter become clogged with dust particles, it will reduce cooling fans' effectiveness and may result in internal heat buildup and adversely affect the life of the projector. If a "Filter warning" icon appears on the screen, replace the filters immediately. Replace the filters by following the steps below.

1 Turn off the projector and unplug the AC power cord from the AC outlet.

2 Turn over the projector and pull out the filter cover (bottom); pull up the handle and take out the whole filter (bottom).
Press up the latches and pull out the filter cover (side); pull out the handle and take out the side filter.

3 Put new filters back into the position. Make sure that the filters are fully inserted to the projector.

4 Connect the AC power cord to the projector and turn on the projector.

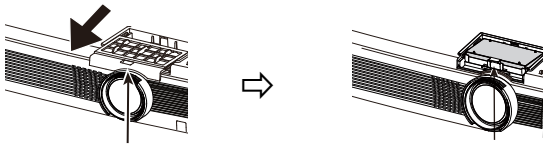

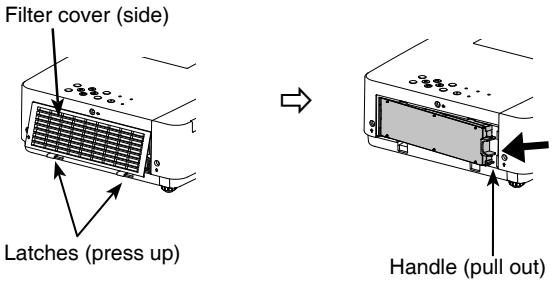

CAUTION
–Do not operate the projector with the filters removed. Dust may accumulate on the optical elements degrading picture quality.
–Do not put anything into the air vents. Doing so may result in malfunction of the projector.
–Do not wash the filters with water or any other liquid matter. Otherwise the filters may be damaged.

RECOMMENDATION
We recommend avoiding dusty/smoky environments when you operate the projector. Usage in these environments may cause poor image quality.
When using the projector under dusty or smoky conditions, dust may accumulate on a lens, LCD panels, or optical elements inside the projector degrading the quality of a projected image. When the symptoms above are noticed, contact your authorized dealer or service center for proper cleaning.

Resetting the Filter Counter

Be sure to reset the Filter counter after replacing the filters.

1 Press the MENU button to display the On-Screen Menu. Use the Point ▲▼ buttons to select the **Setting** Menu and then press the Point ▶ or the SELECT button.

2 Use the Point ▲▼ buttons select Filter counter and then press the Point ▶ or the **SELECT** button. Use the Point ▲▼ buttons to select **Filter counter reset** and then press the **SELECT** button. The **Filter counter Reset?** appears. Select **Yes** to continue.

3 Another confirmation dialog box appears, select **Yes** to reset the Filter counter.

Filter counter

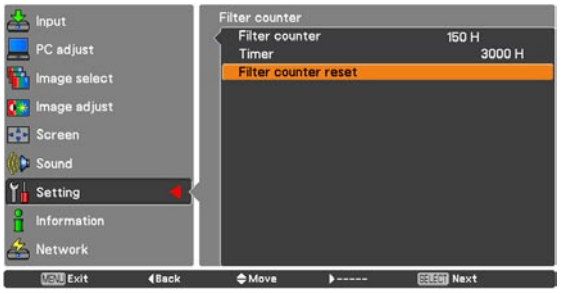

The **Filter counter Reset?** appears.

Select **Yes**, then another confirmation box appears.

Select **Yes** again to reset the Filter counter.

Cleaning

After long periods of use, dust and other particles will accumulate on the LCD panel, prism, mirror, polarized glass, lens, etc., causing the picture to darken or color to blur. If this occurs, clean the inside of optical unit.
Remove dust and other particles using air spray. If dirt cannot be removed by air spray, disassemble and clean the optical unit.

Cleaning with air spray

Remove the cabinet top following to “Mechanical Disassembly”. Clean up the LCD panel and polarizing plate by using the air spray from the cabinet top opening.

Caution:
Use a commercial (inert gas) air spray designed for cleaning camera and computer equipment. Use a resin-based nozzle only. Be very careful not to damage optical parts with the nozzle tip. Never use any kind of cleanser on the unit. Also, never use abrasive materials on the unit as this may cause irreparable damage.

Disassembly Cleaning

Disassembly cleaning method should only be performed when the unit is considerable dirty and cannot be sufficiently cleaned by air spraying alone.
Be sure to readjust the optical system after performing disassembly cleaning.

1. Remove the cabinet top and main units following to “Mechanical Disassembly”.
2. Remove the optical base top following to “Optical Unit Disassembly”. If the LCD panel needs cleaning, remove the LCD panel unit following to “LCD panel replacement”.
3. Clean the optical parts with a soft cloth. Clean extremely dirty areas using a cloth moistened with alcohol.

Caution:
The surface of the optical components consists of multiple dielectric layers with varying degrees of refraction. Never use organic solvents (thinner, etc.) or any kind of cleanser on these components.
Since the LCD panel is equipped with an electronic circuit, never use any liquids (water, etc.) to clean the unit. Use of liquid may cause the unit to malfunction.

Cleaning the Projection Lens

Unplug the AC power cord before cleaning.

Gently wipe the projection lens with a cleaning cloth that contains a small amount of non-abrasive camera lens cleaner, or use a lens cleaning paper or commercially available air blower to clean the lens.

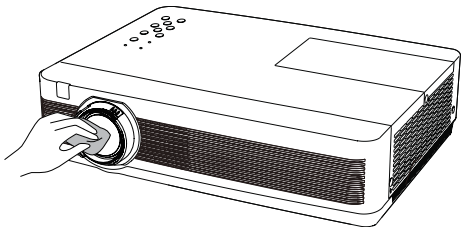

Avoid using an excessive amount of cleaner. Abrasive cleaners, solvents, or other harsh chemicals might scratch the surface of the lens.

Cleaning the Projector Cabinet

Unplug the AC power cord before cleaning.

Gently wipe the projector body with a soft dry cleaning cloth. When the cabinet is heavily soiled, use a small amount of mild detergent and finish with a soft dry cleaning cloth. Avoid using an excessive amount of cleaner. Abrasive cleaners, solvents or other harsh chemicals might scratch the surface of the cabinet.

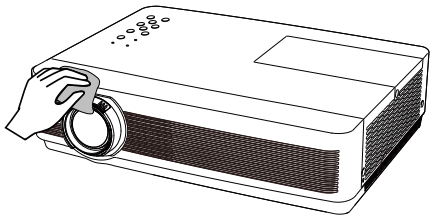

When the projector is not in use, put the projector in an appropriate carrying case to protect it from dust and scratches.

Lamp Replacement

Lamp replacement

WARNING:
- For continued safety, replace with a lamp assembly of the same type.
- Allow the projector to cool for at least one hour before you open the lamp cover. The inside of the projector can become very hot.
- Do not drop the lamp module or touch the glass bulb! The glass can shatter and cause injury.

Procedure

1. Unplug the AC power cord. Let the projector cool for at least 45 minutes.
2. Loosen the screw and open the lamp cover.
3. Loosen the three (3) screws that secure the lamp. Lift the lamp out of the projector by using the handles.
4. Replace the lamp with a new one and secure the three (3) screws. Make sure that the lamp is set properly. Close the lamp cover and secure the screw.
5. Connect the AC power cord to the projector and turn on the projector.

ORDER REPLACEMENT LAMP

Type No.	**POA-LMP148**
Service Parts No.	**610 352 7949**

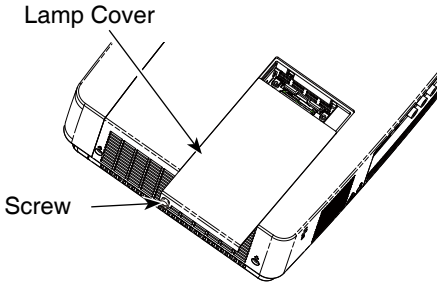

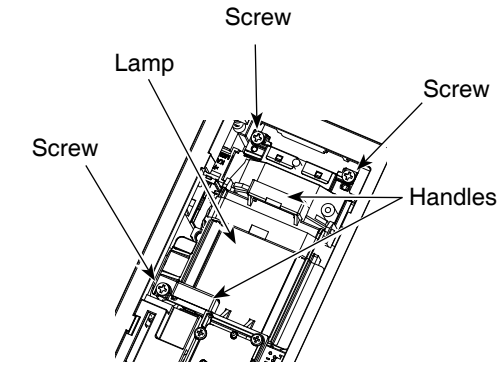

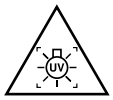

WARNING : TURN OFF THE UV LAMP BEFORE OPENING THE LAMP COVER.
USE UV RADIATION EYE AND SKIN PROTECTION DURING SERVICING.

CAUTION

Allow a projector to cool for at least 45 minutes before you open the Lamp Cover. The inside of the projector can become very hot.

CAUTION

For continued safety, replace with a lamp of the same type. Do not drop a lamp or touch a glass bulb! The glass can shatter and may cause injury.

CAUTION

When replacing the lamp because it has stopped illuminating, there is a possibility that the lamp may be broken.
If replacing the lamp of a projector which has been installed on the ceiling, you should always assume that the lamp is broken, and you should stand to the side of the lamp cover, not underneath it. Remove the lamp cover gently. Small pieces of glass may fall out when the lamp cover is opened. If pieces of glass get into your eyes or mouth, seek medical advice immediately.

How to check Lamp Used Time

The LAMP REPLACE indicator will light yellow when the total lamp used time (Corresponding value) reaches 5,000 hours. This is to indicate that lamp replacement is required.
The tatal lamp used time is calculated by using the below expression,
Total lamp used time

$$= T_{normal} \times 1.67 + T_{eco} + T_{auto} \times k^{*}$$

T_{normal} : used time in the normal mode
T_{eco} : used time in the eco and eco2 mode
T_{auto} : used time in the auto mode
* Factor k is changed from 1.0 to 1.67 automatically depending on the input signal

You can check the lamp used time following to the below procedure.

1 Press and hold the **ON/STAND-BY** button on the projector or the remote control for more than 20 seconds.

2 The projector used time and lamp used time will be displayed on the screen briefly as figure.

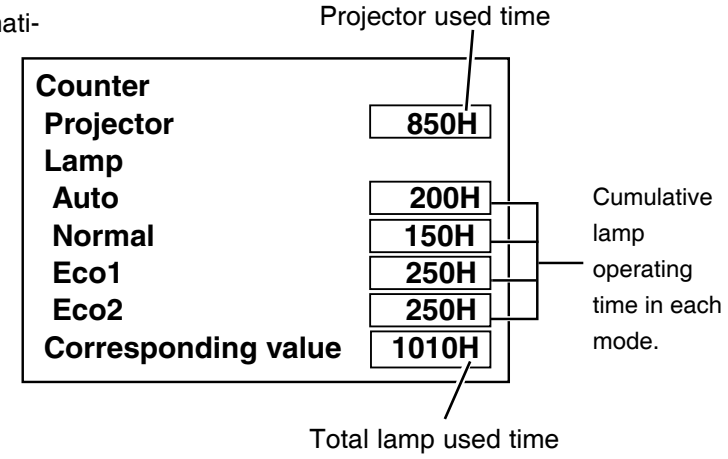

Warning Message on the non-standard lamp used

If the non-standard lamp is used, the warning and confirmation messages will appear on the screen every startup. Some of the functions are limited when the non-standard lamp is used in spite of the warning.

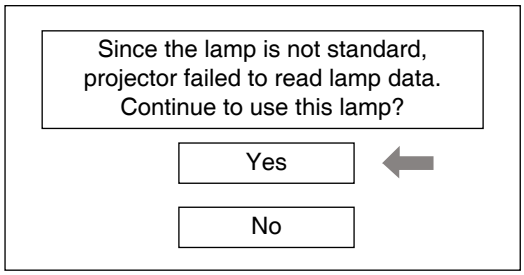

Security Function Notice

This projector provides security functions such as "Key lock", "PIN code lock" and "Logo PIN code lock". When the projector has set these security function on, you are required to enter correct PIN code to use the projector. If you do not know the correct PIN code to the projector, the projector can no longer be operated or started. In this case, you must reset those function first according to the resetting procedure described below and then check up on the projector.

Function	Description
Key lock	Locks operation of the top control or the remote control. If the Key lock is enabled with top control lock, the projector can no longer be started. Initial setting: Key lock function is disabled
PIN code lock	Prevents the projector from being operated by an unauthorized person. Initial code: “1234”
Logo PIN code lock	Prevents an unauthorized person for changing the start-up logo on the screen. Initial code: “4321”

Resetting procedure

1. Disconnect the AC power cord from the AC outlet.
2. As pressing the **SELECT** button, connect the AC power cord into an AC outlet again.
3. Keep pressing the **SELECT** button and then press the **ON/STAND-BY** button.
4. Release the **ON/STAND-BY** button first and then release the **SELECT** button.

- The PIN code lock and Logo PIN code lock will be reset as the initial PIN code at the factory and the key lock function is disabled.

Please refer to the owner's manual for further information of the security functions.

Standby mode Notice

This projector provides 2 types of standby mode, Eco standby and Network standby. According to the standby mode "Eco" or "Network", several functions are restricted as shown in the table below. To change the standby mode, use the projector's menu "Setting".

Network..... Supply the power to the network function even after turning off the projector. You can turn on/ off the projector via network, modify network environment, and receive an e-mail about projector status while the projector is powered off.

Eco..... Select “Eco” when you do not use the projector via network. The projector’s network function will stop when turning off the projector.

When "Eco" is selected, several functions will be restricted.

Restricted Function in the standby mode

Function	Eco	Network
Serial command control	✔*1	✔
Network Function	--	✔
Monitor Out	--	✔
Audio Out	--	--
Mic Out (MIC Volume)	--	✔ *2
Direct on	✔	✔

*1 Effective only power-on command "C00".
*2 MIC volume can be output when the Standby MIC Out function is set to **On**.

Mechanical Disassembly

Mechanical disassembly should be made following procedures in numerical order.
Following steps show the basic procedures, therefore unnecessary step may be ignored.
Caution:
The parts and screws should be placed exactly the same position as the original otherwise it may cause loss of performance and product safety.

Screws Expression (Type Diameter x Length) mm	
T type	M Type
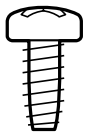	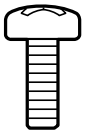

1. Filter cover (side), Cabinet Top, Front, RC Board removal

1. Pull up two Latches to take off the Filter cover(side).
2. Loosen 1 screw-A to remove the Lamp Cover.
3. Remove 6 screws-B (M3x8) and 1 screw C-(M3x8) to remove the Cabinet Top.
4. Remove 4 screws-D (M3x8) and 3 screws-E (T3x8) to remove the Cabinet Front.
5. Remove 2 screws-F(T3x8) to remove the RC board.

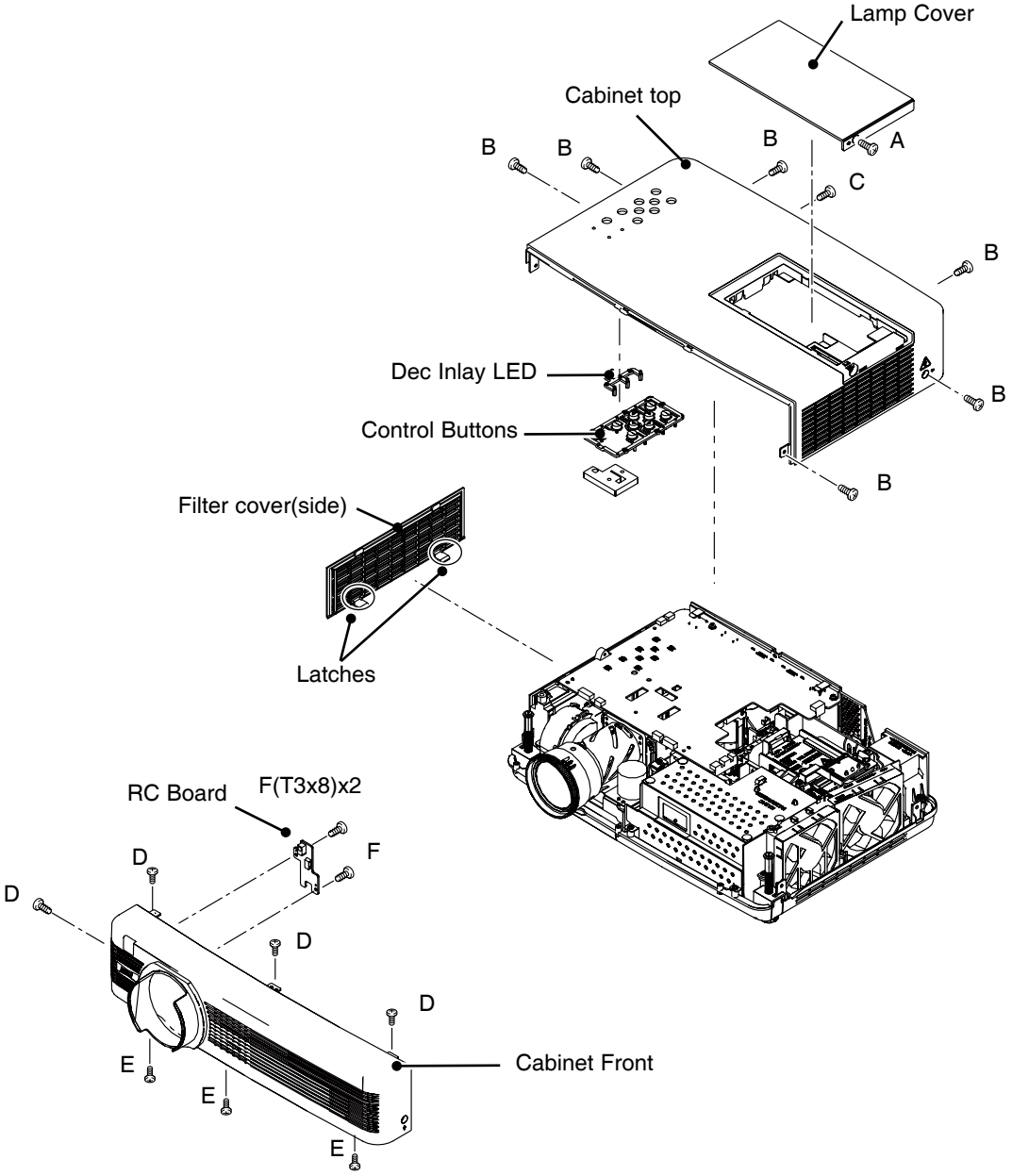

Fig.1

2. Main Board, AV Board and Fans(FN904 and FN905) removal

1. Remove 3 screws-A (T3x8) to remove the fans (FN904 and FN905).
2. Remove 3 screws-B (M2.5x6) and 2 screws-C (M3x8) to remove the assy Main Board.
3. Release the hooks to remove the AV Panel, remove 3 screws-D (T3x6) and 2 hex screws E to remove the AV Board.

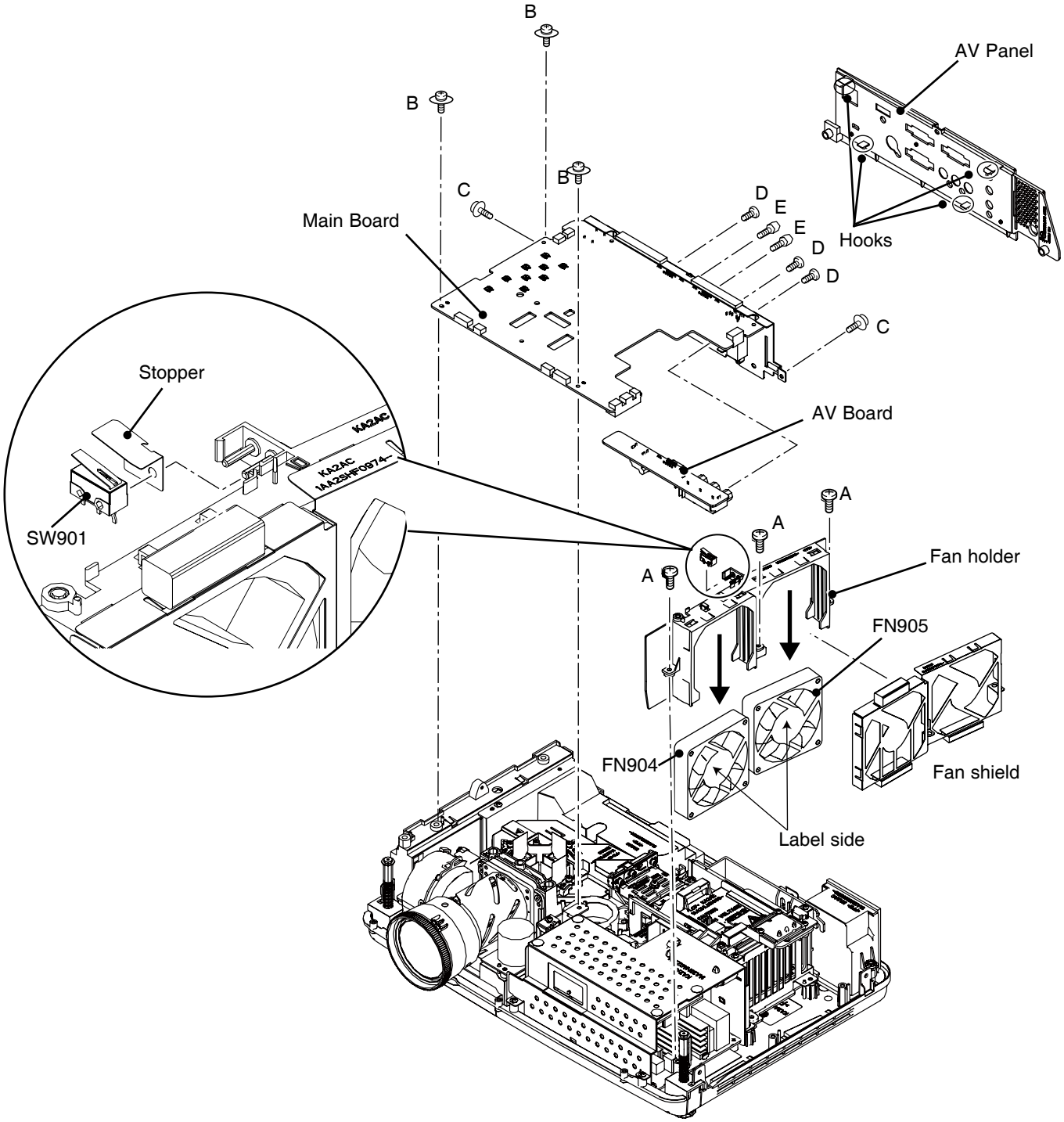

Fig.2

3. Speaker(SP901),Lamp assy(LP900), Optical Unit removal

1. Remove the 2 screws-A(T3x12) to remove the speaker holder. Remove the 2 screws-B(T3x8) to remove the speaker(SP901).
2. Loosen 3 screws-C to remove the Lamp assy (LP900).
3. Remove 4 screws-D (T3x8) to remove the Optical unit.
4. Remove 3 screws-E (T3x8) and 1 screw-F(M3x8) to remove the Lamp holder. Remove 2 screws-G(T3x6) to remove the ID Connect board.
5. Remove 2 screws-H(T3x8) to remove the Sub Power board.
6. Remove 3 screws-K (M3x8) and 1 screw-J (T3x8) to remove the Filter board.

Note:
When removing screws-G which is to fix the ID Connect board, the special screwdriver is needed as the below;
Star screwdriver Size: T10

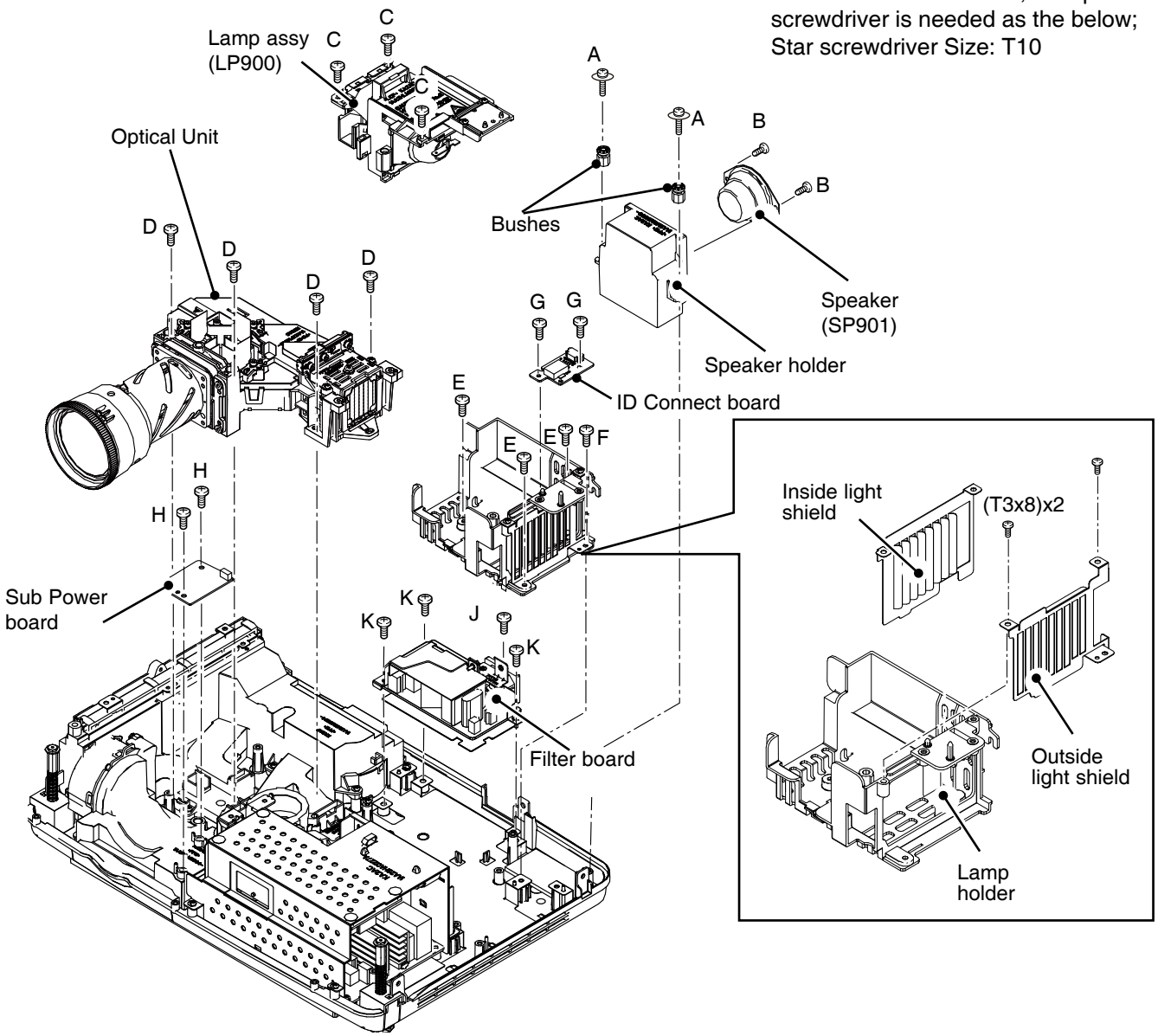

Fig.3

4. Fan (FN906) and Power Board removal

1. Remove 2 screws-A (T3x8) to remove the Cabinet front holder. Remove 1 screw-B (T3x8) to remove the Sensor holder and Thermal Switch(SW902).
2. Remove 2 screws-C(T3x8) to remove the Lamp fan duct ass'y. Remove 2 screws-D (T3x12) and 1 screw-E (T3x8) to remove the fan (FN906) and Lamp fan duct.
3. Remove 1 screw F (T3x8) and 2 screws-G (T3x8) to remove the Lamp Socket and Socket plug.
4. Remove 2 screws H (T3x8) and 1 screw-J (M3x8) to remove the Power board holder.
5. Remove 3 screws-K (T3x8) and 1 screw-L (M3x8) to remove the Power board.

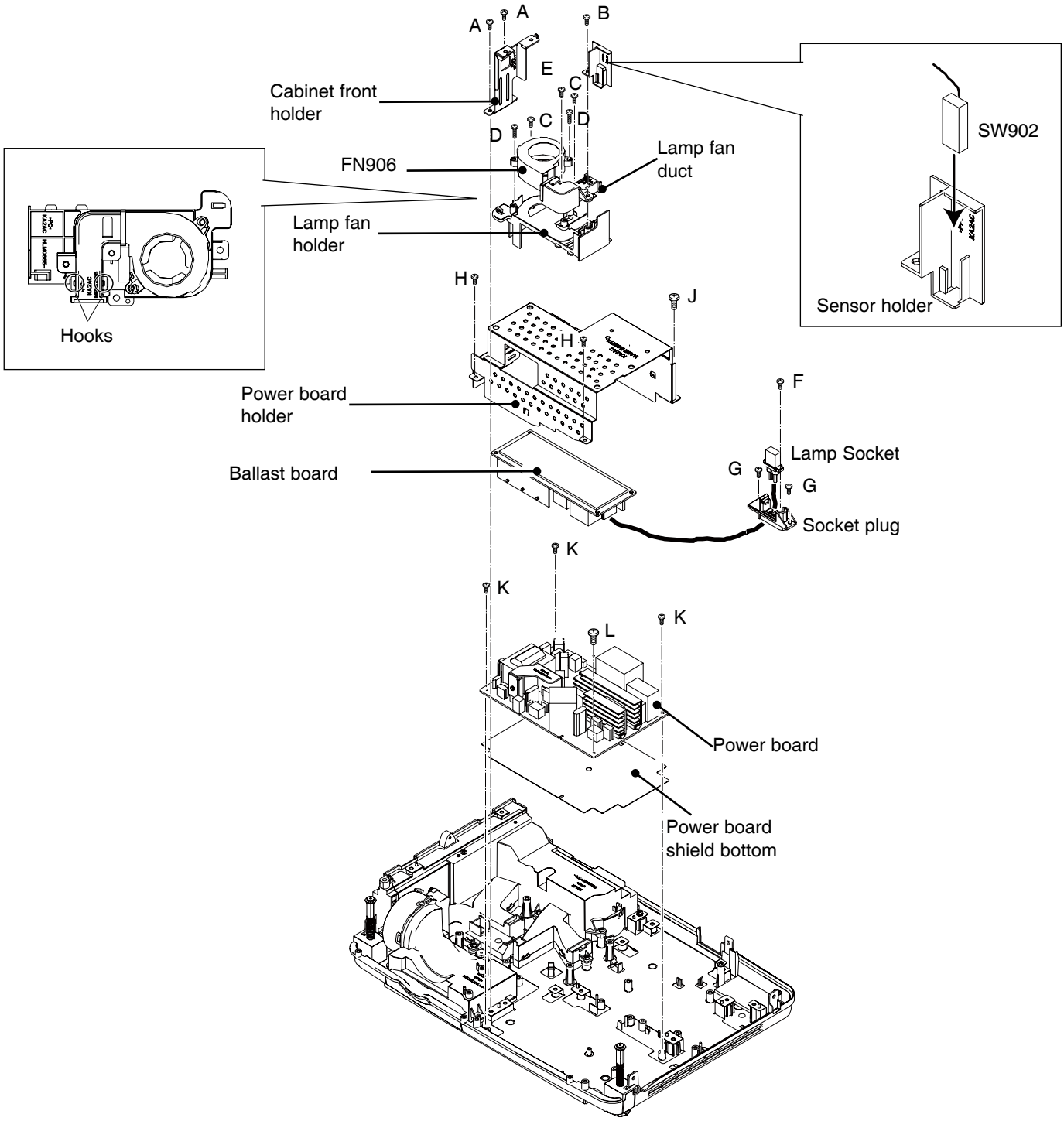

Fig.4

5. Mounting Duct, Fans(FN901, FN902, FN903) and Side Filter removal

1. Remove 5 screws-A (T3x8) and 2 screws-B (T3x12) to remove the Panel Mounting Duct top.
2. Remove 2 screws-C (T3x12) to remove fans (FN902 and FN903). Remove the Panel Mounting Duct bottom.
3. Remove 3 screws-D (T3x8) to remove the Filter Mounting Duct and remove 2 screws-E(T3x12) to remove fan (FN901).
4. Take out the Filter Box(side), and then remove 2 screws-F(T3x8) to remove the Side Filter Holder.
5. Take off the Filter Box(bottom) and Filter cover(bottom).

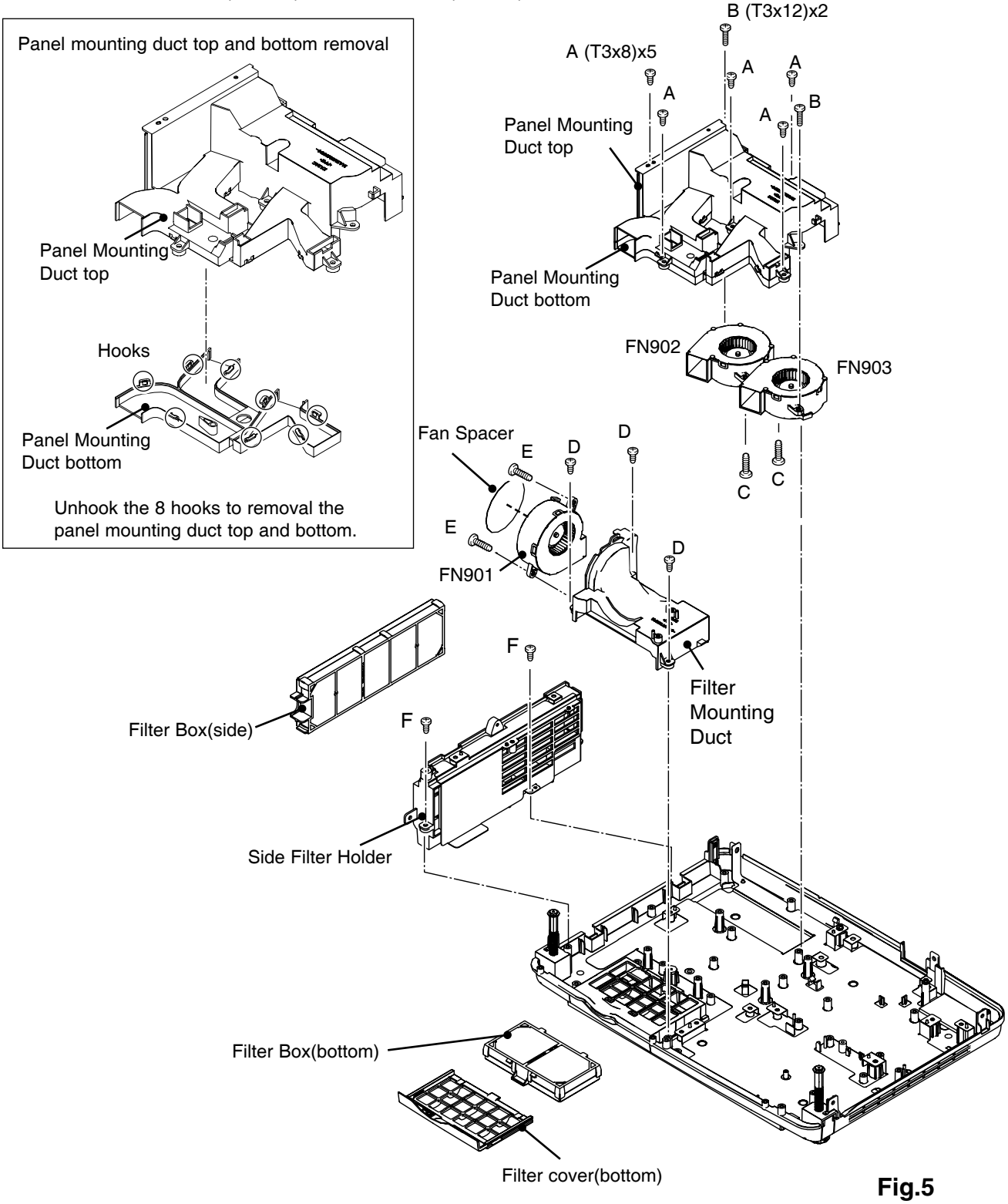

Fig.5

6. Cable Reforming

Reform cables as shown below.

Bottom view of the power box

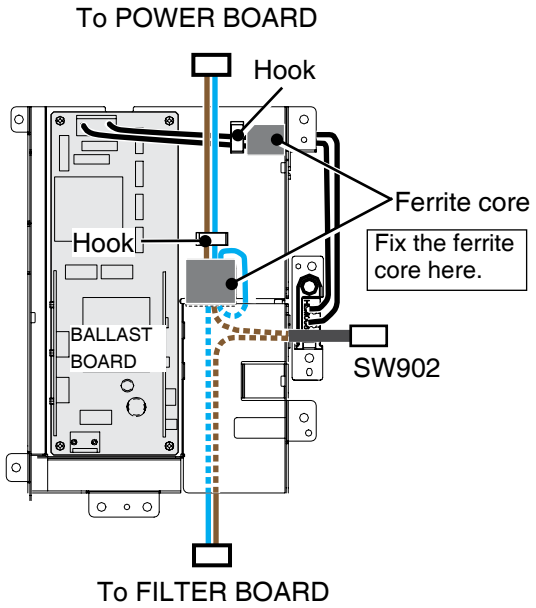

Bottom view of the panel mounting duct top

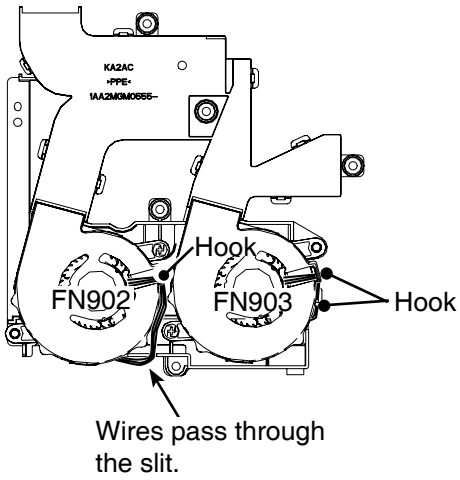

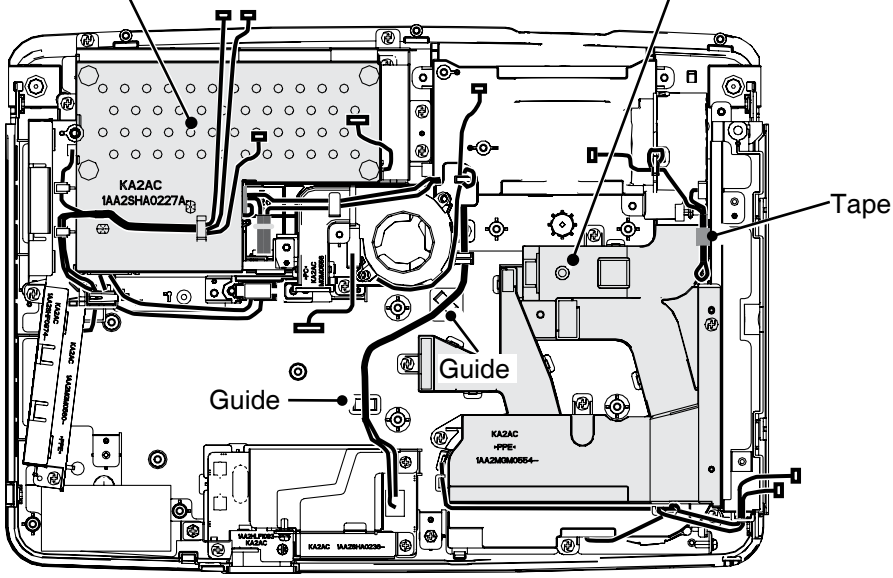

Fig.6

Optical Parts Disassembly

Before taking this procedure, remove Cabinet Top and Main Board following to the “Mechanical Disassembly”.
Disassembly requires a 2.0mm hex wrench.

1. LCD Panel/Prism assy removal

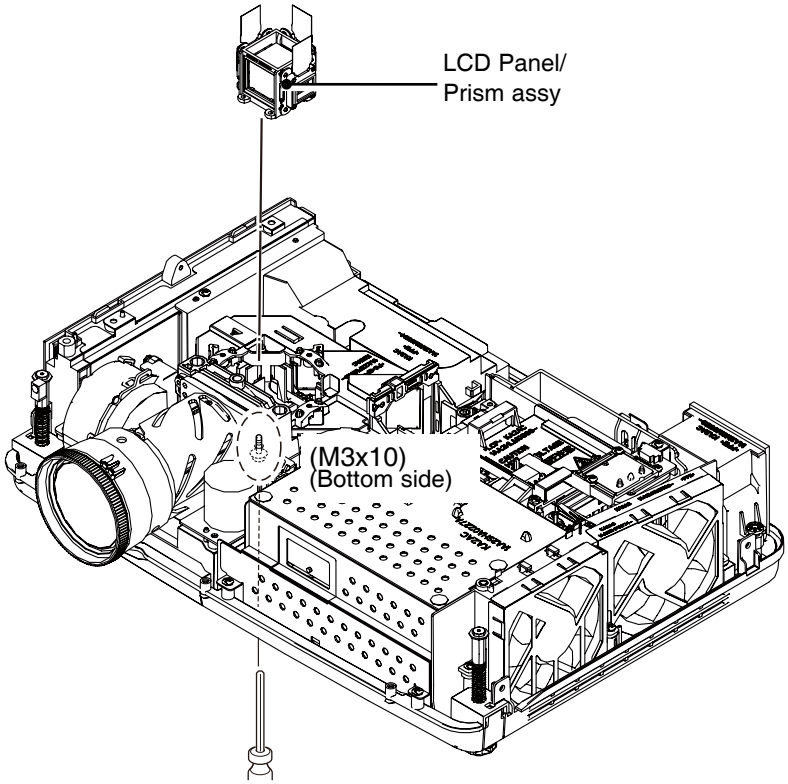

Fig.1

***Note on handling the LCD Panel/Prism Assy**
LCD Panel, Polarized glasses are very sensitive parts.
Never touch or wipe the surface. When removing the dust on the surface, use a commercial (inert gas) air spray to remove them.

LCD Panel Type Check

There are 2 types of LCD Panel/Prism Ass'y for this model. Either L-Type or R-Type LCD Panel/Prism Ass'y is used on the projector. Check which type of LCD Panel/Prism Ass'y is used with the figure below.
Since both have no compatibility, same type of the LCD Panel/Prism assy must be used for replacement. If not, it may have a serious effect on the optical characteristics.

How to check the type of LCD Panel/Prism Ass'y

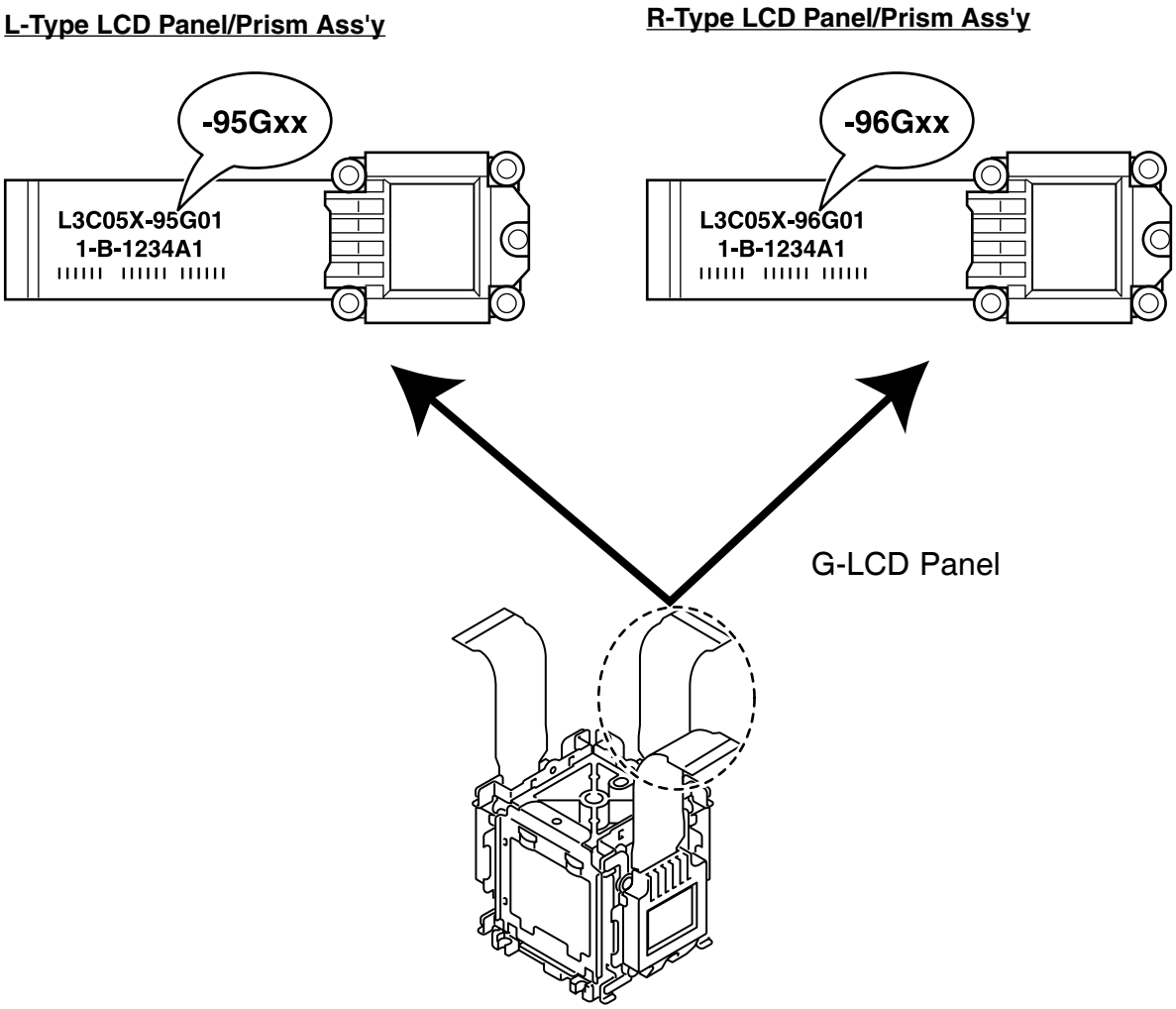

IMPORTANT NOTICE on LCD Panel/Prism Ass'y Replacement
LCD panels used for this model cannot be replaced separately. Do not disassemble the LCD Panel/Prism Ass'y. These LCD panels are installed with precision at the factory. When replacing the LCD panel, should be replaced whole of the LCD panels and prism ass'y at once.
When replacing LCD Panel/Prism ass'y, take the optical and electrical adjustments following to the chapter "Adjustment".

2. Polarized glass-in assy removal

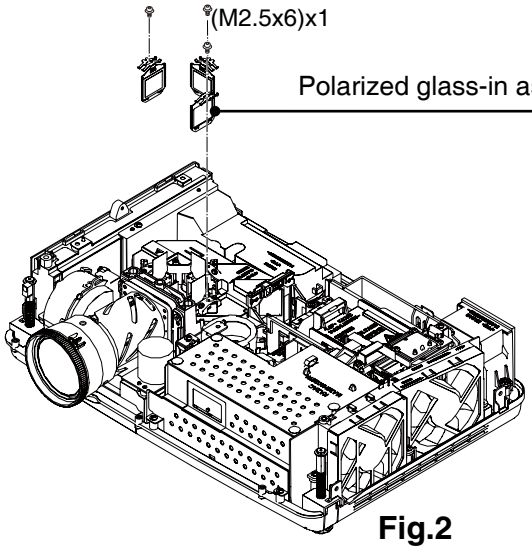

Fig.2

***Note on handling the polarized glass**
B-Polarized glass-in is very sensitive parts. Never touch or wipe the surface. Grab the mounting base when handling the polarized glass assy. When removing the dust on the surface, use a commercial (inert gas) air spray to remove them. Never use organic solvents.

Note on mounting the Polarized glass-in assy

When mounting the R-Polarized glass-in assy and B-Polarized glass-in assy, make sure that mounting position of the holder should be center.

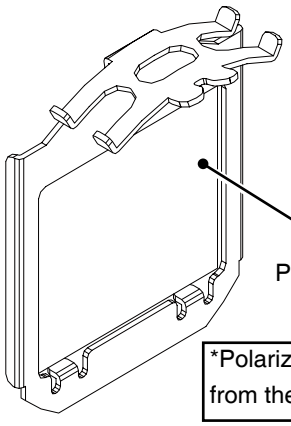

*Polarized glass is not removed from the mounting base.

3. Projection lens removal

Note: The optical unit should be removed from the cabinet bottom before removing the projection lens.

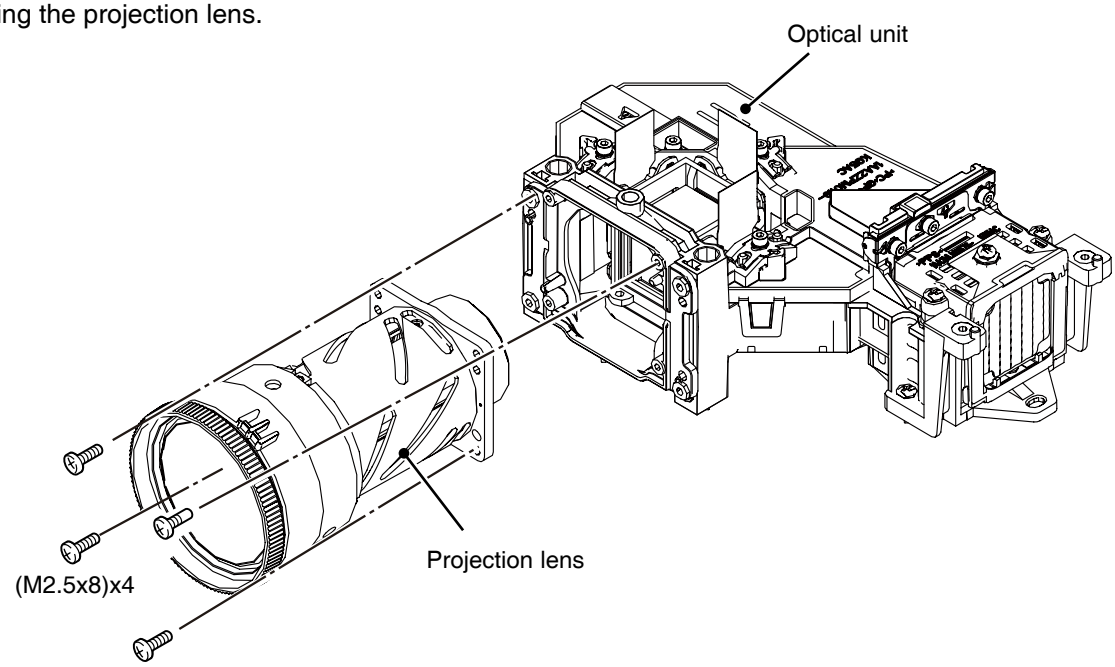

Fig.3

4. Integrator and Condenser out lens disassembly

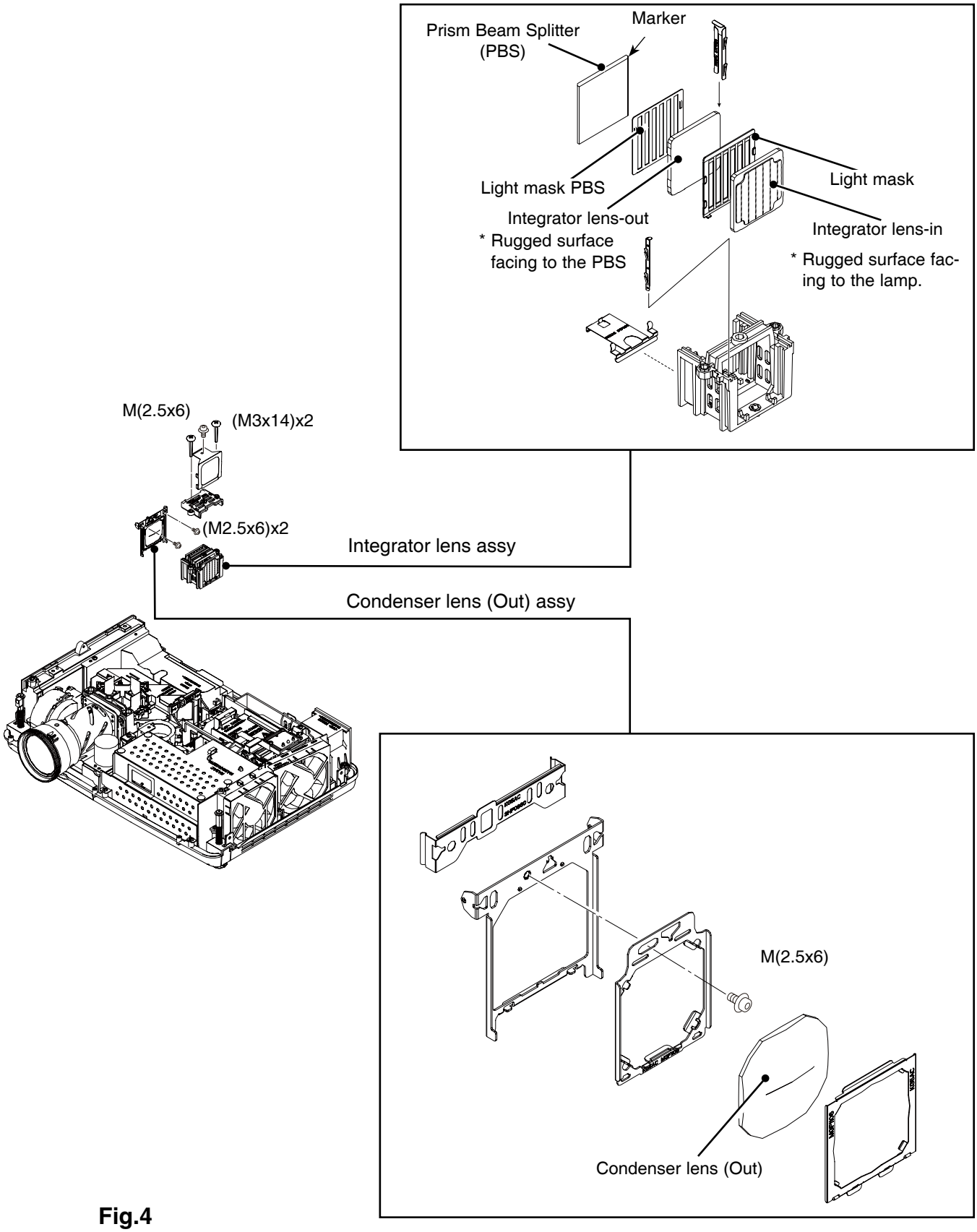

Fig.4

5. Optical unit top removal

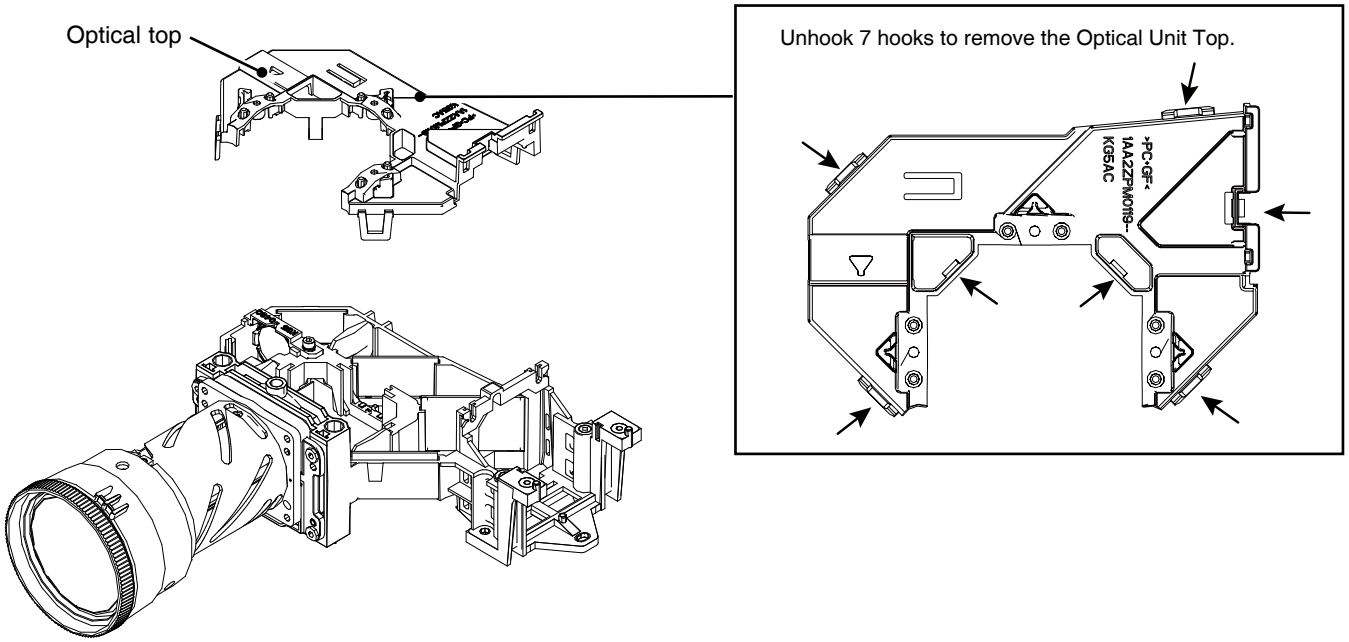

Fig.5

6. Relay lens removal

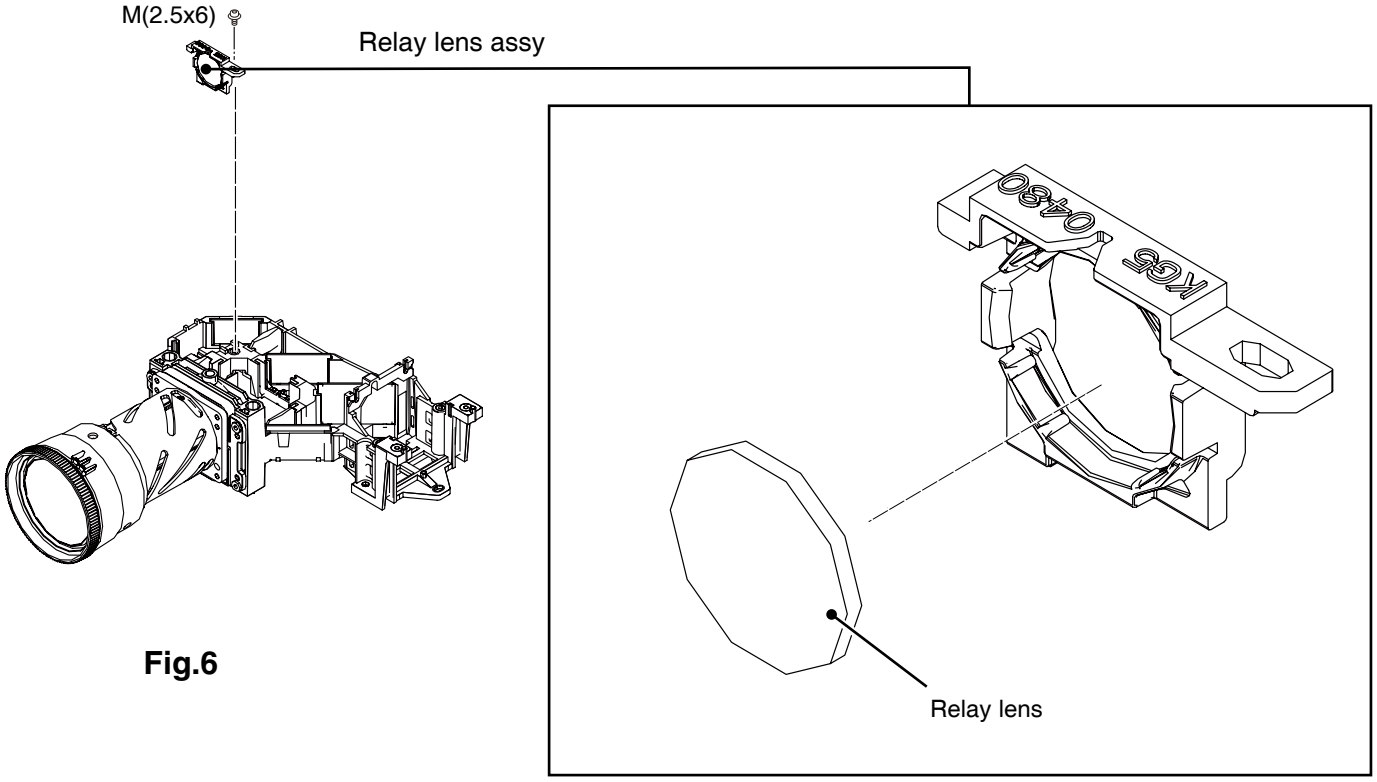

Fig.6

7. Locations and Directions

When mounting or assembling the optical parts in the optical unit, the parts must be mounted in the specified location and direction as shown in figure below.

No.	Parts Name
1	Dichroic mirror (B)
2	Dichroic mirror (G)
3	Condenser lens (G)
4	Mirror (R)
5	Relay lens (IN)
6	Mirror (B)

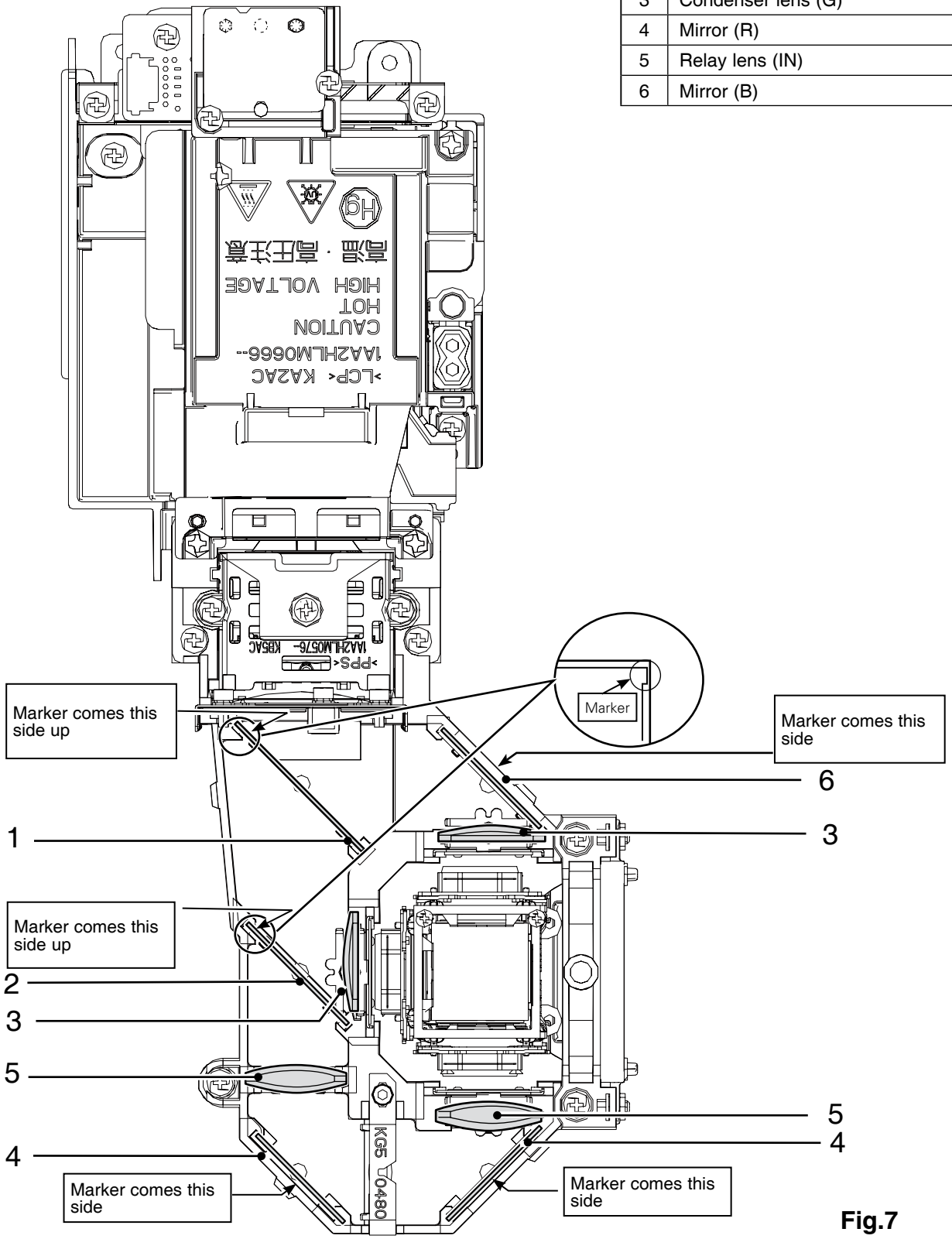

Fig.7

Adjustments

Adjustments after Parts Replacement

● : Adjustment necessary ❍ : Check necessary

		Disassembly / Replaced Parts							
		LCD/ Prism assy	Condenser Lens (OUT)	Relay Lens (OUT)	Polarized Glass			Power Board	Main Board
					R	G	B		
Optical Adjustments	Contrast Adjustment	❍				●			
	Optical center adjustment	❍	●	●					
Electrical Adjustments	Fan control adjustment							●	●
	Auto calibration adjustment [PC]								❍
	Auto calibration adjustment [Component]								❍
	Auto calibration adjustment [Video]								❍
	Common center adjustment	●							●
	Panel type check and setting								●
	Gamma correction adjustment *	●							●
	White balance adjustment	❍							❍
	Color shading correction adjustment *	❍			❍	❍	❍		❍
	Keystone offset adjustment								●

* To setup or adjust those items, the Projector Service Tool v. 4.20 software is needed. Refer to the owner's manual for this software for the further details.

Note on Main Board Replacement

Take the following setting when the main board is replaced.
- Shipment data setting (Color Shading Correction, Gamma Correction)
- Serial No. Setting

● Adjustment Ship Data Setting

This projector stores "Color Shading Correction Data" and "Gamma Correction Data" in the memory IC on the main board. Those shipping data have been setup according to the optical characteristics of the mounted LCD panels preciously in the factory. When replacing the main board, you need to read out the those setting data stored in the memory IC on the previous main board and write down them into the memory IC on the new main board. By this way, the projector enables to reproduce the picture which has properly adjusted color shading correction, gamma correction. For further details, refer to the operation manual of the software [PROJECTOR SERVICE TOOL v4.20].

● Serial No. Setting

The serial no. displayed on the on-screen menu "Information" is stored in the memory IC on the main board. After replacing the main board, if the value of "SERIAL NO." on the "Information" menu is not displayed correctly, use the serial no. setting tool to write the correct serial no. referring to the serial no. printed on the rating label. For further details, refer to the operation manual of the software "Serial No. Setting Tool v1.00". The serial no. setting tool is included in the service CD-ROM below;

PROJECTOR SERVICE TOOL CD-ROM v4.20
SERVICE CODE: 610 343 5596

Optical Adjustments

Before taking optical adjustments below, remove the Cabinet Top following to the “Mechanical Disassembly”.
Adjustments require a 2.0mm hex wrench and a slot screwdriver.
Note: Do not disconnect connectors on the main board, because the projector cannot turn on due to operate the power failure protection.

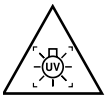

WARNING : USE UV RADIATION EYE AND SKIN PROTECTION DURING SERVICING

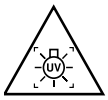

CAUTION: To prevent suffer of UV radiation, those adjustment must be completed within 25 minutes.

Contrast adjustment

[Before Adjustment]
- Input a 100% of black raster signal.

1 Loosen a screw **A (Fig.1)** on the G-polarized glass mounting base.
2 Adjust the slot **B** to obtain the darkest brightness on the screen by using a slot screwdriver.
3 Tighten the screw **A** to fix the G-polarized glass mounting base.

- This adjustment should be performed in the darkest room to improve the precision of adjustment.

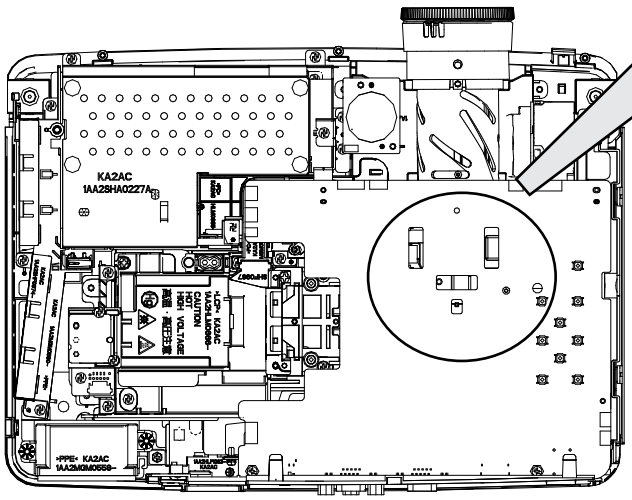

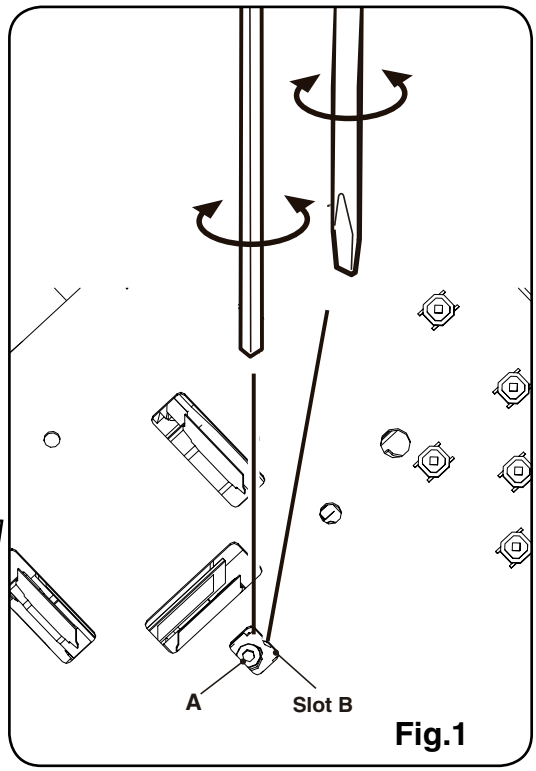

Fig.1

Optical center adjustment

Take step-1 to step-3 sequentially for the optical center adjustment.

[Before Adjustment]
- Input a 100% of white raster signal.

1 Condenser lens adjustment-1

1 Loosen 2 screws **A** on the condenser lens (OUT) base and insert a slot screwdriver into the slots **B** and turn it to disappear the color shading on the top or bottom of the screen as shown in **Fig.2**.
2 Tighten screws **A** to fix the condenser lens (OUT) unit.

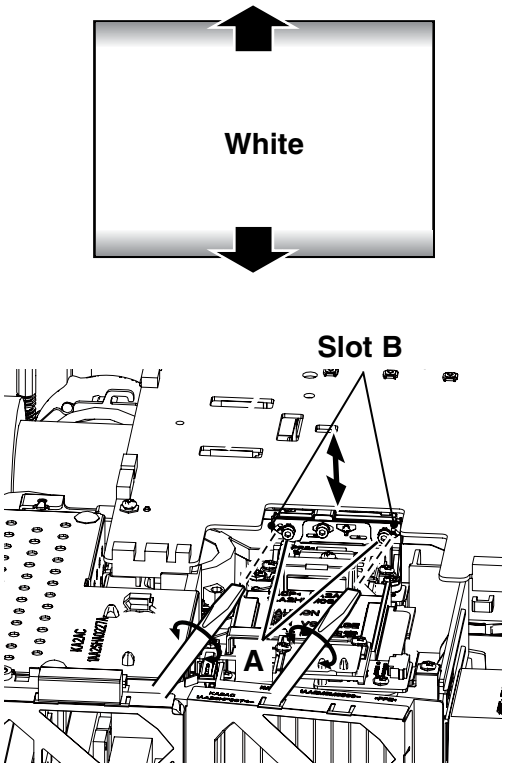

Fig.2
Moving of Slot B

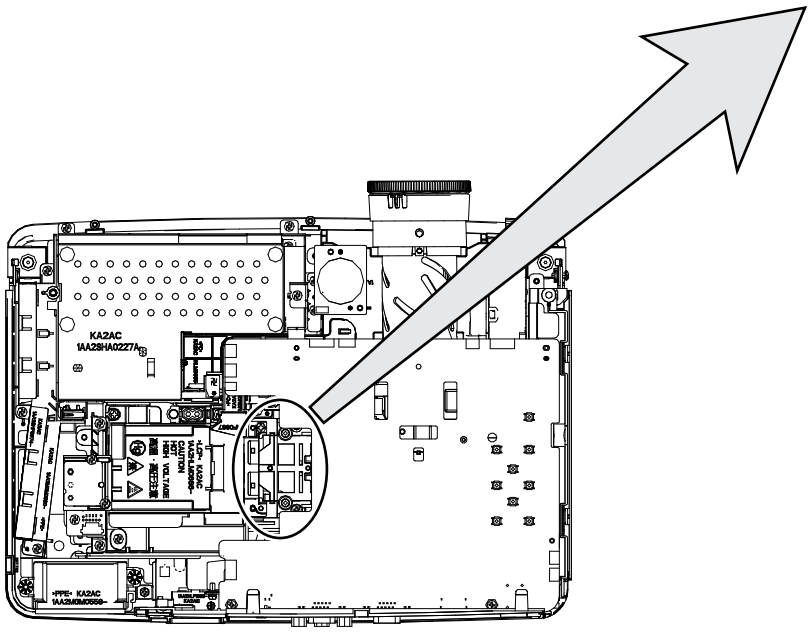

2 Relay lens adjustment

1 Loosen 1 screw **C** on the condenser lens (OUT) base and insert a slot screwdriver into the slots **D** and turn it to show the color shading on the both left and right of the screen as shown in **Fig.3-1**.

2 Loosen 1 screw **A** on the relay lens (OUT) base and insert a slot screwdriver into the slots **B** and turn it to make the same band of color shading on the left and right of the screen as shown in **Fig.3-2**.

3 Tighten the screw **A** to fix the relay lens unit.

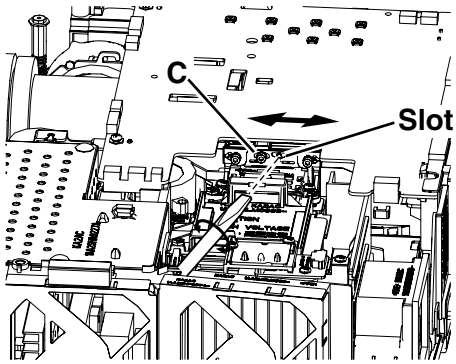

Fig.3-1

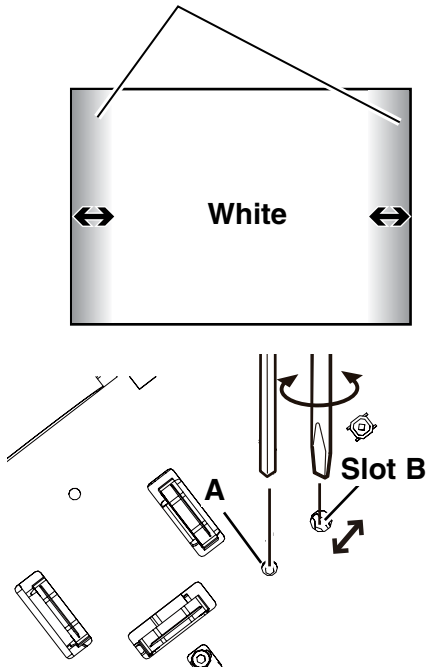

Fig.3-2
Moving of slot B

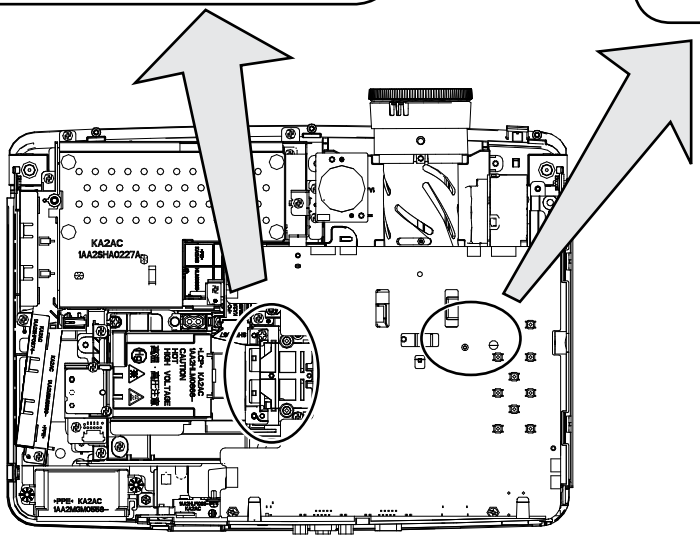

3 Condenser lens adjustment-2

1 Loosen 1 screw **C** on the condenser lens (OUT) base and insert a slot screwdriver into the slots **D** and turn it to disappear the color shading on the left and right of the screen as shown in **Fig.4**.

2 Tighten screw **C** to fix the condenser lens (OUT) unit.

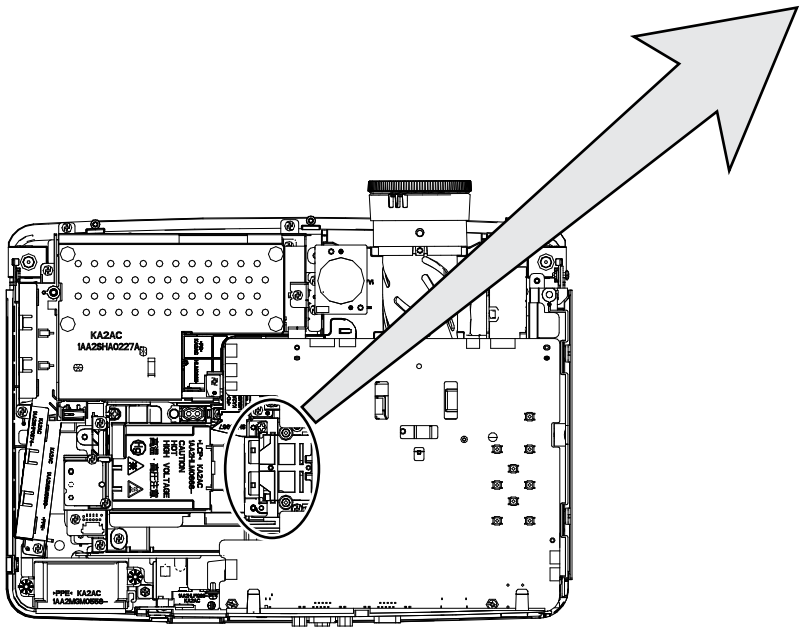

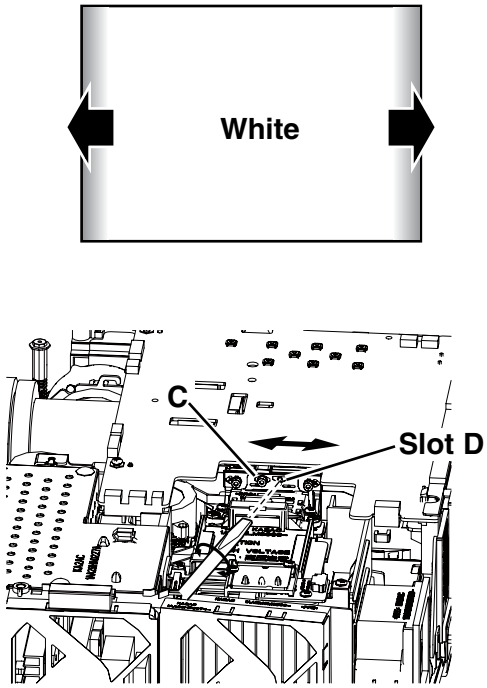

Fig.4
Moving of Slot D

Electrical Adjustments

Service Adjustment Menu Operation

To enter the service mode

To enter the “Service Mode”, press and hold the **MENU button** and **SELECT button** on the projector for more than 3 seconds or press and hold the **MENU button** on the remote control for more than 20 seconds. The service menu appears on the screen as follows.

To adjust service data

Select the adjustment group no. by pressing the **MENU button** (increase) or **SELECT button** (decrease), and select the adjustment item no. by pressing the pointer ▲ or ▼ **button**, and change the data value by pressing the ◀ or ▶ **button**. Refer to the “Service Adjustment Data Table” for further description of adjustment group no., item no. and data value.

To exit the service mode

To exit the service mode, press the **ON/STAND-BY button**.

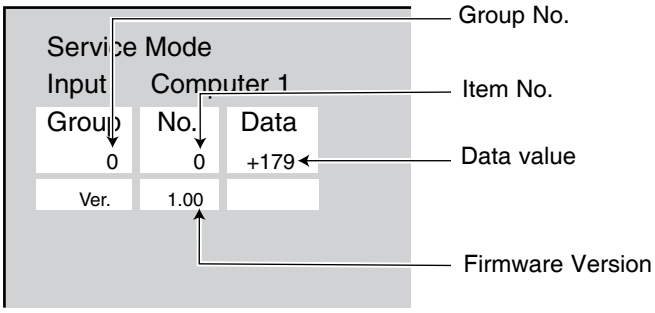

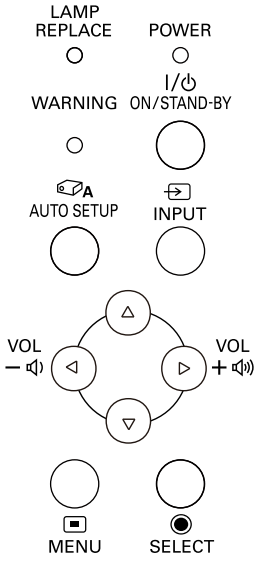

Circuit Adjustments

CAUTION: The each circuit has been made by the fine adjustment at factory. Do not attempt to adjust the following adjustments except requiring the readjustments in servicing otherwise it may cause loss of performance and product safety. Before adjustment, please turn on the projector more than ten minutes.

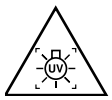

WARNING : USE UV RADIATION EYE AND SKIN PROTECTION DURING SERVICING.

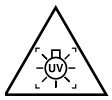

CAUTION:
To prevent suffer of UV radiation, those adjustments must be completed within 25 minutes.

[Adjustment Condition]

- Input signal

Video signal .....1.0Vp-p/75Ω terminated, 16 steps gray scale (Composite video signal)

Component Video signal.....1.0Vp-p/75Ω terminated, 8 color 100% color bar or 16 step gray scale (Component video signal) (1080i)

Computer signal.....0.7Vp-p/75Ω terminated, 16 steps gray scale (XGA)

- Image select.....Standard mode unless otherwise noted.

Note:

* Please refer to “Service Adjustment Menu Operation” for entering the service mode and adjusting the service data.

16 steps gray scale pattern

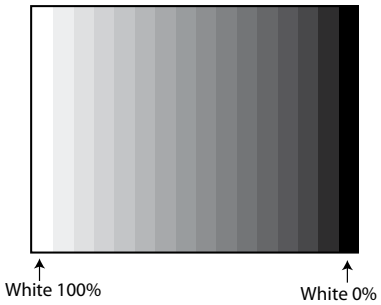

8 color 100% color bar

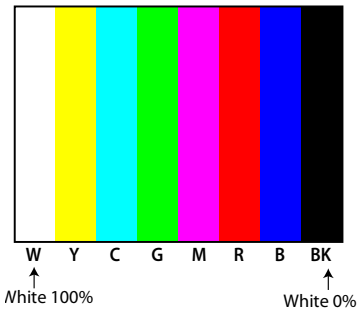

1. Fan Control adjustment

Equipment Digital voltmeter

1. Enter the service mode.
2. Adjust the voltage on each test point by changing the data values of Group - No.

Group - No.	Test Points	Adjustment value
250 - 0	TPFANA	**4.0 ±0.1Vdc**
250 - 1	TPFANA	**13.5 ±0.1Vdc**
250 - 2	TPFANB	**5.2 ±0.1Vdc**
250 - 3	TPFANB	**13.5 ±0.1Vdc**
250 - 4	TPFANC	**3.5 ±0.1Vdc**
250 - 5	TPFANC	**12.0 ±0.1Vdc**

Adjustments item no. [2] and [4] are carried out at the spare parts shipment in the factory, therefore they are not required when the main board is replaced with new one.

2. Auto Calibration adjustment [PC]

Input mode Computer 1 (Analog PC)
Input signal XGA Computer signal
Signal pattern 16-step gray scale

1. Enter the service mode.
2. Select Group "**200**", No. "**70**" and set data value to "**0**". Select Group "**260**", No. "**0**" and set data value to "**1**".
   The projector begins auto-calibration and then "OK" will appear on the screen.
3. Select Group "**200**", No. "**70**" and set data value to "**1**". Select Group "**260**", No. "**0**" and set data value to "**1**".
   The projector begins auto-calibration and then "OK" will appear on the screen.
4. Select Group "**200**", No. "**70**" and set data value to "**0**" .

Below adjustments are performed when the above auto calibration is failed.

Gain adjustment [PC]

Equipment Oscilloscope

1. Enter the service mode.
2. Select Group "**200**", No. "**70**" and set the data value to "**1**".
3. Adjust the amplitude "**a**" of waveform at each test point to be minimum by changing the data value of Group - No.

Group - No.	Test Point
0 - 3	**TP35R**
0 - 4	**TP35G**
0 - 5	**TP35B**

4. Select Group "**200**", No. "**70**" and set data value to "**0**".
5. Adjust the amplitude "**a**" of waveform at each test point to be minimum by changing the data value of Group - No.

Group - No.	Test Point
10 - 3	**TP35R**
10 - 4	**TP35G**
10 - 5	**TP35B**

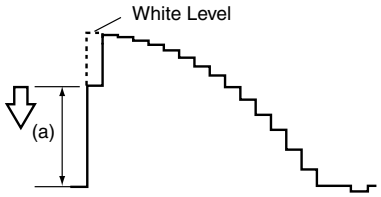

3. Auto Calibration adjustment [Component]

Input mode Computer 1 (Component)
Input signal 1080i component signal
Signal pattern 8 color bar

1. Enter the service mode
2. Select Group "**200**", No. "**71**" and set data value to "**0**". Select Group "**260**", No. "**0**" and set data value to "**1**".
   The projector begins auto-calibration and then "**OK**" will appear on the screen.
3. Select Group "**200**", No. "**71**" and set data value to "**1**". Select Group "**260**", No. "**0**" and set data value to "**1**".
   The projector begins auto-calibration and then "**OK**" will appear on the screen.

Below adjustments are performed when the above auto calibration is failed.

Gain adjustment [Component]

Input mode Computer 1 (Component)
Input signal 1080i component signal
Signal pattern 16-step gray scale
Equipment Oscilloscope

1. Enter the service mode.
2. Select Group "**200**", No. "**71**" and set the data value to "**1**".
3. Adjust the amplitude "**a**" of waveform at each test point to be minimum by changing the data value of Group - No.

Group - No.	Test Point
0 - 3	**TP35R**
0 - 4	**TP35G**
0 - 5	**TP35B**

4. Select Group "**200**", No. "**71**" and set data value to "**0**".
5. Adjust the amplitude "**a**" of waveform at each test point to be minimum by changing the data value of Group - No.

Group - No.	Test Point
10 - 3	**TP35R**
10 - 4	**TP35G**
10 - 5	**TP35B**

6. Select Group "**200**", No. "**71**" and set the date value to "**1**".

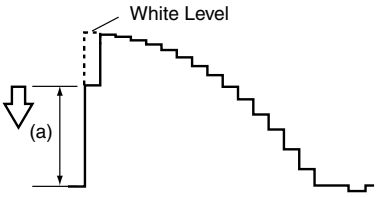

4. Auto Calibration adjustment [Video]

Input mode Video
Input signal Composite video signal
Signal pattern 16-step gray scale

1. Enter the service mode.
2. To start the auto-calibration for Component adjustment, select Group "**260**", No. "**0**" and then change data value from "**0**" to "**1**". After the auto-calibration completed, "**OK**" will appear on the screen.

Below adjustment is performed when the above auto calibration is failed.

Gain adjustment [Video]

Equipment Oscilloscope

1. Enter the service mode.
2. Adjust the amplitude "**a**" of waveform at the test point to be minimum by changing the data value of Group - No.

Group - No.	Test Point
20 - 0	**TP35G**

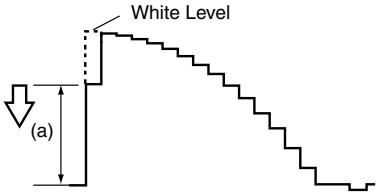

5. Common Center adjustment

Input mode Computer 1 (Analog PC)
Input signal XGA computer signal
Signal patterns 50% R, G, B whole signals

1. Enter the service mode
2. Select Group "**104**", No. "**76**" and change the data value to "**2**" to reduce the panel frequency.
3. Change data value to obtain the minimum flicker for each color on the screen.

Group - No.	Adjustment
105 - 9	**for red flicker**
105 - 10	**for green flicker**
105 - 11	**for blue flicker**

4. Select Group "**104**", No. "**76**" and change the data value to "**0**" to reset the panel frequency.

6. Panel Type Check and Setting

* Before setting, you need to check which type of LCD panel is placed on the projector according to the item "LCD Panel/Prism Ass'y removal" in the chapter "Optical Parts Disassembly".

1. Enter the service mode.
2. Panel Type Check
   Select Group "**290**", No. "**0**". Check the data value as follows;
   Data value: 0 For L-Type of LCD Panel
   Data value: 20 For R-Type of LCD panel
   If the mounted LCD panel type and set Panel mode are differ, take the step below.

3. Panel Type Mode Setting
   Select Group "**290**", No. "**1**" and change data value from 10 to 0 or 20 depending on your LCD Panel type. When the data value reaches 0 or 20, it returns to 10 quickly. The gamma-characteristics changes according to your selection.

7. Gamma shipment adjustment

Software PROJECTOR SERVICE TOOL v4.20

Use the software to obtain the proper gray scale of the screen. See the further information of the software instruction manual.

8. White balance adjustment

Input mode	Computer 1 (Analog PC) video
Input signal	XGA computer signal Composite video signal
Signal patterns	16-step gray scale

1. Enter the service mode,
2. Input PC analog signal. Select Group "**104**" No. "**217**" (Red) or "**223**" (Blue) and change data values respectively to make a proper white balance.
   Input composite video signal. Select Group "**104**" No. "**217**" (Red) or "**223**" (Blue) and change data values respectively to make a proper white balance.
3. Confirm that the same white balance is obtained in the video and computer mode.

9. Color Shading Correction adjustment

Software PROJECTOR SERVICE TOOL v4.20
Signal pattern 6%, 13%, 30%, 60% whole gray

Use the software to correct the color shading of the screen. See the further information of the software instruction manual.
The color shading correction adjustment for this model should be performed with the whole-gray patterns specified as above.

<u>Corresponding to the pull-down menu of the gray level selector on the software.</u>

Level 0 : 6%
Level 384 : 13%
Level 640 : 30%
Level 1032 : 60%

<u>Relation of level (%) indication and signal pattern</u>

0% : Black
100% : White

10. Keystone Offset adjustment

Input signal no signal

1. Put the projector on a horizontal place with the adjustable feet being minimum range and then enter the service mode.
2. Select Group "**75**", No. "**3**" and set data value from "**0**" to "**5**".
3. By pressing the **OK** button, the Keystone Offset adjustment will start.
4. When it has completed, the "**OK**" message will appear on the screen.
5. By pressing any button on the projector or the remote control, the "**OK**" message will disappear. (Data value of Group "**75**", No. "**3**" will be back to "**0**" for initial value.)

Test Points and Locations

MAIN BOARD

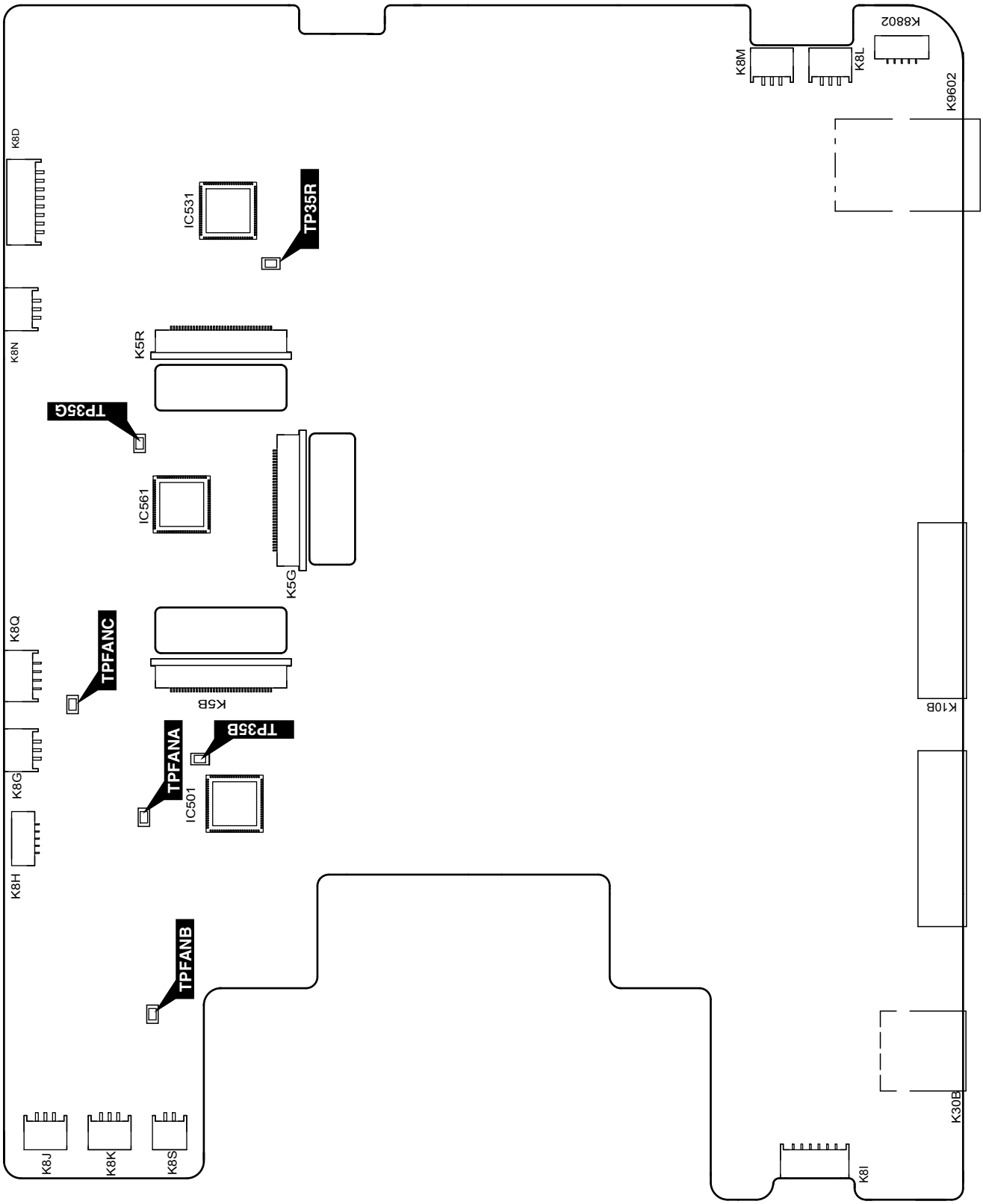

Service Adjustment Data

These initial values are the reference data written from the CPU ROM to memory IC when replaced new memory IC. The adjustment items indicated with "*" are required to readjust following to the "Electrical adjustments". Other items should be used with the initial data value.

Group/ Item	Item Name	Function	Initial	Range	Note
Group 0	**AD Converter (PW392)**				
3	ADC G-GAIN	YCbCr 480i (575i) / YCbCr 480p (575p) / YCbCr 720p (720p50) / YCbCr 1080i (1035i, 1080i50) / SCART	265/200/200/200/200/265	0 - 1023	* G-Gain Adjustment
4	ADC R-GAIN	YCbCr 480i (575i) / YCbCr 480p (575p) / YCbCr 720p (720p50) / YCbCr 1080i (1035i, 1080i50) / SCART	265/205/205/205/205/265	0 - 1023	* R-Gain Adjustment
5	ADC B-GAIN	YCbCr 480i (575i) / YCbCr 480p (575p) / YCbCr 720p (720p50) / YCbCr 1080i (1035i, 1080i50) / SCART	255/205/205/205/205/255	0 - 1023	* B-Gain Adjustment
10	SOGTH	RGB / COMPONENT / SCART	2/4/4	0 - 15	
11	SOGHYSDIS	RGB / COMPONENT / SCART	1/1/0	0 - 1	
12	HS1TH	H Sync1 Threshold RGB / COMPONENT / SCART	*/4/4	0 - 15	
13	HS0TH	H Sync0 Threshold RGB / COMPONENT / SCART	*/4/4	0 - 15	
Group 10	**Sync Processor**				
3	ADC G-GAIN	PC/YCbCr 480i (575i) / YCbCr 480p (575p) / YCbCr 720p (720p50) / YCbCr 1080i (1035i, 1080i50)	235/120/120/120/120	0 - 1023	
4	ADC R-GAIN	PC/YCbCr 480i (575i) / YCbCr 480p (575p) / YCbCr 720p (720p50) / YCbCr 1080i (1035i, 1080i50)	235/140/140/140/140	0 - 1023	
5	ADC B-GAIN	PC/YCbCr 480i (575i) / YCbCr 480p (575p) / YCbCr 720p (720p50) / YCbCr 1080i (1035i, 1080i50)	235/140/140/140/140	0-1023	
Group 20	**Video Decoder** *R : Read Only Value				
0	Y Level	Composite / S-Video - Y Level (ADC RGB Gain)	175/175/185/185	0 - 1023	Composite / S-Video * Gain Adjustment [Video]
1	C Level	Composite / S-Video - C Level (ADC Saturation)	405/405/440/440	0 - 1023	Composite / S-Video
10	XCXL Parameter	XCXL Level	2	0 - 4	
11	Sync Amp Low	Minimum sync amplitude threshold for HLOCK 1 to 0 transition	1792	0 - 9999	
12	Sync Amp High	Minimum sync amplitude threshold for HLOCK 0 to 1 transition	4096	0 - 9999	
13	Luma Setup Enable	7.5IRE Mode	0	0-1	
14	Anti-Alias Filter	Anti-Alias Filter	4	0-7	
15	Anti-Alias Downsample	Anti-Alias Downsample	0	0-3	
16	Anti-Alias High Frequency	Anti-Alias High Frequency	3	0-3	
20	Comb 3D Cross-Luma Top/ Bottom Amplitude	for PAL/SECAM only	3	0-3	
Group 35	**DVI Equalizer(DS16E5110)**				
0	CH0 Boost Data	DVI Equalizer CHO Boost Value	-	0 - 7	
1	CH1 Boost Data	DVI Equalizer CH1 Boost Value	-	0 - 7	
2	CH2 Boost Data	DVI Equalizer CH2 Boost Value	-	0 - 7	
Group 40	**General**				
0	IP Mode	Sets for IP Off	1	0 - 1	0: IP Block not used 1: IP OFF used with IP Block
1	3:2 PullDown Mode	bit0 : Global Motion bit1 : Video Motion	1	1 - 3	bit0 : Global Motion bit1 : Video Motion
2	Detect Film Mode Enable	0 : 2:3pull down & 2:2pull down 1 : 2:3pull down 2 : 2:2pull down	0	0 - 2	0 : 2:3pull down & 2:2pull down 1 : 2:3pull down 2 : 2:2pull down

Group/ Item		Item Name	Function	Initial	Range	Note
	3	NR Enable for Digital YUV	0: Detect Y or UV, Noise Reduction 1: Detect Y, YUV for Noise Reduction	1	0 - 1	
	4	NR Enable for Digital YUV	Analog YUV : PC/Video/S-Video/ Component Digital YUV : HDMI <NSYUVEN>	0	0 - 1	
Group 41		**Deinterlacer setting** Effective only for Progressive Mode 1, Film mode.				
	0	Motion Adaptive Weight Value	<KDEINT>	30/30/30	0 - 255	
	1	Angle Interpolation Level	0 : Conservative <====> 4 : Aggressive	4/4/4	0 - 5	
	2	CUE Low Pass Filter Enable	<CUELPFEN>	0/0/0	0 -255	
Group 42		**Deinterlacer setting** Effective only for Progressive Mode2 mode.				
	0	Motion Adaptive Weight Value	<KDEINT>	0/0/0	0 - 255	
	1	Angle Interpolation Level	0 : Conservative <====> 4 : Aggressive	2/2/2	0 - 5	
	2	CUE Low Pass Filter Enable	<CUELPFEN>	0/0/0	0 - 255	
Group 47		**Noise Reduction (Time)** Effective only for N.R L1				
	0	Noise Pixel Range	<NSRANGEY> / <NSRANGEUV>	1	0 - 2	
	1	Noise Region 0	<NSREGIONY0> / <NSREGIONUV0>	12	0 - 1023	
	2	Noise Region 1	<NSREGIONY1> / <NSREGIONUV1>	24	0 - 1023	
	3	Noise Region 2	<NSREGIONY2> / <NSREGIONUV2>	40	0 - 1023	
	4	Noise Gain Level	<NSFILTERY**> / <NSFILTERUV**>	100	0 - 255	
Group 49		**Noise Reduction (Time)** Effective only for N.R L2				
	0	Noise Pixel Range	<NSRANGEY> / <NSRANGEUV>	1	0 - 2	
	1	Noise Region 0	<NSREGIONY0> / <NSREGIONUV0>	12	0 - 1023	
	2	Noise Region 1	<NSREGIONY1> / <NSREGIONUV1>	24	0 - 1023	
	3	Noise Region 2	<NSREGIONY2> / <NSREGIONUV2>	40	0 - 1023	
	4	Noise Gain Level	<NSFILTERY**> / <NSFILTERUV**>	100	0 - 255	
Group 50		**2:2pull down setting**				
	0	22Film Mode Sensitivity	Film Detection Sensitivity <FILMSTVT22>	4	1 - 5	
	1	22Film Mode Threshold Low	<FILMTHRD22A>	80	0 - 1023	
	2	22Film Mode Threshold High	<FILMTHRD22B>	120	0 - 1023	
	3	Video Motion Window Start X	<VOFSTARX>	10	0 - 255	
	4	Video Motion Window Start X	<VOFSTARX>	10	0 - 255	
	5	Video Motion Window Start Y	<VOFSTARY>	10	0 - 255	
	6	Video Motion Window Start Y	<VOFSTARY>	10	0 - 255	
Group 51		**2:3pull down setting**				
	0	Global Motion Sensitivity	Film Detection Sensitivity <FILMSTVT23>	4	1 - 5	
	1	Video Motion Sensitivity	Film Detection Sensitivity <VOFSTVT>	4	1 - 5	
	2	Video Motion Threshold Low	<VOFTHRDA>	120	0 - 1023	
	3	Video Motion Threshold High	<VOFTHRDB>	180	0 - 1023	
	4	Global Motion Threshold	<GMDTHRD>	100	0 - 1023	
	5	23Film Mode Threshold	<FILMTHRD23>	10	0 - 1023	
	6	Global Motion Window Start X	<GMDSTARX>	10	0 - 255	Range of detective for Film mode
	7	Global Motion Window Stop X	<GMDSTOPX>	10	0 - 255	Range of detective for Film mode
	8	Global Motion Window Start Y	<GMDSTARY>	10	0 - 255	Range of detective for Film mode
	9	Global Motion Window Stop Y	<GMDSTOPY>	10	0 - 255	Range of detective for Film mode

Group/ Item	Item Name	Function	Initial	Range	Note
Group 55	**LTI /CTI**				
0	Video Enhancement Enable	VEHEN	1	0 - 1	
1	DLTI Gain	DLTIGAIN	3	0 - 15	
2	DLTI Frequency	DLTIFREQ	2	0 - 3	
3	Bypass Anti-Alias Filter	DTIBYPASSAAL	0	0 - 1	
4	Lower DCTI Frequency	LOWERDCTIFREQ	1	0 - 1	
5	DCTI Gain	DCTIGAIN	4	0 - 15	
6	DCTI Frequency	DCTIFREQ	0	0 - 3	
7	Color Shift Limit	COLORSHIFTLMT	3	0 - 3	
Group 60	**Image**				
0	Center Contrast		512/512/512/492/492/534 /534/492/492/534/492	0 - 1023	Composite / S-Video / Component / Digital /D-RGB-Video /AnalogRGB / RGB-Video / HDCP-PC /HDCP-AV /SCART / PJ-Net Setting Value= (MENU Value - MENU Center Value) x Alpha / 10 + Center For models without FPGA: Sharpness setting Value= Center-(Menu Value-MENU Center Value)xAlpha/10 [Setting Value to PW] Contrast [Max] 1023 [Min] 0 Brightness [Max] 1023 [Min] 0 Color [Max] 1023 [Min] 0 Tint [Max] 180 [Min] 0 Sharpness [Max] 57 [Min] 0
1	Center Brightness		512/512/512/512/512/496 496/512/512/496/512	0 - 1023	
2	Center Color		560/584/502/512/560/512 /512/512/560/560/512	0 - 1023	
3	Center Tint		90/90/90/90/90/90/ 90/90/90/90/90	0-180	
4	Fixed Sharpness (Up Scaling)		8/8/8/8/8/8/ 8/8/8/8/8	0 - 37	
5	Fixed Sharpness (Down Scaling)		8/8/8/8/8/8/ 8/8/8/8/8	0 - 37	
6	Center Sharpness(Models without FPGA)		8/8/10/16/10/16/ 10/16/10/16/16	0 - 37	
7	Center WB Red		512/512/512/512/512/512 /512/512/512/512/512	0 - 1023	
8	Center WB Green		512/512/512/512/512/512 /512/512/512/512/512	0 - 1023	
9	Center WB Blue		512/512/512/512/512/512 /512/512/512/512/512	0 - 1023	
10	Center BB Red		512/512/512/512/512/512 /512/512/512/512/512	0 - 1023	
11	Center BB Green		512/512/512/512/512/512 /512/512/512/512/512	0 - 1023	
12	Center BB Blue		512/512/512/512/512/512 /512/512/512/512/512	0 - 1023	
13	Alpha Contrast		60/60/60/60/60/60/ 60/60/60/60/60	0-1000	
14	Alpha Brightness		90/90/90/90/90/90/ 90/90/90/90/90	0-1000	
15	Alpha Color		140/140/140/140/140/140 /140/140/140/140/140	0-1000	
16	Alpha Tint		10/10/10/10/10/10/ 10/10/10/10/10	0-1000	
17	Alpha Sharpness		10/10/10/10/10/10/ 10/10/10/10/10	0-1000	
18	Alpha WB Red		40/40/40/40/40/40/ 40/40/40/40/40	0- 1000	
19	Alpha WB Green		40/40/40/40/40/40/ 40/40/40/40/40	0- 1000	
20	Alpha WB Blue		40/40/40/40/40/40/ 40/40/40/40/40	0-1000	
21	Alpha BB Red		20/20/20/20/20/20/ 20/20/20/20/20	0-1000	
22	Alpha BB Green		20/20/20/20/20/20/ 20/20/20/20/20	0-1000	
23	Alpha BB Blue		20/20/20/20/20/20/ 20/20/20/20/20	0-1000	
Group 75	**Auto Keystone Setup Value**				
0	OFFSET		0	-1056 - 1056	
1	OFFSET SWITCH		0	0 - 1	
2	DEBUG MODE		0	0 - 1	
3	SERVICE CALIBRATION		0	0 - 10	
4	LOCK COUNT		5	1 - 255	
5	DELT VERT RESULT		64	1 - 255	
6	ANGLE 1 COUNT		1	1 - 10	
7	ANGLE 2 COUNT		5	1 - 10	
8	BLIND SECTOR 1		160	0 - 1024	
9	BLIND SECTOR 2		32	0 - 1024	
10	BLIND SECTOR BIAS		61	0 - 1024	
Group 104	**Panel (EP7111) Services**				
0	FRP_SET		84	0-4095	
1	DXOut_R		262	0-1023	
2	DXOut_G		262	0-1023	
3	DXOut_B		262	0-1023	
4	H_Change_Pos		31	0-256	

Group/ Item	Item Name	Function	Initial	Range	Note
5	SH_Pos		273	0-4095	
6	SH_Pos_R		1	0-12	
7	SH_Pos_G		1	1-12	
8	SH_Pos_B		1	0-12	
9	NGR_Pos		44	0-127	
10	NGR_Width		51	0-255	
11	FRP_Pos		27	0-3	
12	SWAP_InOut		1296	0-2047	
13	OSD_Pos		2	0-3	
14	OSD_Ptn		0	0-9	
15	GammaCtrl		3	0-1023	
16	GammaCtrl_Ena		1	0-1	1: Enable, 0: Disable
17	GammaCtrl_PreEnable		0	0-1	1: Enable, 0: Disable
18	REF_GatePos		21	0-1023	
19	REF_GateDur		144	0-1023	
20	BasePos_R		4	0-11	
21	BasePos_G		4	0-11	
22	BasePos_B		4	0-11	
23	RGB_sIDEmODE		0	0-7	
24	LineCont		0	0-4095	
25	GhostPos_R		4	0-23	
26	GhostPos_G		4	0-23	
27	GhostPos_B		4	0-23	
28	GHOSTCoef_R_C		0	0-2047	MIN<-->MAX cyclation
29	GHOSTCoef_R_S		128	0-255	
30	GHOSTCoef_R_E		128	0-255	
31	GHSTCoef_G_C		0	0-2047	MIN<-->MAX cyclation
32	GHSTCoef_G_S		128	0-255	
33	GHSTCoef_G_E		128	0-255	
34	GHSTCoef_B_C		0	0-2047	MIN<-->MAX cyclation
35	GHSTCoef_B_S		128	0-255	
36	GHSTCoef_B_E		128	0-255	
37	GHSTCoef_1R		0	0-2047	MIN<-->MAX cyclation
38	GHSTCoef_1G		0	0-2047	MIN<-->MAX cyclation
39	GHSTCoef_1B		0	0-2047	MIN<-->MAX cyclation
40	GHSTCoef_2R		0	0-2047	MIN<-->MAX cyclation
41	GHSTCoef_2G		0	0-2047	MIN<-->MAX cyclation
42	GHSTCoef_2B		0	0-2047	MIN<-->MAX cyclation
43	BlkGHSTCoef_R		0	0-2047	MIN<-->MAX cyclation
44	BlkGHSTCoef_G		0	0-2047	MIN<-->MAX cyclation
45	BlkGHSTCoef_B		0	0-2047	MIN<-->MAX cyclation
46	CRSTLKCoef_R_C		0	0-2047	MIN<-->MAX cyclation
47	CRSTLKCoef_R_S		128	0-255	
48	CRSTLKCoef_R_E		128	0-255	
49	CRSTLKCoef_G_C		0	0-2047	MIN<-->MAX cyclation
50	CRSTLKCoef_G_S		128	0-255	
51	CRSTLKCoef_G_E		128	0-255	
52	CRSTLKCoef_B_C		0	0-2047	MIN<-->MAX cyclation
53	CRSTLKCoef_B_S		128	0-255	
54	CRSTLKCoef_B_E		128	0-255	
55	ColshdCtrl		16	0-511	
56	ColshdCtrl_Ena		1	0-1	1: Enable, 0: Disable
57	ColshdCtrl_PreEna		0	0-1	1: Enable, 0: Disable
58	Colshd_RLMin		335	0-1023	
59	Colshd_RLMid2		400	0-1023	
60	Colshd_RLMid1		448	0-1023	
61	Colshd_RLMax		564	0-1023	
62	Colshd_GLMin		319	0-1023	
63	Colshd_GLMid2		383	0-1023	
64	Colshd_GLMid1		425	0-1023	
65	Colshd_GLMax		516	0-1023	
66	Colshd_BLMin		308	0-1023	
67	Colshd_BLMid2		380	0-1023	
68	Colshd_BLMid1		425	0-1023	
69	Colshd_BLMax		530	0-1023	
70	Colshd_Pre_Tbl		0	0-255	
71	EnaHSync		0	0-1	
72	OutPPos_H		112	0-2047	
73	Pixel_CONT_Out		2048	0-4095	

Group/ Item	Item Name	Function	Initial	Range	Note
74	H_Sync		0	0-2047	
75	V_Sync		0	0-255	
76	FlickerMode		0	0-3	
77	EnaVSync		0	0-1	
78	EnbyPosUp1		33	0-255	
79	EnbyPosDwn1		821	0-1023	
80	EnbyPosUp2		33	0-255	
81	EnbyPosDwn2		821	0-1023	
82	FrmIRRMode		3	0-3	
83	CRCTCoef_R_C		0	0-2047	
84	CRCTCoef_R_S		128	0-255	
85	CRCTCoef_R_E		128	0-255	
86	CRCTCoef_G_C		0	0-2047	
87	CRCTCoef_G_S		128	0-255	
88	CRCTCoef_G_E		128	0-255	
89	CRCTCoef_B_C		0	0-2047	
90	CRCTCoef_B_S		128	0-255	
91	CRCTCoef_B_E		128	0-255	
92	CRSTLK_COEF2_R_C		0	0-2047	
93	CRSTLK_COEF2_R_S		126	0-255	
94	CRSTLK_COEF2_R_E		128	0-255	
95	CRSTLK_COEF2_G_C		0	0-2047	
96	CRSTLK_COEF2_G_S		126	0-255	
97	CRSTLK_COEF2_G_E		128	0-255	
98	CRSTLK_COEF2_B_C		0	0-2047	
99	CRSTLK_COEF2_B_S		126	0-255	
100	CRSTLK_COEF2_B_E		128	0-255	
101	OutputLimitMax_R		4095	0-4095	STANDARD
			4095	0-4095	DYNAMIC
			4095	0-4095	REAL
			4095	0-4095	BLACKBOARD
			4095	0-4095	COLORBOARD
102	OutputLimitMax_G		4095	0-4095	STANDARD
			4095	0-4095	DYNAMIC
			4095	0-4095	REAL
			4095	0-4095	BLACKBOARD
			4095	0-4095	COLORBOARD
103	OutputLimitMax_B		4095	0-4095	STANDARD
			4095	0-4095	DYNAMIC
			4095	0-4095	REAL
104	VideoRRefCont_H		0	0-4095	
105	VideoRRefCont_L		3232	0-4095	
106	DCOffset_MNS_R		0	0-1023	
107	DCOffset_MNS_R_01		0	0-2047	
108	DCOffset_MNS_R_02		0	0-2047	
109	DCOffset_MNS_R_03		0	0-2047	
110	DCOffset_MNS_R_04		0	0-2047	
111	DCOffset_MNS_R_05		0	0-2047	
112	DCOffset_MNS_R_06		0	0-2047	
113	DCOffset_MNS_R_07		0	0-2047	
114	DCOffset_MNS_R_08		0	0-2047	
115	DCOffset_MNS_R_09		0	0-2047	
116	DCOffset_MNS_R_10		0	0-2047	
117	DCOffset_MNS_R_11		0	0-2047	
118	DCOffset_MNS_R_12		21	0-2047	
119	DCOffset_PLS_R		0	0-1023	MIN<-->MAX cyclation
120	DCOffset_PLS_R_01		0	0-2047	MIN<-->MAX cyclation
121	DCOffset_PLS_R_02		0	0-2047	MIN<-->MAX cyclation
122	DCOffset_PLS_R_03		0	0-2047	MIN<-->MAX cyclation
123	DCOffset_PLS_R_04		0	0-2047	MIN<-->MAX cyclation
124	DCOffset_PLS_R_05		0	0-2047	MIN<-->MAX cyclation
125	DCOffset_PLS_R_06		0	0-2047	MIN<-->MAX cyclation
126	DCOffset_PLS_R_07		0	0-2047	MIN<-->MAX cyclation
127	DCOffset_PLS_R_08		0	0-2047	MIN<-->MAX cyclation
128	DCOffset_PLS_R_09		0	0-2047	MIN<-->MAX cyclation
129	DCOffset_PLS_R_10		0	0-2047	MIN<-->MAX cyclation
130	DCOffset_PLS_R_11		0	0-2047	MIN<-->MAX cyclation
131	DCOffset_PLS_R_12		2046	0-2047	MIN<-->MAX cyclation
132	Lvl9Mode_R_0000		0	0-1023	MIN<-->MAX cyclation
133	Lvl9Mode_R_0512		0	0-1023	MIN<-->MAX cyclation

Group/ Item	Item Name	Function	Initial	Range	Note
134	Lvl9Mode_R_1024		0	0-1023	MIN<-->MAX cyclation
135	Lvl9Mode_R_1536		0	0-1023	MIN<-->MAX cyclation
136	Lvl9Mode_R_2048		0	0-1023	MIN<-->MAX cyclation
137	Lvl9Mode_R_2560		0	0-1023	MIN<-->MAX cyclation
138	Lvl9Mode_R_3072		0	0-1023	MIN<-->MAX cyclation
139	Lvl9Mode_R_3584		0	0-1023	MIN<-->MAX cyclation
140	Lvl9Mode_R_4096		0	0-1023	MIN<-->MAX cyclation
141	VideoGRefCont_H		0	0-4095	
142	VideoGRefCont_L		3232	0-4095	
143	DCOffset_MNS_G		0	0-1023	MIN<-->MAX cyclation
144	DCOffset_MNS_G_01		0	0-2047	MIN<-->MAX cyclation
145	DCOffset_MNS_G_02		0	0-2047	MIN<-->MAX cyclation
146	DCOffset_MNS_G_03		0	0-2047	MIN<-->MAX cyclation
147	DCOffset_MNS_G_04		0	0-2047	MIN<-->MAX cyclation
148	DCOffset_MNS_G_05		0	0-2047	MIN<-->MAX cyclation
149	DCOffset_MNS_G_06		0	0-2047	MIN<-->MAX cyclation
150	DCOffset_MNS_G_07		0	0-2047	MIN<-->MAX cyclation
151	DCOffset_MNS_G_08		0	0-2047	MIN<-->MAX cyclation
152	DCOffset_MNS_G_09		0	0-2047	MIN<-->MAX cyclation
153	DCOffset_MNS_G_10		0	0-2047	MIN<-->MAX cyclation
154	DCOffset_MNS_G_11		0	0-2047	MIN<-->MAX cyclation
155	DCOffset_MNS_G_12		21	0-2047	MIN<-->MAX cyclation
156	DCOffset_PLS_G		0	0-1023	MIN<-->MAX cyclation
157	DCOffset_PLS_G_01		0	0-2047	MIN<-->MAX cyclation
158	DCOffset_PLS_G_02		0	0-2047	MIN<-->MAX cyclation
159	DCOffset_PLS_G_03		0	0-2047	MIN<-->MAX cyclation
160	DCOffset_PLS_G_04		0	0-2047	MIN<-->MAX cyclation
161	DCOffset_PLS_G_05		0	0-2047	MIN<-->MAX cyclation
162	DCOffset_PLS_G_06		0	0-2047	MIN<-->MAX cyclation
163	DCOffset_PLS_G_07		0	0-2047	MIN<-->MAX cyclation
164	DCOffset_PLS_G_08		0	0-2047	MIN<-->MAX cyclation
165	DCOffset_PLS_G_09		0	0-2047	MIN<-->MAX cyclation
166	DCOffset_PLS_G_10		0	0-2047	MIN<-->MAX cyclation
167	DCOffset_PLS_G_11		0	0-2047	MIN<-->MAX cyclation
168	DCOffset_PLS_G_12		2046	0-2047	MIN<-->MAX cyclation
169	Lvl9Mode_G_0000		0	0-1023	MIN<-->MAX cyclation
170	Lvl9Mode_G_0512		0	0-1023	MIN<-->MAX cyclation
171	Lvl9Mode_G_1024		0	0-1023	MIN<-->MAX cyclation
172	Lvl9Mode_G_1536		0	0-1023	MIN<-->MAX cyclation
173	Lvl9Mode_G_2048		0	0-1023	MIN<-->MAX cyclation
174	Lvl9Mode_G_2560		0	0-1023	MIN<-->MAX cyclation
175	Lvl9Mode_G_3072		0	0-1023	MIN<-->MAX cyclation
176	Lvl9Mode_G_3584		0	0-1023	MIN<-->MAX cyclation
177	Lvl9Mode_G_4096		0	0-1023	MIN<-->MAX cyclation
178	VideoBRefCont_H		0	0-4095	
179	VideoBRefCont_L		3232	0-4095	
180	DCOffset_MNS_B		0	0-1023	MIN<-->MAX cyclation
181	DCOffset_MNS_B_01		0	0-2047	MIN<-->MAX cyclation
182	DCOffset_MNS_B_02		0	0-2047	MIN<-->MAX cyclation
183	DCOffset_MNS_B_03		0	0-2047	MIN<-->MAX cyclation
184	DCOffset_MNS_B_04		0	0-2047	MIN<-->MAX cyclation
185	DCOffset_MNS_B_05		0	0-2047	MIN<-->MAX cyclation
186	DCOffset_MNS_B_06		0	0-2047	MIN<-->MAX cyclation
187	DCOffset_MNS_B_07		0	0-2047	MIN<-->MAX cyclation
188	DCOffset_MNS_B_08		0	0-2047	MIN<-->MAX cyclation
189	DCOffset_MNS_B_09		0	0-2047	MIN<-->MAX cyclation
190	DCOffset_MNS_B_10		0	0-2047	MIN<-->MAX cyclation
191	DCOffset_MNS_B_11		0	0-2047	MIN<-->MAX cyclation
192	DCOffset_MNS_B_12		21	0-2047	MIN<-->MAX cyclation
193	DCOffset_PLS_B		0	0-1023	MIN<-->MAX cyclation
194	DCOffset_PLS_B_01		0	0-2047	MIN<-->MAX cyclation
195	DCOffset_PLS_B_02		0	0-2047	MIN<-->MAX cyclation
196	DCOffset_PLS_B_03		0	0-2047	MIN<-->MAX cyclation
197	DCOffset_PLS_B_04		0	0-2047	MIN<-->MAX cyclation
198	DCOffset_PLS_B_05		0	0-2047	MIN<-->MAX cyclation
199	DCOffset_PLS_B_06		0	0-2047	MIN<-->MAX cyclation
200	DCOffset_PLS_B_07		0	0-2047	MIN<-->MAX cyclation
201	DCOffset_PLS_B_08		0	0-2047	MIN<-->MAX cyclation
202	DCOffset_PLS_B_09		0	0-2047	MIN<-->MAX cyclation
203	DCOffset_PLS_B_10		0	0-2047	MIN<-->MAX cyclation

Group/ Item	Item Name	Function	Initial	Range	Note
204	DCOffset_PLS_B_11		0	0-2047	MIN<-->MAX cyclation
205	DCOffset_PLS_B_12		2046	0-2047	MIN<-->MAX cyclation
206	Lvl9Mode_B_0000		0	0-2047	MIN<-->MAX cyclation
207	Lvl9Mode_B_0512		0	0-1023	MIN<-->MAX cyclation
208	Lvl9Mode_B_1024		0	0-1023	MIN<-->MAX cyclation
209	Lvl9Mode_B_1536		0	0-1023	MIN<-->MAX cyclation
210	Lvl9Mode_B_2048		0	0-1023	MIN<-->MAX cyclation
211	Lvl9Mode_B_2560		0	0-1023	MIN<-->MAX cyclation
212	Lvl9Mode_B_3072		0	0-1023	MIN<-->MAX cyclation
213	Lvl9Mode_B_3584		0	0-1023	MIN<-->MAX cyclation
214	Lvl9Mode_B_4096		0	0-1023	MIN<-->MAX cyclation
215	VideoCont_R		2048	0-4095	Standard
			2048	0-4095	Dynamic
			2048	0-4095	Real
			2048	0-4095	BlackBoard
			2048	0-4095	R_Board
			2048	0-4095	B_Board
			2048	0-4095	Y_Board
			2048	0-4095	G_Board
216	VideoBright_R		0	0-4095	Standard
			0	0-4095	Dynamic
			0	0-4095	Real
			0	0-4095	BlackBoard
			0	0-4095	R_Board
			0	0-4095	B_Board
			0	0-4095	Y_Board
			0	0-4095	G_Board
217	VideoGammaShift_R		0	0-4095	PC
			0	0-4095	AV
218	VideoCont_G		2048	0-4095	Standard
			2048	0-4095	Dynamic
			2048	0-4095	Real
			2048	0-4095	BlackBoard
			2048	0-4095	R_Board
			2048	0-4095	B_Board
			2048	0-4095	Y_Board
			2048	0-4095	G_Board
219	VideoBright_G		0	0-4095	Standard
			0	0-4095	Dynamic
			0	0-4095	Real
			0	0-4095	BlackBoard
			0	0-4095	R_Board
			0	0-4095	B_Board
			0	0-4095	Y_Board
			0	0-4095	G_Board
220	VideoGammaShift_G		0	0-4095	PC
			0	0-4095	AV
221	VideoCont_B		2048	0-4095	Standard
			2048	0-4095	Dynamic
			2048	0-4095	Real
			2048	0-4095	BlackBoard
			2048	0-4095	R_Board
			2048	0-4095	B_Board
			2048	0-4095	Y_Board
			2048	0-4095	G_Board
222	VideoBright_B		0	0-4095	Standard
			0	0-4095	Dynamic
			0	0-4095	Real
			0	0-4095	BlackBoard
			0	0-4095	R_Board
			0	0-4095	B_Board
			0	0-4095	Y_Board
			0	0-4095	G_Board
223	VideoGammaShift_B		0	0-4095	PC
			0	0-4095	AV
Group 105	**Panel Services(6200)**				
0	201_R		4	0-15	
1	601_G		4	0-15	

Group/ Item	Item Name	Function	Initial	Range	Note
2	A01_B		4	0-15	
3	202_R		4	0-127	
4	602_G		4	0-127	
5	A02_B		4	0-127	
6	205_R		4	0-31	
7	605_G		4	0-31	
8	A05_B		4	0-31	
9	300_R		190	0-255	
10	700_G		190	0-255	
11	B00_B		190	0-255	
12	FPDDRIM_R		1/273	0-512	FPD-C,(Ready only)(L/R)
13	FPD_MODE_R		1/1	0-3	FPD-C,(Ready only)(L/R)
14	FPD_ED1_R		0/1	0-1	FPD-C(Ready only)(L/R
15	FPD_ED2_R		0/1	0-1	FPD-C,(Ready only)(L/R)
16	PARA1_R		1	0-31	Ready only
17	PARA1_1_R		1	0-7	
18	PARA1_2_R		0	0-1	
19	PARA2_R		513	0-1023	
20	PARA3_R		512	0-1023	
21	FPDDRI_R		879	0-1023	
22	FPDDRI 1_R		0	0-1023	
23	FPD_G		1/273	0-512	FPD-C,(Ready only)(L/R)
24	FPD_MODE_G		1/1	0-3	FPD-C,(Ready only)(L/R)
25	FPD_ED1_G		0/1	0-1	FPD-C,(Ready only)(L/R)
26	FPD_ED2_G		0/1	0-1	FPD-C,(Ready only)(L/R)
27	PARA1_G		1	0-31	Ready only
28	PARA1-1_G		1	0-7	
29	PARA1_2_G		0	0-1	
30	PARA2_G		513	0-1023	
31	PARA3_G		512	0-1023	
32	FPDDI_G		879	0-1023	
33	FPDDI 1_G		0	0-1023	
34	FPD_B		1/273	1-512	FPD-C,(Ready only)(L/R)
35	FPD_MODE_B		1/1	1-3	FPD-C,(Ready only)(L/R)
36	FPD_ED1_B		0/1	0-1	FPD-C,(Ready only)(L/R)
37	FPD_ED2_B		0/1	0-1	FPD-C,(Ready only)(L/R)
38	PARA1_B		1	0-31	Ready only
39	PARA1_1_B		1	0-7	
40	PARA1_2_B		0	0-1	
41	PARA2_B		513	0-1023	
42	PARA3_B		512	0-1023	
43	FPDDRI_B		879	0-1023	
44	FPDDRI 1_B		0	0-1023	
Group 107	**Panel Service(8030)**				
0	Vsync input		0	0-1	0:enable/1:disable
1	Timer for Recovery starting		1	0-1	0:enable/1:disable
2	Color correction		0	0-1	0:enable/1:disable
3	SP1 receiver		0	0-1	0:enable/1:disable
4	UART(UPUside)		0	0-1	can not be changed for service
5	3Wire serial command generator		0	0-1	0:enable/1:disable
6	Output of 3 wire serial I/F		0	0-1	0:enable/1:disable
7	ColorCorrectionTable_R		1722	0-4095	AV/PC
8	ColorCorrectionTable_R		1722	0-4095	AV/PC

Group/ Item	Item Name	Function	Initial	Range	Note
9	ColorCorrectionTable_R		1722	0-4095	AV/PC
10	ColorCorrectionTable_R		1920	0-4095	AV/PC
11	ColorCorrectionTable_R		2029	0-4095	AV/PC
12	ColorCorrectionTable_R		2046	0-4095	AV/PC
13	ColorCorrectionTable_R		2047	0-4095	AV/PC
14	ColorCorrectionTable_R		2048	0-4095	AV/PC
15	ColorCorrectionTable_R		2048	0-4095	AV/PC
16	ColorCorrectionTable_R		2048	0-4095	AV/PC
17	ColorCorrectionTable_G		1370	0-4095	AV/PC
18	ColorCorrectionTable_G		1370	0-4095	AV/PC
19	ColorCorrectionTable_G		1370	0-4095	AV/PC
20	ColorCorrectionTable_G		1691	0-4095	AV/PC
21	ColorCorrectionTable_G		1894	0-4095	AV/PC
22	ColorCorrectionTable_G		1967	0-4095	AV/PC
23	ColorCorrectionTable_G		1993	0-4095	AV/PC
24	ColorCorrectionTable_G		2022	0-4095	AV/PC
25	ColorCorrectionTable_G		2048	0-4095	AV/PC
26	ColorCorrectionTable_G		2048	0-4095	AV/PC
27	ColorCorrectionTable_B		2048	0-4095	AV/PC
28	ColorCorrectionTable_B		2048	0-4095	AV/PC
29	ColorCorrectionTable_B		2048	0-4095	AV/PC
30	ColorCorrectionTable_B		2048	0-4095	AV/PC
31	ColorCorrectionTable_B		2048	0-4095	AV/PC
32	ColorCorrectionTable_B		2048	0-4095	AV/PC
33	ColorCorrectionTable_B		2048	0-4095	AV/PC
34	ColorCorrectionTable_B		2048	0-4095	AV/PC
35	ColorCorrectionTable_B		2048	0-4095	AV/PC
36	ColorCorrectionTable_B		2048	0-4095	AV/PC
37	VSYNC pulse width		13	0-4095	
38	Vsync generation interval		313	0-1023	
39	SCIOUT L-period		7	0-255	
40	Interval setting for recovery		8	0-1023	
Group 200	**Option**				
0	Logo Prohibition (Forced No Brand)	Logo Prohibition (0: Menu, 1: Forced, 2: China, 3-9: not used)	0	0 - 2	Effective after AC On
1	RS232C Baudrate	Baud Rate	0	0 - 1	0: 19200bps, 1: 9600bps
4	CABLE SW	Long Cable	0	0 - 10	0: Disable, 1: Enable
5	PW Debug Command Enable		0	0 - 1	0:Disable (Serial Command Enable) 1: Enable (PW Debug Mode)
6	Device Refresh Disable		0	0 - 1	0:Enable, 1:Disable No last memory
21	Lamp Warning Time(NORMAL)		4	1-16	
22	Lamp Warning(ECO)		5	1-16	
50	Lamp Replacement Display	Lamp Warning Display On / Off	1	0 - 1	1: On, 0: Off
51	Filter Warning Display	Filter Warning Display On / Off	1	0 - 1	1: On, 0: Off
52	Lamp Counter reset Times	Reset Times of Lamp Counter	0	0 - 255	Read only
54	Factory Default Execute Times	Reset times of Factory Default	0	0 - 255	Read only
55	Motor Disable	Motors Disable	0	0 - 1	0: On, 1: Off
56	Menu Position	Move menu (X asis)	0	0 - 1024	
57	Menu Position	Move menu (Y asis)	0	0 - 1024	
58	Lamp Go Out		0	0 - 1	
63	Source Search Enable	Source Search Enable	1	0 -1	0: Disable 1:Enable
65	Mute with video		1	0-1	
67	Monitor		1	0-1	0:OFF 1:ON(default)
70	Analog ADC Device Select		0	0-1	0:ISL51002, 1:PW392 AFE
71	Component ADC Device Select	0: ISK51002, 1:PW392 AFE	1	0 - 1	
80	Determination Setting	0: English 1: Japanese	0	0 - 1	

Group/ Item	Item Name	Function	Initial	Range	Note
100	Disable Auto Picture Control	0: Normal operation 1:Auto Picture Control	-	0 - 1	
Group 201	**Option (signal)**				
0	FrameLock Option		1	0 - 1	
1	Dither Enable	VSBEG Setting	1	0 - 1	
3	Field Sense Inert Enable	0: Disable, 1:Enable	0	0 - 1	
15	WPS PIN code (last 4 bits)		0	0 - 9999	
Group 204	**Simulation mode**				
0	PW392C Enable		0	0 -1	
1	PW610 Enable		-	0 - 1	
Group 205	**Spread Spectrum**				
0	Enable	0: Disable 1: Enable	1	0 -1	
1	Spead factor	Default: 100	100	0 - 300	
2	Wave period	Default: 300	80	1 - 500	
Group 210	**LampControl**				
2	DIMMER_CTRL_LEVEL MIN	Luminance Level 00h Data for Dimmer: Dim Level MIN at the Value	3	0 - 255	
3	DIMMER_CTRL_LEVEL1	Luminance Level 10h Data for Dimmer: Dim Level 10h at the less than the Value	5	0 - 255	
4	DIMMER_CTRL_LEVEL2	Luminance Level 20h Data for Dimmer: Dim Level 20h at the less than the Value	11	0 - 255	
5	DIMMER_CTRL_LEVEL3	Luminance Level 30h Data for Dimmer: Dim Level 30h at the less than the Value	28	0 - 255	
6	DIMMER_CTRL_LEVEL4	Luminance Level 40h Data for Dimmer: Dim Level 40h at the less than the Value	43	0 - 255	
7	DIMMER_CTRL_LEVEL5	Luminance Level 50h Data for Dimmer: Dim Level 50h at the less than the Value	58	0 - 255	
8	DIMMER_CTRL_LEVEL6	Luminance Level 60h Data for Dimmer: Dim Level 60h at the less than the Value	80	0 - 255	
9	DIMMER_CTRL_LEVEL7	Luminance Level 70h Data for Dimmer: Dim Level 70h at the less than the Value	130	0 - 255	
10	DIMMER_CTRL_LEVEL MAX	Luminance Level 80h Data for Dimmer: Dim Level 80h at the less than the Value	180	0 - 255	
11	DIMMER_LEVEL_AUTO_Max	Luminance Level Max Data when Lamp mode is Auto	128	0 - 80h	
12	DIMMER_LEVEL_AUTO_Min	Luminance Level Min Data when Lamp mode is Auto	38	0 - 80h	
16	DIMMER_LEVEL_ECO2	Eco2 Dimmer Level	71	1 - 128	
17	DIMMER_AVERAGE_POINT	Luminance Data Average Point for Dimmer	2	1 - 16	
18	DIMMER_AVERAGE_DATA	Luminance Data Average Value for Dimmer	-	-	* Read only
19	DIMMER_LEVEL_AUTO	Current Dimmer Level	-	-	* Read only
20	DIMMER_LEVEL_NORMAL	Normal Dimmer Level	128	0 - 128	
21	DIMMER_LEVEL_ECO	Eco Dimmer Level	89	0 - 128	
23	VOLTAGE_LEVEL	Lamp Voltage	-	-	* Read only
25	Past Calculation System		-	-	* Read only
26	New Calculation System		-	-	* Read only
27	Red Average Level		-	-	* Read only
28	Green Average Level		-	-	* Read only
29	Blue Average Level		-	-	* Read only
30	SAT		-	-	* Read only
31	Chroma Coefficient		160	0-255	
Group 220	**Projector Warning Log**				
0	Warning Log_1		-	0-32767	
..	..		-	-	
49	Warning Log_50		-	0-32767	

Group/ Item	Item Name	Function	Initial	Range	Note
50	Warning Log Reset		1	0-10	
Group 250	**FAN Control**				
0	FAN1 MIN ADJUST (DAC)	DAC Output for Fan Adjust the tolerance of DAC and Fan Voltage. * Lamp mode is forced Eco	21	0 - 255	
1	FAN1 MAX ADJUST (DAC)		206	0 - 255	
2	FAN2 MIN ADJUST (DAC)		42	0 - 255	
3	FAN2 MAX ADJUST (DAC)		205	0 - 255	
4	FAN3 MIN ADJUST (DAC)		38	0 - 255	
5	FAN3 MAX ADJUST (DAC)		193	0 - 255	
Group 252	**Fan Option**				
1	SAFETY Switch	For test purpose	0	0, 3 - 6	
2	FAN MANUAL SWITCH	0: Auto, 1: Manual	0	0 - 3	
3	FAN1 MANUAL VOLTAGE	Fan Voltage (unit : 0.1V) Effective only when Fan Manual switch is 1	100	0 - 255	
4	FAN2 MANUAL VOLTAGE		100	0 - 255	
5	FAN3 MANUAL VOLTAGE		100	0 - 255	
9	All Fan MaxMin Control	0 : Normal 1 : Lamp Normal / Fan Min 2 : Lamp Normal / Fan Max 3 : Lamp Eco / Fan Min 4 : Lamp Eco / Fan Max	0	0 - 4	

Group 253	Fan Temp Error Setting	(Memorized)	Normal (OFF)	Ceiling (OFF)	HiLand Normal (ON1/ ON2)	HiLand Ceiling (ON1/ ON2)		
5	Temp A Warning (Normal)	Temp. A to judge the Temp Error at Normal (Room)	38	38	35/35	35/35	30-100	
6	Temp B Warning (Normal)	Temp. B to judge the Temp Error at Normal (Panel)	52	52	51/52	51/52	30-100	
7	Temp C Warning (Normal)	Temp. C to judge the Temp Error at Normal (Lamp)	73	73	69/70	69/70	30-100	
8	Temp B-A Warning (Normal)	Temp. B-A to judge the Temp Error at Normal (Clogging Det.)	100	100	100/100	100/100	0-100	
9	Temp C-A Warning (Normal)	Temp. C-A to judge the Temp Error at Normal (Clogging Det.)	100	100	100/100	100/100	0-100	
10	Temp A Warning (Eco)	Temp. A to judge the Temp Error at Eco (Room)	38	38	35/35	35/35	30-100	
11	Temp B Warning (Eco)	Temp. B to judge the Temp Error at Eco (Panel)	52	52	50/52	50/52	30-100	
12	Temp C Warning (Eco)	Temp. C to judge the Temp Error at Eco (Lamp)	70	70	65/68	65/68	30-100	
13	Temp B-A Warning (Eco)	Temp. B-A to judge the Temp Error at Normal (Clogging Det.)	100	100	100/100	100/100	0-100	
14	Temp C-A Warning (Eco)	Temp. C-A to judge the Temp Error at Normal (Clogging Det.)	100	100	100/100	100/100	0-100	
15	Temp A Warning Offset (Temp)	Offset of Temp Error (Temp.) Error Setting Value is increased XC at the below condition * Standby * Right to turn on the lamp *Right to change the Lamp mode	5				0-100	
16	Temp B Warning Offset (Temp)		5				0-100	
17	Temp C Warning Offset (Temp)		5				0-100	
18	Temp B-A Warning Offset (Temp)		0				0-100	
19	Temp C-A Warning Offset (Temp)		0				0-100	
20	Temp A Warning Offset (Time)	Offset of Temp Error (Minutes) Error Setting Value is increased X minute at the below condition * Standby * Right to turn on the lamp *Right to change the Lamp mode	3				0-5	
21	Temp B Warning Offset (Time)		3				0-5	
22	Temp C Warning Offset (Time)		3				0-5	
23	Temp B-A Warning Offset (Time)		3				0-5	
24	Temp C-A Warning Offset (Time)		3				0-5	

Group 254	Fan Control Range Setting (Temp./Voltage)	Normal (OFF)	Ceiling (OFF)	Hiland Normal (ON1 DIF/ ON2)	Hiland Ceiling (ON1 DIF/ON2)

Electrical Adjustments

Group/ Item	Item Name	Function	Initial				Range	Note
10	Normal Fan Control Min Temp	Temp Sensor Control Start/End Tem.p at Normal	28	27	27/27	27/26	20-100	
11	Normal Fan Control Max Temp		36	35	32/32	32/32	20-100	
12	Normal Fan1 Min	Fan voltage value at Normal (unit: 0.1V)	65	65	78/90	78/90	0-255	
13	Normal Fan1 Max		130	130	135/135	135/135	0-255	
14	Normal Fan2 Min		67	70	85/100	85/100	0-255	
15	Normal Fan2 Max		120	120	130/135	130/135	0-255	
16	Normal Fan3 Min		70	70	90/105	90/105	0-255	
17	Normal Fan3 Max		75	75	95/112	95/112	0-255	
20	Eco Fan Control Min Temp	Temp Senser Control Start/End Tem.p at Eco	28	28	26/26	26/26	20-100	
21	Eco Fan Control Max Temp		35	35	32/32	32/32	20-100	
22	Eco Fan1 Min	Fan voltage value at Eco (unit: 0.1V)	50	50	67/80	67/80	0-255	
23	Eco Fan1 Max		120	120	125/130	125/130	0-255	
24	Eco Fan2 Min		55	57	67/85	67/85	0-255	
25	Eco Fan2 Max		100	100	110/120	110/120	0-255	
26	Eco Fan3 Min		35	35	47/55	47/55	0-255	
27	Eco Fan3 Max		38	38	52/60	52/60	0-255	
Group 255	**Fan Start/Cooling Setting**							
0	Fan1 Initial Volt	Fan Start Voltage (0.1V)	60				0-255	
1	Fan2 Initial Volt		60				0-255	
2	Fan3 Initial Volt	Fan Start Voltage (0.1V)	50				0-255	
8	Cooling Time L1	Cooling Time setting at Fan Mode L1 (x 30 sec) 1: 30, 3: 90, 15: 450 sec.	2				1-15	
9	Cooling Time L2	Cooling Time setting at Fan Mode L2 (x 30 sec) 1: 30, 3: 90, 15: 450 sec.	3				1-15	
10	Temp Error Cooling Time	Cooling Time setting at Temp Error (x 30 sec)	3				1-15	
11	OnStart Cooling Start Thresh-old		38				0-100	
12	After shutdown cooling	Cooling after shutdown (0: No, 1: Yes)	1				0-1	
Group 257	**Fan Dimmer Setting**							
0	Dimmer Average Check Period	Dimmer Average measurement Time (0:10sec, 1:30sec, 2:6sec, 90sec...10:300sec)	1				0-10	
1	Cooling Gain	Dimmer Average Value (Read only)	-				-	
Group 259	**Fan Temp for MIC IC**							
0	Standby Fan B Voltage	Fan Voltage (Unit:0.1V)	52				30-135	
Group 260	**Auto Calibration (Common) * Auto Calibration**							
0	Execute Calibration		0				0 - 1	Executes Auto-Calibration when changing the Value (PC White 100%)
1	Loop Count	Maximum Execution Times (OFFSET->GAIN)	8				1 - 30	
2	Auto Status	Result of Auto-Calibration (Last Memory)	0				0 / 1 / 9	0: OK, 1: Adjusting,9: Error * ReadOnly
3	AutoWait	Wait Value for each setting	3				1 - 20	
4	CHECK -Tolerance	Tolerance of OFFSET	4				1 - 255	
5	Time out wait	Time out waiting time(sec)	20				1-255	
Group 261	**Auto Calibration (RGB)**							
0	OFFSET AREA H START	Black Level Acquiring Area H-Start Position	975				0 - 1000	
1	OFFSET AREA V START	Black Level Acquiring Area V-Start Position	500				0 - 1000	
2	GAIN AREA H START	White Level Acquiring Area H-Start Position	25				0 - 1000	
3	GAIN AREA V START	White Level Acquiring Area V-Start Position	500				0 - 1000	
4	Image AREA H WIDTH	Black/White Level Acquiring Area	13				0 - 4095	
5	Image AREA V HIGHT	Black/White Level Acquiring Area Height	9				0 - 4095	

Group/ Item	Item Name	Function	Initial	Range	Note
6	OFFSET target	Target Value of Black Level Adj.	20	0 - 1023	
7	OFFSET tolerance	Tolerance of Black Level Adj.	1	1 - 1023	
8	GAIN target	Target Value of White Level Adj.	955	0 - 1023	
9	GAIN tolerance	Tolerance of White Level Adj.	1	1 -1023	
10	Image Level tolerance		8	1-255	
Group 262	**Auto Calibration (CVBS/SVIDEO)**				
0	Y Image Area Start X	Y Acquiring Area H-Start Position	20	0 - 1000	
1	Y Image Area Start Y	Y Acquiring Area V-Start Position	200	0 - 1000	
6	Image Area H Width	Image Level Acquiring Area	8	0 - 4095	
7	Image Area V Hight	Image Level Acquiring Area Height	9	0 - 4095	
8	Y Target Level	Target Value of Y Level Adj.	915	0 - 1023	
11	Gain Tolerance	Tolerance of Level Adj.	1	1 - 255	
12	Delta Gain	Deviation Width of Gain Value	2	1 - 255	
Group 264	**Auto Calibration (YCbCr)**				
0	Y-OFFSET AREA H START	Y - Offset Acquiring Area H-Start Position	925	0 - 1000	
1	Y-OFFSET AREA V START	Y - Offset Acquiring Area V-Start Position	500	0 - 1000	
2	CB - OFFSET AREA H START	CB - Offset Acquiring Area H-Start Position	925	0 - 1000	If not used: use Y's value
3	CB - OFFSET AREA V START	CB - Offset Acquiring Area V-Start Position	500	0 - 1000	If not used: use Y's value
4	CR - OFFSET AREA H START	CR - Offset Acquiring Area H-Start Position	925	0 - 1000	If not used: use Y's value
5	CR - OFFSET AREA V START	CR - Offset Acquiring Area V-Start Position	500	0 - 1000	If not used: use Y's value
6	Y - GAIN AREA H START		50	0 - 1000	
7	Y - GAIN AREA V START		500	0 - 1000	
8	CB - GAIN AREA H START		800	0 - 1000	
9	CB - GAIN AREA V START		500	0 - 1000	
10	CR - GAIN AREA H START		700	0 - 1000	
11	CR - GAIN AREA V START		500	0 - 1000	
12	Image AREA H WIDTH	YCBCR Level Acquiring Area	13	0 - 4095	
13	Image AREA V HIGHT	YCBCR Level Acquiring Area Height	9	0 - 4095	
14	Y - OFFSET TARTGET		4	0 - 1023	
15	CB OFFSET TARGET		512	0 - 1023	
16	CR OFFSET TARGET		512	0 - 1023	
17	Y - GAIN TARGET		906	0 - 1023	
18	CB - GAIN TARGET		955	0 - 1023	
19	CR - GAIN TARGET		955	0 - 1023	
20	OFFSET tolerance	Tolerance of OFFSET Adj.	1	1 - 255	
21	GAIN tolerance	Tolerance of GAIN Adj.	2	1 - 255	
22	Image Level Tolerance		8	1 - 255	
Group 280	**AutoPC Adjust**				
0	AutoPCAdjustEnable	Auto-PC Adj Operation Enable if Un-supported Signal Input	0	0 - 1	0: Enable, 1: Disable
1	Frequency Step	Frequency Steps of TotalDot	1	0-3	
2	Frequency Threshold	Total Dot Frequency Threshold	5	0 - 10	0 [] <--- -----> 10[Not matched]
3	Fine Phase	Do Phase Adj after Total Dot Adj.	1	0 - 1	0: Executes Fine Phase, 1: Not Execute
4	BLKDET	Black Level Detection Area	1	0 - 3	
5	PHASEMSK	Phase Detection Filter	0	0 - 3	0: Effective All Bit, 1: Disable Lower 1 bit 2: Disable Lower 2 bit, 3: Disable Lower 3 bit
Group 290	**Panel Type Check and setting**				
0	GammaL/R-View	Current Setting Check	0	0-20	0: Gamma for L-Turn 20: Gamma for R-Turn * Read only
1	GammaL/R-Change	Setting of Gamma	10	0-20	Sets L-Turn Gamma if the Value is set to 0. Sets R-Turn Gamma if the Value is set to 20.
Group 300	**Closed capture**				

Group/ Item	Item Name	Function	Initial	Range	Note
0	Caption Mode	Capture Mode: OFF/CC1/CC2/CC3/CC4	0	0-5	
1	Color Mode	Color Mode	0	0-1	
2	Multi Window Caption	0: OFF, 1:ON	1	0-1	
3	G2_MINLOWLEVEL	G2_MINLOWLEVEL(PW392 reg.0x0379)	0	0-255	
4	G2_MAXHILEVEL	G2_MAXHILEVEL(PW392 reg.0x037A)	255	0-255	
Group 500	**Composite (NTSC) Composite / S-Video**				
0					
1	Disp Dots		674	0 - 4095	
2	H Back Porch		25	0 - 4095	
3	V Back Porch		14	0 - 4095	
4	Disp Line		458	0 - 4095	
Group 501	**Composite (PAL) Composite / S-Video**				
0					
1	Disp Dots		662	0 - 4095	
2	H Back Porch		32	0 - 4095	
3	V Back Porch		18	0 - 4095	
4	Disp Line		542	0 - 4095	
Group 502	**Composite (SECAM) Composite / S-Video**				
0					
1	Disp Dots		662	0 - 4095	
2	H Back Porch		32	0 - 4095	
3	V Back Porch		18	0 - 4095	
4	Disp Line		542	0 - 4095	
Group 510	**SCART(480i)**				
0	Total Dots		858	0 - 4095	
1	Disp Dots		682	0 - 4095	
2	H Back Porch		133	0 - 4095	
3	V Back Porch		40	0 - 4095	
4	Disp Line		453	0 - 4095	
5	Clamp		68	0 - 255	
6	Clamp Width		20	0 - 255	
Group 511	**SCART(575i)**				
0			864	0 - 4095	
1	Disp Dots		650	0 - 4095	
2	H Back Porch		151	0 - 4095	
3	V Back Porch		63	0 - 4095	
4	Disp Line		516	0 - 4095	
5	Clamp		66	0 - 255	
6	Clamp Width		20	0 - 255	
Group 520	**YCbCr (480i)**				
0	Total Dots		858	0 - 4095	
1	Disp Dots		672	0 - 4095	
2	H Back Porch		145	0 - 4095	
3	V Back Porch		43	0 - 4095	
4	Disp Line		456	0 - 4095	
5	Clamp		72	0 - 4095	
6	Clamp Width		31	0 - 4095	
22	(USB) H Back Porch		91	0 - 4095	
23	(USB) V Back Porch		62	0 - 4095	
25	(USB)Clamp		10	0 - 4095	
26	(USB)Clamp Width		31	0 - 4095	
Group 521	**YCbCr (575i)**				
0	Total Dots		864	0 - 4095	
1	Disp Dots		656	0 - 4095	
2	H Back Porch		162	0 - 4095	

Group/ Item	Item Name	Function	Initial	Range	Note
3	V Back Porch		59	0 - 4095	
4	Disp Line		538	0 - 4095	
5	Clamp		98	0 - 255	
6	Clamp Width		31	0 - 255	
22	(USB) H Back Porch		108	0 - 4095	
23	(USB) V Back Porch		76	0 - 4095	
25	(USB)Clamp		10	0 - 4095	
26	(USB)Clamp Width		31	0 - 4095	
Group 522	**YCbCr (480P)**				
0	Total Dots		1716	0 - 4095	* Read only
1	Disp Dots		1368	0 - 4095	
2	H Back Porch		279	0 - 4095	
3	V Back Porch		46	0 - 4095	
4	Disp Line		458	0 - 4095	
5	Clamp		162	0 - 255	
6	Clamp Width		31	0 - 255	
22	(USB) H Back Porch		161	0 - 4095	
23	(USB) V Back Porch		50	0 - 4095	
25	(USB)Clamp		1	0 - 4095	
26	(USB)Clamp Width		31	0 - 4095	
Group 523	**YCbCr (575P)**				
0	Total Dots		1728	0 - 4095	* Read only
1	Disp Dots		1360	0 - 4095	
2	H Back Porch		302	0 - 4095	
3	V Back Porch		58	0 - 4095	
4	Disp Line		544	0 - 4095	
5	Clamp		160	0 - 255	
6	Clamp Width		31	0 - 255	
22	(USB) H Back Porch		187	0 - 4095	
23	(USB) V Back Porch		61	0 - 4095	
25	(USB)Clamp		1	0 - 4095	
26	(USB)Clamp Width		31	0 - 4095	
Group 524	**YCbCr (720P - 60)**				
0	Total Dots		1650	0 - 4095	* Read only
1	Disp Dots		1248	0 - 4095	
2	H Back Porch		314	0 - 4095	
3	V Back Porch		33	0 - 4095	
4	Disp Line		700	0 - 4095	
5	Clamp		187	0 - 255	
6	Clamp Width		31	0 - 255	
22	(USB) H Back Porch		284	0 - 4095	
23	(USB) V Back Porch		31	0 - 4095	
25	(USB)Clamp		110	0 - 4095	
26	(USB)Clamp Width		31	0 - 4095	
Group 525	**YCbCr (720P - 50)**				
0	Total Dots		1980	0 - 4095	* Read only
1	Disp Dots		1248	0 - 4095	
2	H Back Porch		313	0 - 4095	
3	V Back Porch		34	0 - 4095	
4	Disp Line		701	0 - 4095	
5	Clamp		110	0 - 255	
6	Clamp Width		31	0 - 255	
22	(USB) H Back Porch		281	0 - 4095	
23	(USB) V Back Porch		39	0 - 4095	
25	(USB)Clamp		110	0 - 4095	
26	(USB)Clamp Width		31	0 - 4095	
Group 526	**YCbCr (1080i - 60)**				
0	Total Dots		2200	0 - 4095	* Read only
1	Disp Dots		1874	0 - 4095	
2	H Back Porch		257	0 - 4095	
3	V Back Porch		50	0 - 4095	

Group/ Item	Item Name	Function	Initial	Range	Note
4	Disp Line		1052	0 - 4095	
5	Clamp		137	0 - 255	
6	Clamp Width		31	0 - 255	
22	(USB) H Back Porch		222	0 - 4095	
23	(USB) V Back Porch		85	0 - 4095	
25	(USB)Clamp		80	0 - 4095	
26	(USB)Clamp Width		31	0 - 4095	
Group 527	**YCbCr (1080i - 50)**				
0	Total Dots		2640	0 - 4095	* Read only
1	Disp Dots		1872	0 - 4095	
2	H Back Porch		258	0 - 4095	
3	V Back Porch		49	0 - 4095	
4	Disp Line		1052	0 - 4095	
5	Clamp		137	0 - 255	
6	Clamp Width		31	0 - 255	
22	(USB) H Back Porch		222	0 - 4095	
23	(USB) V Back Porch		83	0 - 4095	
25	(USB)Clamp		80	0 - 4095	
26	(USB)Clamp Width		31	0 - 4095	
Group 528	**YCbCr (1035i)**				
0	Total Dots		2200	0 - 4095	* Read only
1	Disp Dots		1872	0 - 4095	
2	H Back Porch		258	0 - 4095	
3	V Back Porch		87	0 - 4095	
4	Disp Line		1010	0 - 4095	
5	Clamp		141	0 - 255	
6	Clamp Width		31	0 - 255	
22	(USB) H Back Porch		222	0 - 4095	
23	(USB) V Back Porch		124	0 - 4095	
25	(USB)Clamp		80	0 - 4095	
26	(USB)Clamp Width		31	0 - 4095	
Group 540	**RGB Video (480i)**				
0	Total Dots		1716	0 - 4095	
1	Disp Dots		1346	0 - 4095	
2	H Back Porch		174	0 - 4095	
3	V Back Porch		48	0 - 4095	
4	Disp Line		460	0 - 4095	
5	Clamp		1	0 - 255	
6	Clamp Width		31	0 - 255	
22	(USB) H Back Porch		292	0 - 4095	
23	(USB) V Back Porch		45	0 - 4095	
25	(USB)Clamp		32	0 - 4095	
26	(USB)Clamp Width		31	0 - 4095	
Group 541	**RGB Video (575i)**				
0	Total Dots		1728	0 - 4095	
1	Disp Dots		1318	0 - 4095	
2	H Back Porch		208	0 - 4095	
3	V Back Porch		64	0 - 4095	
4	Disp Line		536	0 - 4095	
5	Clamp		1	0 - 255	
6	Clamp Width		31	0 - 255	
22	(USB)H Back Porch		328	0 - 4095	
23	(USB)V Back Porch		62	0 - 4095	
25	(USB) Clamp		32	0 - 4095	
26	(USB)Clamp Width		31	0 - 4095	
Group 542	**RGB Video (480P)**				
0	Total Dots		1716	0 - 4095	
1	Disp Dots		1368	0 - 4095	
2	H Back Porch		152	0 - 4095	
3	V Back Porch		34	0 - 4095	
4	Disp Line		479	0 - 4095	

Group/ Item	Item Name	Function	Initial	Range	Note
5	Clamp		1	0 - 255	
6	Clamp Width		31	0 - 255	
22	(USB)H Back Porch		276	0 - 4095	
23	(USB)V Back Porch		38	0 - 4095	
25	(USB) Clamp		32	0 - 4095	
26	(USB)Clamp Width		31	0 - 4095	
Group 543	**RGB Video (575P)**				
0	Total Dots		1728	0 - 4095	
1	Disp Dots		1360	0 - 4095	
2	H Back Porch		185	0 - 4095	
3	V Back Porch		56	0 - 4095	
4	Disp Line		540	0 - 4095	
5	Clamp		1	0 - 255	
6	Clamp Width		31	0 - 255	
22	(USB)H Back Porch		300	0 - 4095	
23	(USB)V Back Porch		60	0 - 4095	
25	(USB) Clamp		32	0 - 4095	
26	(USB)Clamp Width		31	0 - 4095	
Group 544	**RGB Video (720P - 60)**				
0	Total Dots		1650	0 - 4095	
1	Disp Dots		1248	0 - 4095	
2	H Back Porch		241	0 - 4095	
3	V Back Porch		30	0 - 4095	
4	Disp Line		702	0 - 4095	
5	Clamp		110	0 - 255	
6	Clamp Width		31	0 - 255	
22	(USB)H Back Porch		273	0 - 4095	
23	(USB)V Back Porch		35	0 - 4095	
25	(USB) Clamp		110	0 - 4095	
26	(USB)Clamp Width		31	0 - 4095	
Group 545	**RGB Video (720P - 50)**				
0	Total Dots		1980	0 - 4095	
1	Disp Dots		1216	0 - 4095	
2	H Back Porch		273	0 - 4095	
3	V Back Porch		30	0 - 4095	
4	Disp Line		702	0 - 4095	
5	Clamp		110	0 - 255	
6	Clamp Width		31	0 - 255	
22	(USB)H Back Porch		286	0 - 4095	
23	(USB)V Back Porch		35	0 - 4095	
25	(USB) Clamp		80	0 - 4095	
26	(USB)Clamp Width		31	0 - 4095	
Group 546	**RGB Video (1080i - 60)**				
0	Total Dots		2200	0 - 4095	
1	Disp Dots		1872	0 - 4095	
2	H Back Porch		221	0 - 4095	
3	V Back Porch		46	0 - 4095	
4	Disp Line		1052	0 - 4095	
5	Clamp		80	0 - 255	
6	Clamp Width		31	0 - 255	
22	(USB)H Back Porch		257	0 - 4095	
23	(USB)V Back Porch		53	0 - 4095	
25	(USB) Clamp		80	0 - 4095	
26	(USB)Clamp Width		31	0 - 4095	
Group 547	**RGB Video (1080i - 50)**				
0	Total Dots		2640	0 - 4095	
1	Disp Dots		1872	0 - 4095	
2	H Back Porch		221	0 - 4095	
3	V Back Porch		46	0 - 4095	
4	Disp Line		1052	0 - 4095	
5	Clamp		80	0 - 255	

Group/ Item	Item Name	Function	Initial	Range	Note
6	Clamp Width		31	0 - 255	
22	(USB)H Back Porch		258	0 - 4095	
23	(USB)V Back Porch		54	0 - 4095	
25	(USB) Clamp		80	0 - 4095	
26	(USB)Clamp Width		31	0 - 4095	
Group 548	**RGB Video (1035i)**				
0	Total Dots		2200	0 - 4095	
1	Disp Dots		1872	0 - 4095	
2	H Back Porch		177	0 - 4095	
3	V Back Porch		81	0 - 4095	
4	Disp Line		1012	0 - 4095	
5	Clamp		80	0 - 255	
6	Clamp Width		31	0 - 255	
22	(USB)H Back Porch		213	0 - 4095	
23	(USB)V Back Porch		90	0 - 4095	
25	(USB) Clamp		80	0 - 4095	
26	(USB)Clamp Width		31	0 - 4095	
Group 551	**RGB Video (1080p-30)**				
0	Total Dots		2200	0 - 4095	
1	Disp Dots		1874	0 - 4095	
2	H Back Porch		250	0 - 4095	
3	V Back Porch		55	0 - 4095	
4	Disp Line		1051	0 - 4095	
5	Clamp		80	0 - 255	
6	Clamp Width		31	0 - 255	
22	(USB)H Back Porch		250	0 - 4095	
23	(USB)V Back Porch		55	0 - 4095	
25	(USB) Clamp		32	0 - 4095	
26	(USB)Clamp Width		31	0 - 4095	
Group 552	**RGB Video (1080p-25)**				
0	Total Dots		2640	0 - 4095	
1	Disp Dots		1874	0 - 4095	
2	H Back Porch		250	0 - 4095	
3	V Back Porch		56	0 - 4095	
4	Disp Line		1051	0 - 4095	
5	Clamp		80	0 - 255	
6	Clamp Width		31	0 - 255	
22	(USB)H Back Porch		250	0 - 4095	
23	(USB)V Back Porch		56	0 - 4095	
25	(USB) Clamp		32	0 - 4095	
26	(USB)Clamp Width		31	0 - 4095	
Group 553	**RGB Video (1080p-24)**				
0	Total Dots		2750	0 - 4095	
1	Disp Dots		1874	0 - 4095	
2	H Back Porch		250	0 - 4095	
3	V Back Porch		56	0 - 4095	
4	Disp Line		1051	0 - 4095	
5	Clamp		80	0 - 255	
6	Clamp Width		31	0 - 255	
22	(USB)H Back Porch		250	0 - 4095	
23	(USB)V Back Porch		56	0 - 4095	
25	(USB) Clamp		32	0 - 4095	
26	(USB)Clamp Width		31	0 - 4095	
Group 555	**RGB Video (1080SF-30)**				
0	Total Dots		2200	0 - 4095	
1	Disp Dots		1875	0 - 4095	
2	H Back Porch		249	0 - 4095	
3	V Back Porch		90	0 - 4095	
4	Disp Line		1013	0 - 4095	
5	Clamp		80	0 - 255	
6	Clamp Width		31	0 - 255	

Group/ Item	Item Name	Function	Initial	Range	Note
22	(USB)H Back Porch		249	0 - 4095	
23	(USB)V Back Porch		90	0 - 4095	
25	(USB) Clamp		80	0 - 4095	
26	(USB)Clamp Width		31	0 - 4095	
Group 556	**RGB Video (1080SF-25)**				
0	Total Dots		2640	0 - 4095	
1	Disp Dots		1875	0 - 4095	
2	H Back Porch		249	0 - 4095	
3	V Back Porch		90	0 - 4095	
4	Disp Line		1013	0 - 4095	
5	Clamp		80	0 - 255	
6	Clamp Width		31	0 - 255	
22	(USB)H Back Porch		249	0 - 4095	
23	(USB)V Back Porch		90	0 - 4095	
25	(USB) Clamp		80	0 - 4095	
26	(USB)Clamp Width		31	0 - 4095	
Group 557	**RGB Video (1080PSF-24)**				
0	Total Dots		2750	0 - 4095	
1	Disp Dots		1888	0 - 4095	
2	H Back Porch		145	0 - 4095	
3	V Back Porch		47	0 - 4095	
4	Disp Line		1063	0 - 4095	
5	Clamp		80	0 - 255	
6	Clamp Width		31	0 - 255	
22	(USB)H Back Porch		181	0 - 4095	
23	(USB)V Back Porch		51	0 - 4095	
25	(USB) Clamp		80	0 - 4095	
26	(USB)Clamp Width		31	0 - 4095	

Chassis over view

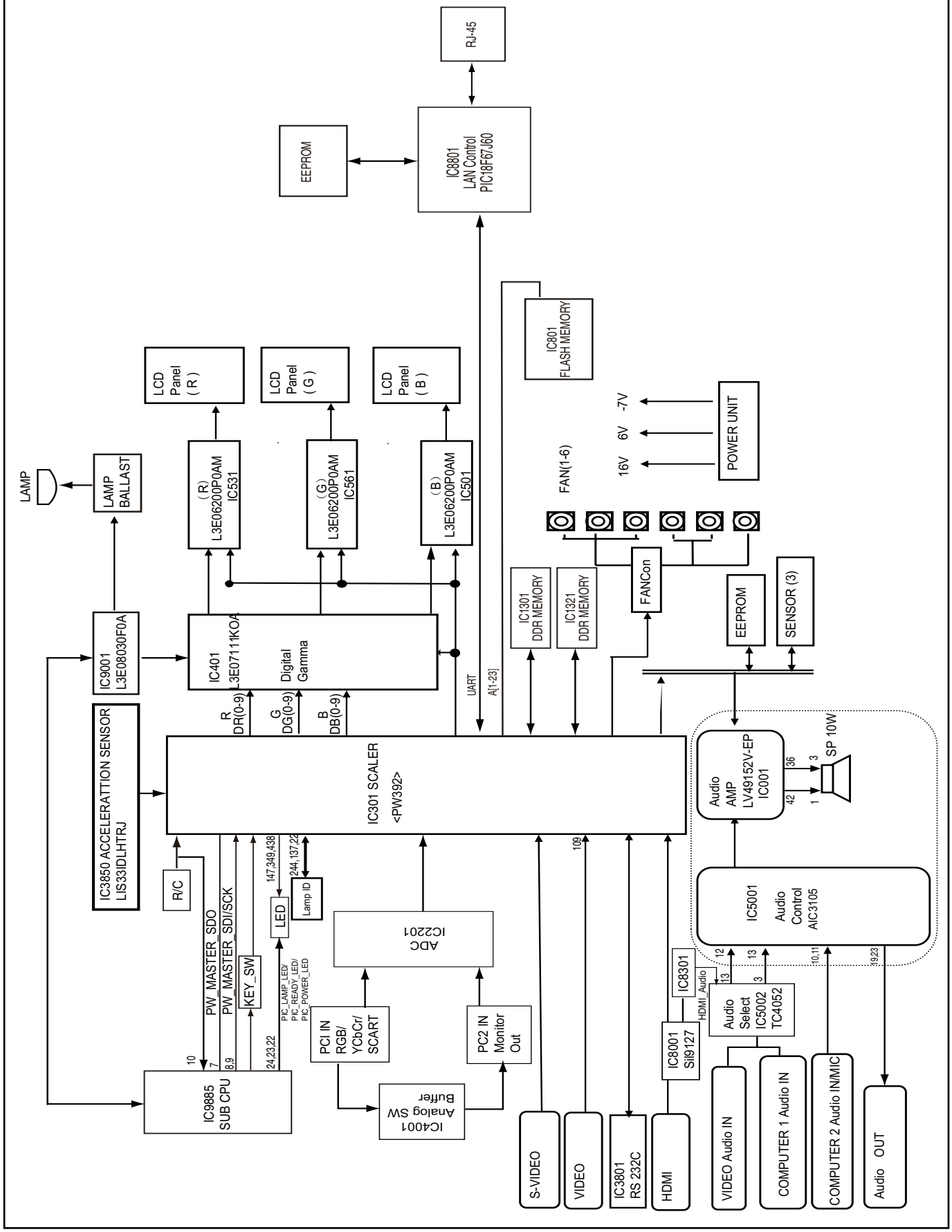

System control

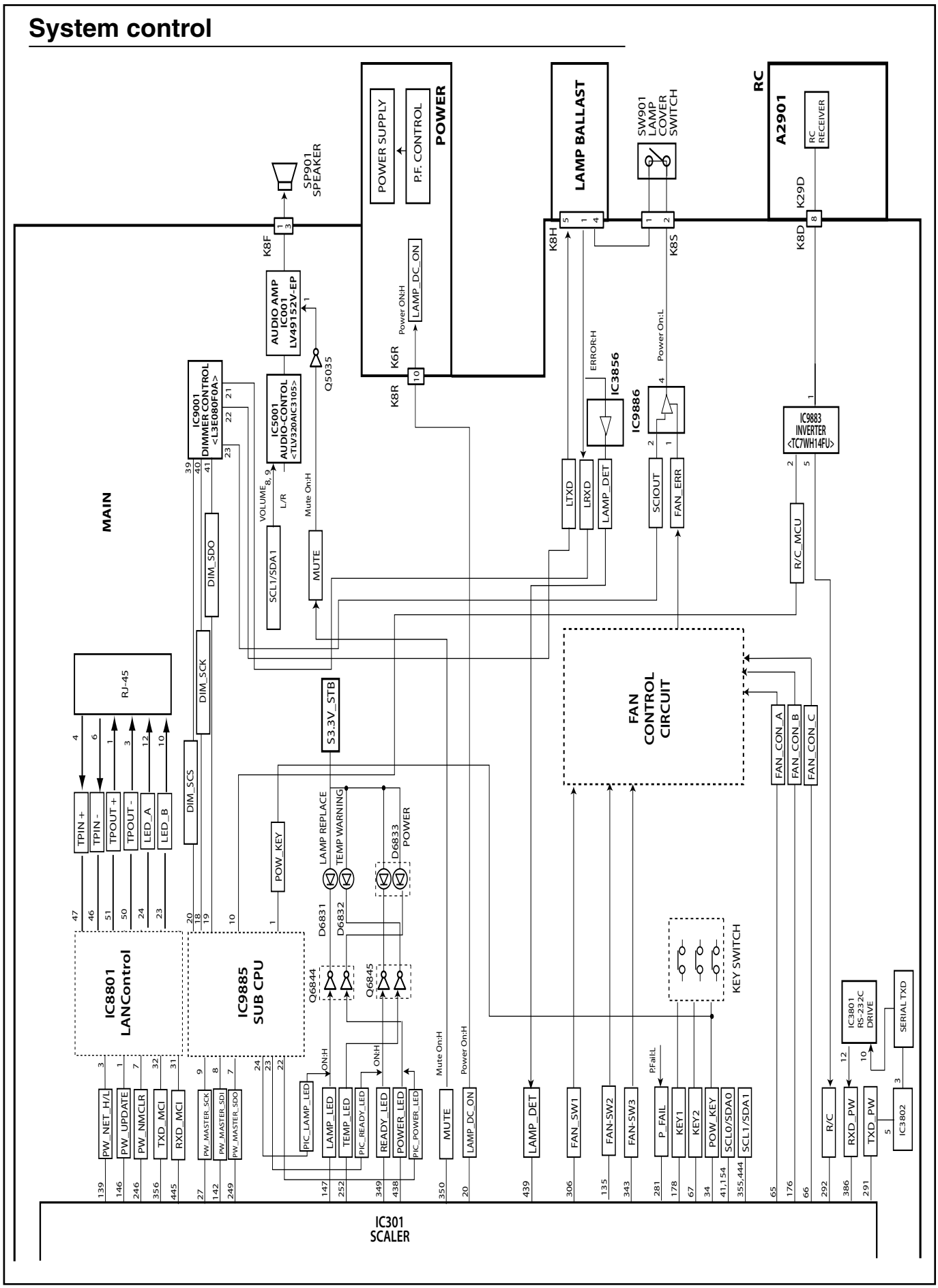

Lamp control

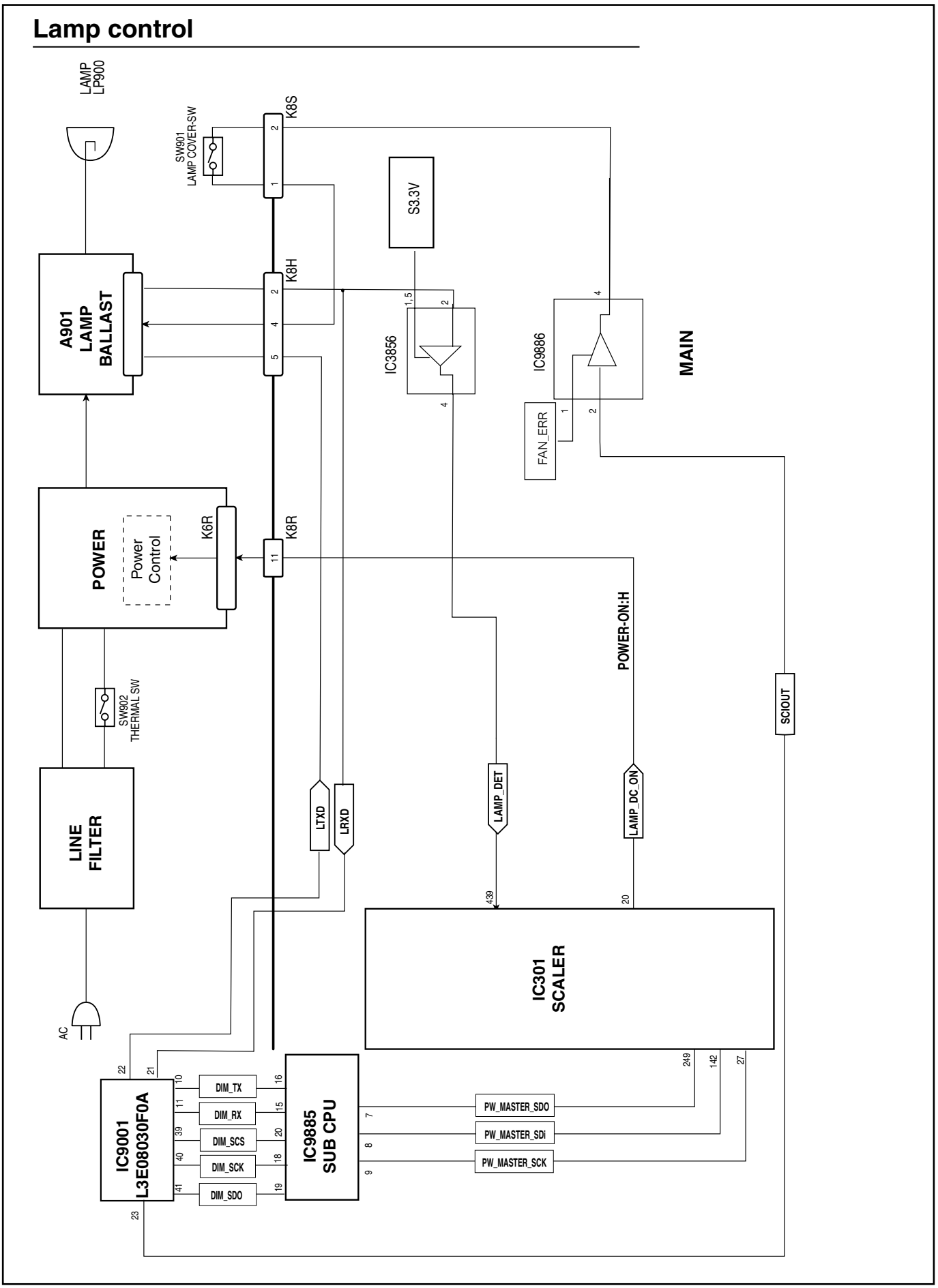

Audio circuit

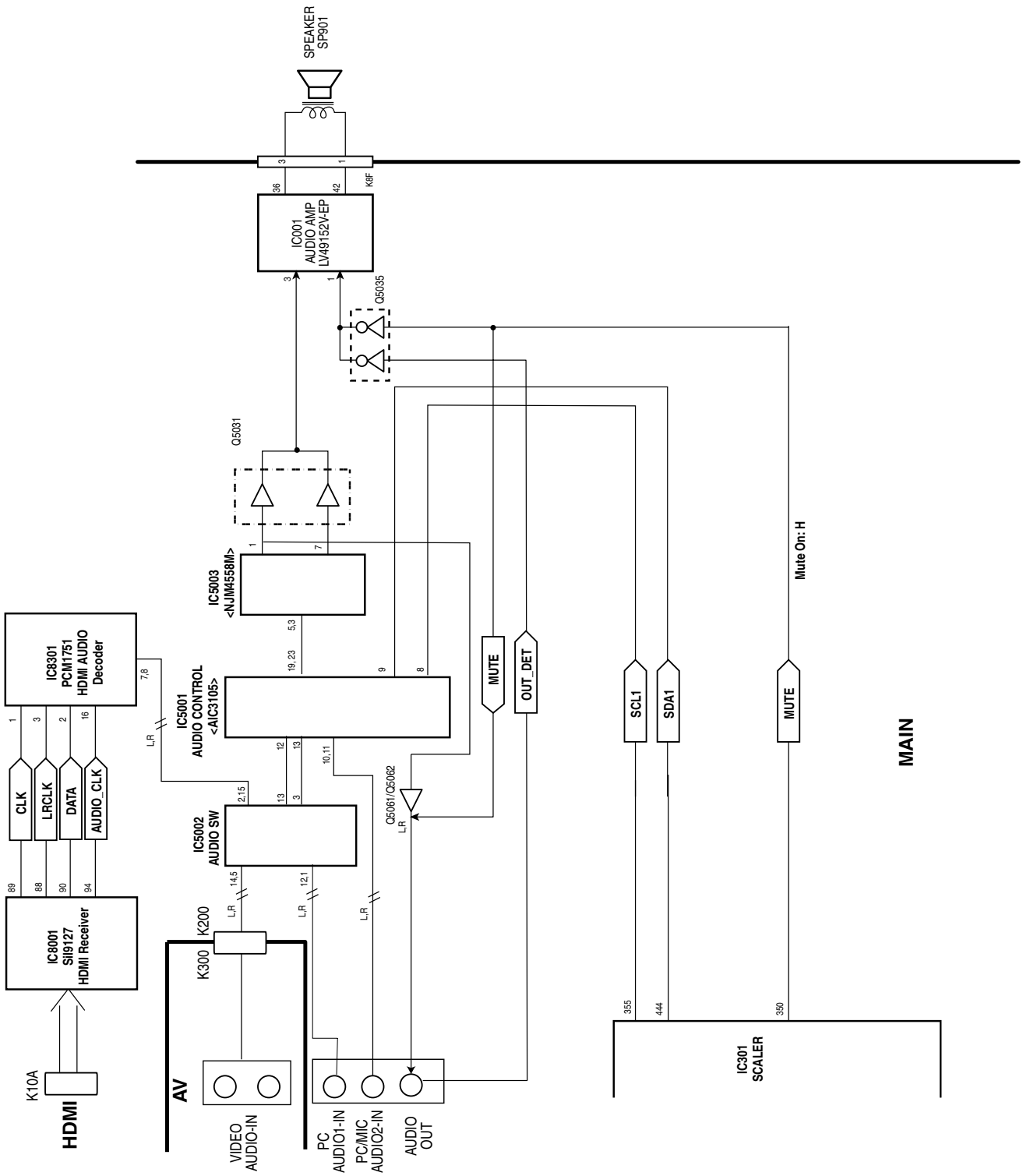

Power supply & protection circuit

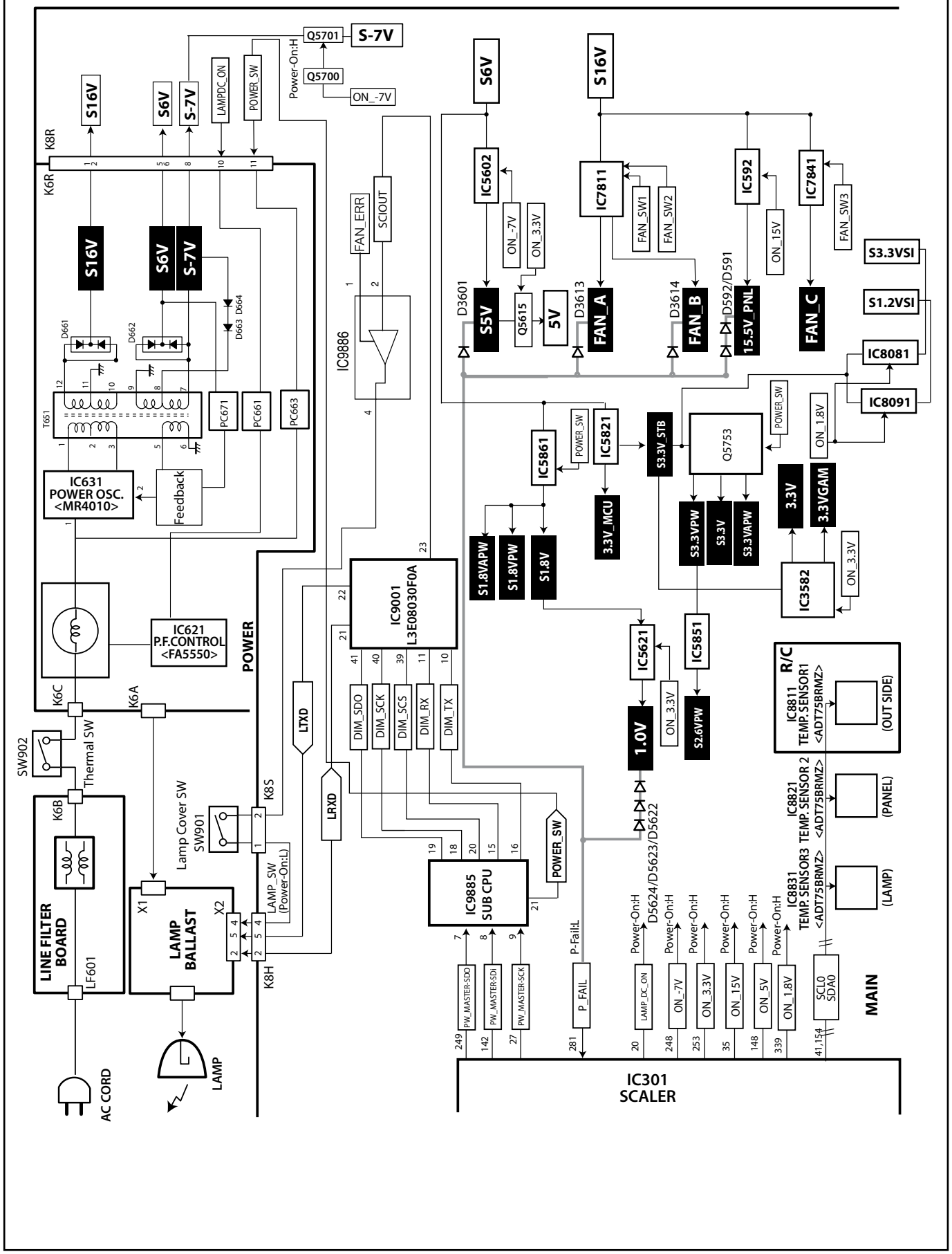

Fan control circuit

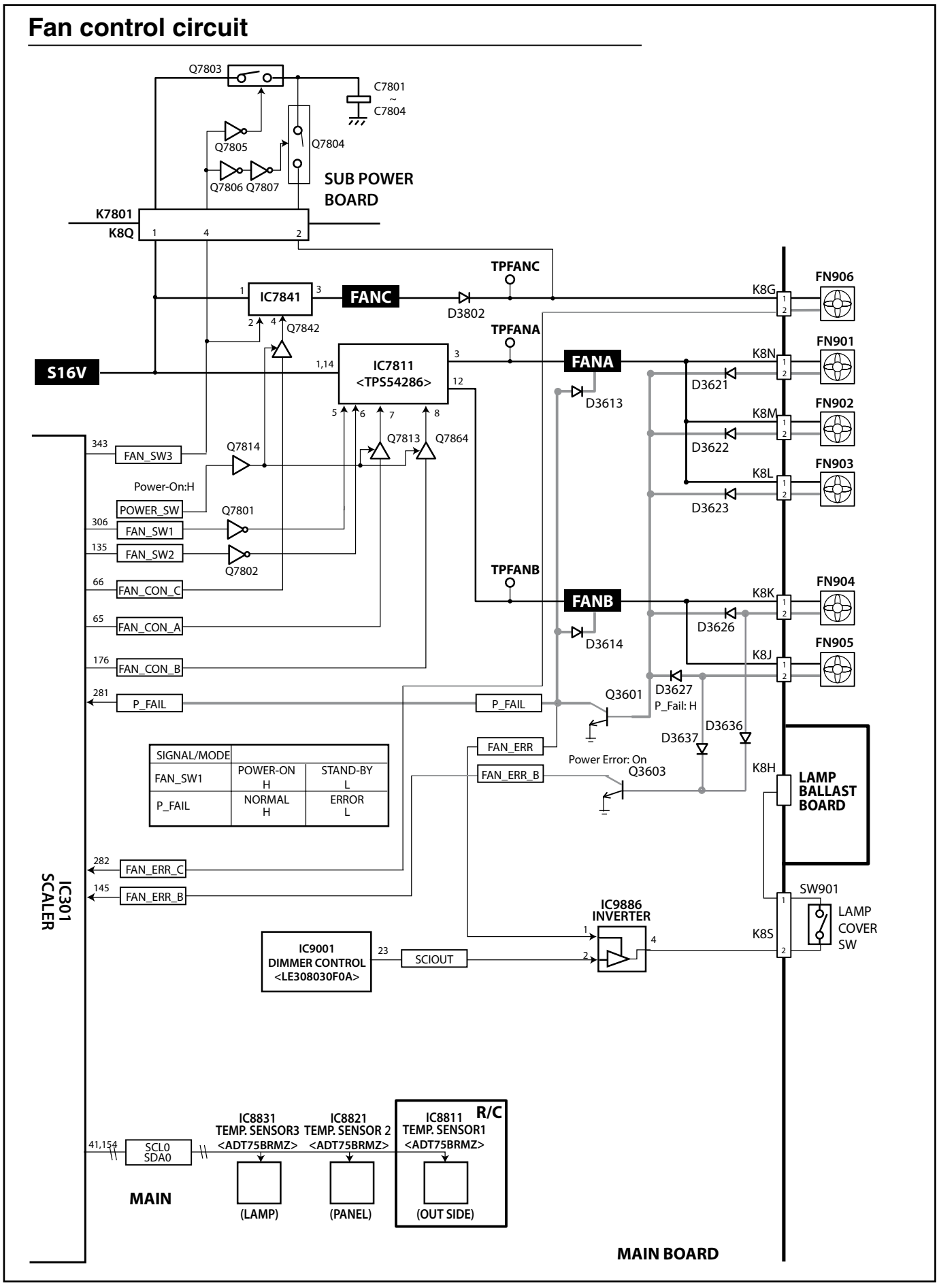

SIGNAL/MODE		
FAN_SW1	POWER-ON H	STAND-BY L
P_FAIL	NORMAL H	ERROR L

Indicators and Projector Condition

Check the indicators for projector condition.

Indicators			Projector Condition
POWER red/green	WARNING red	LAMP REPLACE yellow	
●	●	●	The projector is off. (The AC power cord is unplugged.)
◍	●	✻	The projector is in stand-by mode. Press the ON/STAND-BY button to turn on the projector.
○	●	✻	The projector is operating normally.
◍ (blinking)	●	✻	The projector is preparing for stand-by or the projection lamp is being cooled down. The projector cannot be turned on until cooling is completed and the POWER indicator stops blinking.
○ (blinking)	●	✻	The projector is in the Power management mode.
◍ (blinking)	◍ (blinking)	✻	The temperature inside the projector is abnormally high. The projector cannot be turned on. When the projector is cooled down enough and the temperature returns to normal, the POWER indicator stops blinking and the projector can be turned on. (The WARNING indicator keeps blinking.)
◍	◍ (blinking)	✻	The projector has been cooled down enough and the temperature returns to normal. When turning on the projector, the WARNING indicator stops blinking.
●	◍	✻	The projector detects an abnormal condition and cannot be turned on. Unplug the AC power cord and plug it again to turn on the projector. If the projector is turned off again, unplug the AC power cord and contact the dealer or the service center for service and checkup. Do not leave the projector on. It may cause an electric shock or a fire hazard.

○ • • • green. ◍ • • • red ● • • • off

○ (blinking) • • • blinks green. ◍ (blinking) • • • blinks red.

✻ When the projection lamp reaches its end of life, the LAMP REPLACE indicator lights yellow. When this indicator lights yellow, replace the projection lamp with a new one promptly.

No Power

This projector provides a function which can be specified a defective area simply by indicating the LEDs. Connect the AC cord and press the ON/STAND-BY button once and then check the LED indication.

- **When all of LED indicators are not lighting**, the symptom indicates that the primary power supply circuit does not operate properly. Check the primary power circuit and parts as follow;
  AC cord, F601 (Fuse), Power board,
  SW902 (Thermal sw) short in normal
  SW902 opens when the surrounding temperature of the switch exceeds 115°C.

- **When the WARNING (red) and POWER (red) indicators are flashing**, the symptom indicates that the projector detected an abnormal temperature risen inside the projector. Check the air filters and remove the object near the intake and exhaust fan openings, and wait until the POWER indicator stops flashing, and then try to turn on the projector.
  The internal temperature is monitored by sensor ICs, IC8831, IC8821 on the Main board and IC8811 on the R/C board.

- **When the WARNING indicator lights red**, the symptom indicates that the projector detected an abnormality in the cooling fan operation or in the power supply secondary circuits. Check fan operation and power supply lines, and the driving signal status.
  The P_FAIL signal (Error: L), FAN_ERR_B signal (Error: L), FAN_ERR_C (Error: H) are sent to pins, 281, 145, and 282 of IC301 <SYSTEM CONTROL> respectively when the abnormality occurred inside the projector, and then the IC301 sends the shutdown signal, LAMP_DC_ON, to the power supply circuit to stop its operation, and signal SCIOUT to the lamp ballast board via IC9886 and SW901<lamp cover switch> to stop operation of the lamp circuit.
  An abnormality occurs on the secondary power supply;
  Check power supplies S16V, S6V, S-7V. P_FAIL signal becomes Low when the abnormality occurs on any of the power supply lines.
  An abnormality occurs on the fan control circuit;
  If fans FN901, FN902 or FN903 has an error, the FAN_ERR and P_FAIL signals become "L". If fans FN904 or FN905 has an error, the FAN_ERR, P_FAIL and FAN_ERR_B signals become "L". If fan FN906 has an error, the FAN_ERR_C signal becomes "H", The FAN_ERR signal cut off the SCIOUT signal which is supplied to the lamp ballast board if the FAN_ERR signal is "L".
  An abnormality occurs on the drive signals;
  ON_15V signal (Power-on: H) is output from pin 35 of IC301 and switches IC592,15.5VL supply circuit, ON_3.3V signal (Power-on: H) is output from pin 253 of IC301 and switches IC5621 - 1.0V, IC3852 - 3.3V supply circuits.
  LAMP_DC_ON signal (Power-on: H) is output from pin 20 of IC301 and supplied to the PFC Control IC, IC621, on the power supply board.
  SCIOUT signal (Power-on: H) is output from pin 23 of IC9001 and applied to pin 2 of IC9886 and output pin 4 and then supplied to the lamp ballast board through SW901<Lamp Cover SW>.
  LAMP_DET signal at the pin 439 of IC301 is applied from the lamp ballast unit. If the abnormality occurred on the lamp ballast unit, LAMP_DET signal becomes “High” and then IC301 shuts down the power supply circuit.

Lamp Cover switch

Make sure that the lamp cover is mounted correctly. If not or the lamp cover removed, the lamp does not light on for the safety. Check the lamp cover and lamp cover switch (SW901).

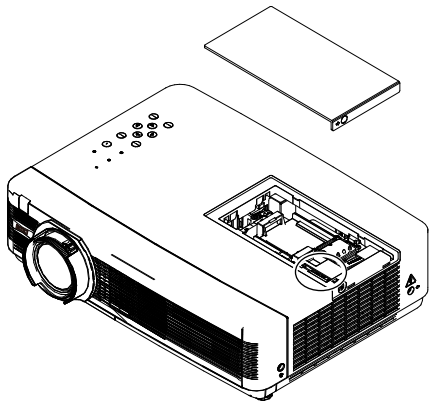

No Picture

Check following steps.

No picture with all of input sources

Yes →

Check signal processing stage and LCD driving stage;
Check RGB S&H signals at test points TP35B, TP35G, TP35R.
Check power supply circuit 15.5V_PNL and peripheral circuit.
Check ICs IC501, IC531, IC561, IC401, IC301 and peripheral circuits.

No ↓

No picture with PC1 input source only

Yes →

Check IC301<Scaler>, IC2201<A/D>, IC5301<HV Sync SW> and peripheral circuit.
R1, G1, B1 signals are applied at pins 7, 12, 19, and HS1, VS1 signals are applied at pins 33, 44 of IC2201<A/D>
R1, G1, B1 signals are applied at pins 214, 106, 215 and HS1, VS1 signals are applied at pins 98, 399 of IC301.

No ↓

No picture with PC2 input source only

Yes →

Check IC301<Scaler>, IC2201<A/D>, IC5301<HV Sync SW> and peripheral circuit.
R2, G2, B2 signals are applied at pins 22, 24, 28, and HS2, VS2 signals are applied at pins 34, 45 of IC2201<A/D>
R2, G2, B2 signals are applied at pins 101, 103, 212 and HS2, VS2 signals are applied at pins 400, 97 of IC301.

No ↓

No picture with all of computer input sources

Yes →

Check PC/AV source selecting stage and processing stage;
Check IC301<Scaler> and peripheral circuit.

No ↓

No picture with video input sources

Yes →

Check AV source selecting and decoding stage;
S-Video source
Check S-video signal (Y/C).
S_CHROMA signal is applied to pin 108 of IC301<Scaler>, and S-Y signal is applied on pin 318 of IC301.
Composite video source
Check composite video signal (Video).
The composite video signal is applied to pins 109 of IC301 <Scaler>.

No ↓

No picture with HDMI input sources

→

Check IC8001 <HDMI driver> , IC301<Scaler> and the peripheral circuits.

No Sound

Check following steps.

Check if the audio signal is observed at pins 19 and 23 of IC5001.

No →

Check IC5001 and peripheral circuit.
Check the Pins 7 and 32 of IC5001, the voltage is respectively S3.3V and S1.8V.
Check IC5002<Audio SW> and peripheral circuit.
Video: Pin 9: L, Pin 10: H
PC1: Pin 9: L, Pin 10: L
HDMI: Pin 9: H, Pin 10: L

Yes ↓

Check if the audio signal is observed at pins 1 and 7 of IC5003.

No →

Check IC5003 and peripheral circuit.
Check S-7V at pin 4 of IC5003 and S5V at pin 8 of IC5003 power supply.

Yes ↓

Check if the audio signal is observed at pins 36 and 42 of IC001.

No →

Check IC001 and peripheral circuit.
Check the Mute signal at pin 1 of IC001. The Mute signal is output from pin 350 of IC 301<Scaler>. The OUT_DET signal is sent from Audio Out terminal.
Mute-On: H at pin 350 of IC301, L at pin 1 of IC001.
Check the AMP-STBY signal at pin 2 of IC001. The AMP-STBY signal is output from pin 345 of IC301.
AMP-STBY signal: H at normal, L: Mute-on

Yes ↓

Check audio output circuit.
Check speaker, connection of the terminal “K8F”.

Control Port Functions

Scaler I/O Port Functions (PW392)

PIN NO.	PORT NO.	PORT NAME	FUNCTION	SIGNAL NAME	DESCRIPTION	I/O
145	C29	PortA6		FAN_ERR_B	FAN B error alarm	I
33	D30	PortA4		SCS_SUB		
146	D29	PortA3		PW_UPDATE	NET UPDATE FLAG	O
34	E30	PortB7		POW_KEY	POW KEY	I
147	E29	PortB6		LAMP_LED	LAMP LED DRIVER ON:H	O
252	E28	PortB5		TEMP_LED	TEMP LED DRIVER ON:H	O
349	E27	PortB4		READY_LED	READY LED DRIVER ON:H	O
438	E26	PortB3		POWER_LED	POWER LED DRIVER ON:H	O
35	F30	PortB2		ON_15V	15V POWER SWITCH ON:H	O
148	F29	PortB1		ON_5V	5V POWER SWITCH ON:H	O
253	F28	PortB0		ON_3.3V	3.3V POWER SWITCH ON:H	O
350	F27	PortC7		MUTE	SOUND MUTE DRIVER	O
389	F26	PortC6		LAMP_DET	LAMP POWER DETECTION	I
36	G30	PortC5		S_SW	S_VIDEO INPUT SWITCH	I
149	G29	PortC4		DDC_SW1	DDC WIRE SWITCH	O
254	G28	PortC3		MONIT_OUT	PC2 OUTPUT SWITCH	O
351	G27	PortC2		SDATA_PW	3 WIRE SERIAL CONTROL DATA	O
440	G26	PortC1		SCS_PW	3 WIRE SERIAL CONTROL SELECT	O
306	AB3	PortD7		FAN_SW1	FAN SWITCH	O
135	B20	PortD6		FAN_SW2	FAN SWITCH	O
20	A20	PortD5		LAMP_DC_ON	LAMP POWER SWITCH ON:H	O
340	D19	PortD4		IRM_RST	RESET RGB COMMON	O
241	C19	PortD3		SIRST	SII9127 RESET	O
134	B19	PortD2		PW_NMCLR	NET RESET	O
19	A19	PortD1		SISCDT		I
339	D18	PortD0		ON_1.8V	1.8V POWER SWICTH ON:H	O
248	C26	PortE7		ON_-7V	S-7V POWER SWITCH ON:H	O
27	A27	PortE6		PW_MASTER_SCK	SUB CPU COMMUNICATION	I
142	B27	PortE5		PW_MASTER_SDI	SUB CPU COMMUNICATION	I
249	C27	PortE3		PW_MASTER_SDO	SUB CPU COMMUNICATION	O
139	B24	PortF7		PW_NET_H/L	NET STATE	O
345	D24	PortF5		AMP_STBY		O
247	C25	PortF2		AUDIO_SEL1		O
346	D25	PortF1		MIC_OFF	MIC Control, MIC On:H	O
437	E25	PortF0		AUDIO_SEL2		O
342	D21	PortG7		RST_DB	DB IC9001 RESET	O
22	A22	PortG6		PW_LAMP_ID_C	LAMP_ID_DATA	I
137	B22	PortG5		PW_LAMP_ID_B	LAMP_ID_DATA	I
244	C22	PortG4		PW_LAMP_ID_A	LAMP_ID_DATA	I
343	D22	PortG3		FAN_SW3	FAN SWITCH	O
138	B23	PortG1		ID_PWR_SW	LAMP_ID_POWER_SWITCH	O
245	C23	PortG0		RESET_MIC		O
154	M29	PortH7		SDA0	IIC Bus Temp Sensor [S3.3V]	O
41	M30	PortH6		SCL0	IIC Bus Control Clock	O
258	L28	PortH5		EEPROM-SDA		I
153	L29	PortH4		EEPROM-SCL		I
444	L26	PortH3		SDA1	IIC Bus Control Data	O
355	L27	PortH2		SCL1	IIC Bus Control Clock	O
291	AH12	PortH1	PW_EX_UART	PW_TXD		O
386	AG12	PortH0		PW_RXD		I
293	AH10	PortI6		PW_CEA_C		O
441	H26	PortI5		PC1_L_OFF		O
356	M27	PortJ7		TXD_MCI		O
445	M26	PortJ6		RXD_MCI		I
40	L30	PortJ0		CEC_D	.	O
67	AK22	ADC0		KEY2	KEY2	O
178	AJ22	ADC1		KEY1	KEY1	O
281	AH22	ADC2		P_FAIL	POWER PROTECTION	I

Control Port Functions

PIN NO.	PORT NO.	PORT NAME	FUNCTION	SIGNAL NAME	DESCRIPTION	I/O
179	AJ21	ADC4		P_FAIL_FAN	FAN POWER PROTECTION	I
282	AH21	ADC5		FAN_ERR_C	FAN C error alarm	I
65	AK24	DAC0		FAN_CON_A	FAN CON_A	O
176	AJ24	DAC1		FAN_CON_B	FAN CON_B	O
66	AK23	DAC2		FAN_CON_C	FAN CON_C	O
475	AF10	EXTINT0		SIINT		I
292	AH11	IRRCVR0		R/C		I
294	AH9	IRRCVR2		SWNMI301	.	I

IC Block Diagrams

● FA5550NG <P.F. Control, IC621>

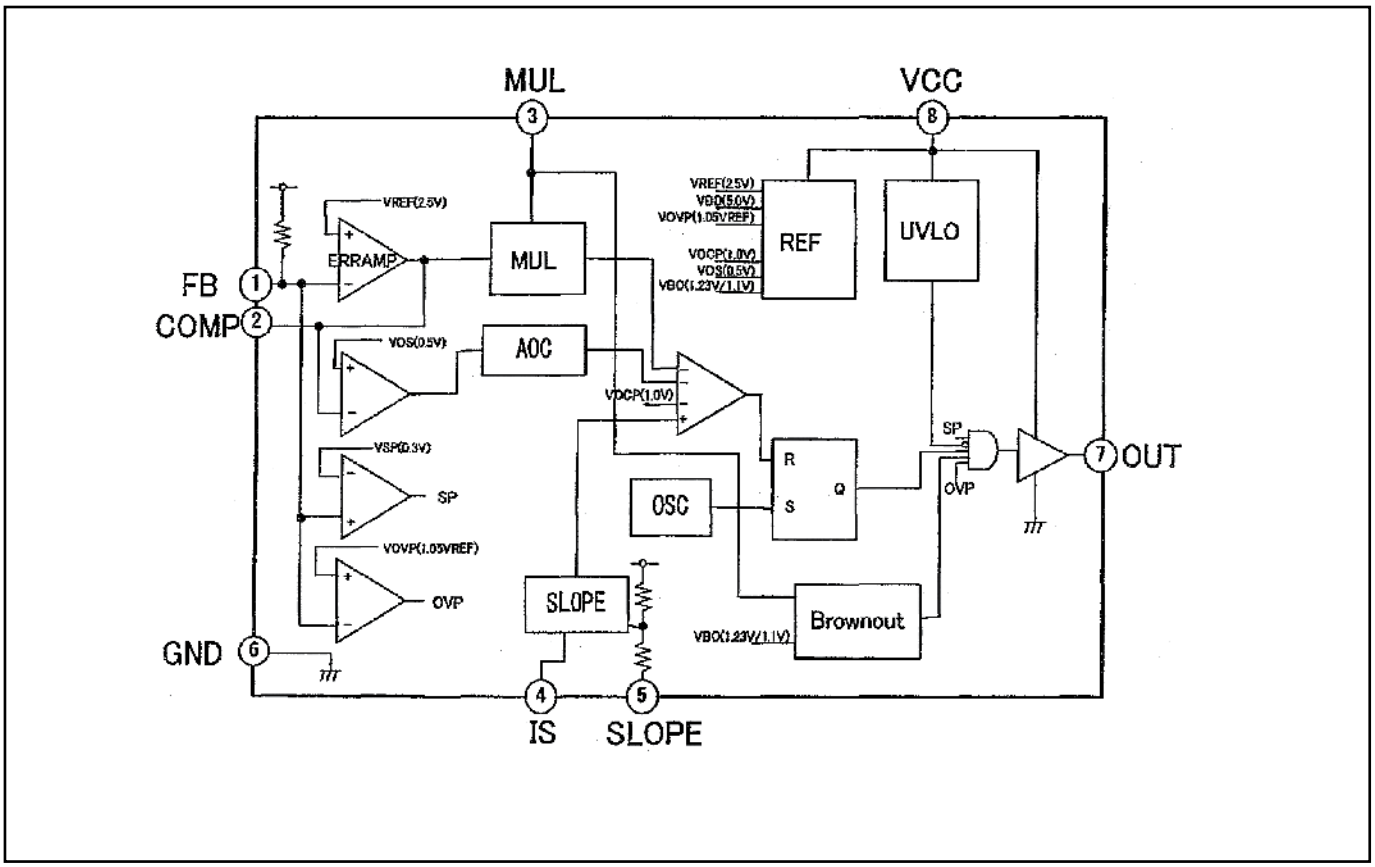

● LC87F2G08AUSSOP <SUB CPU, IC9885>

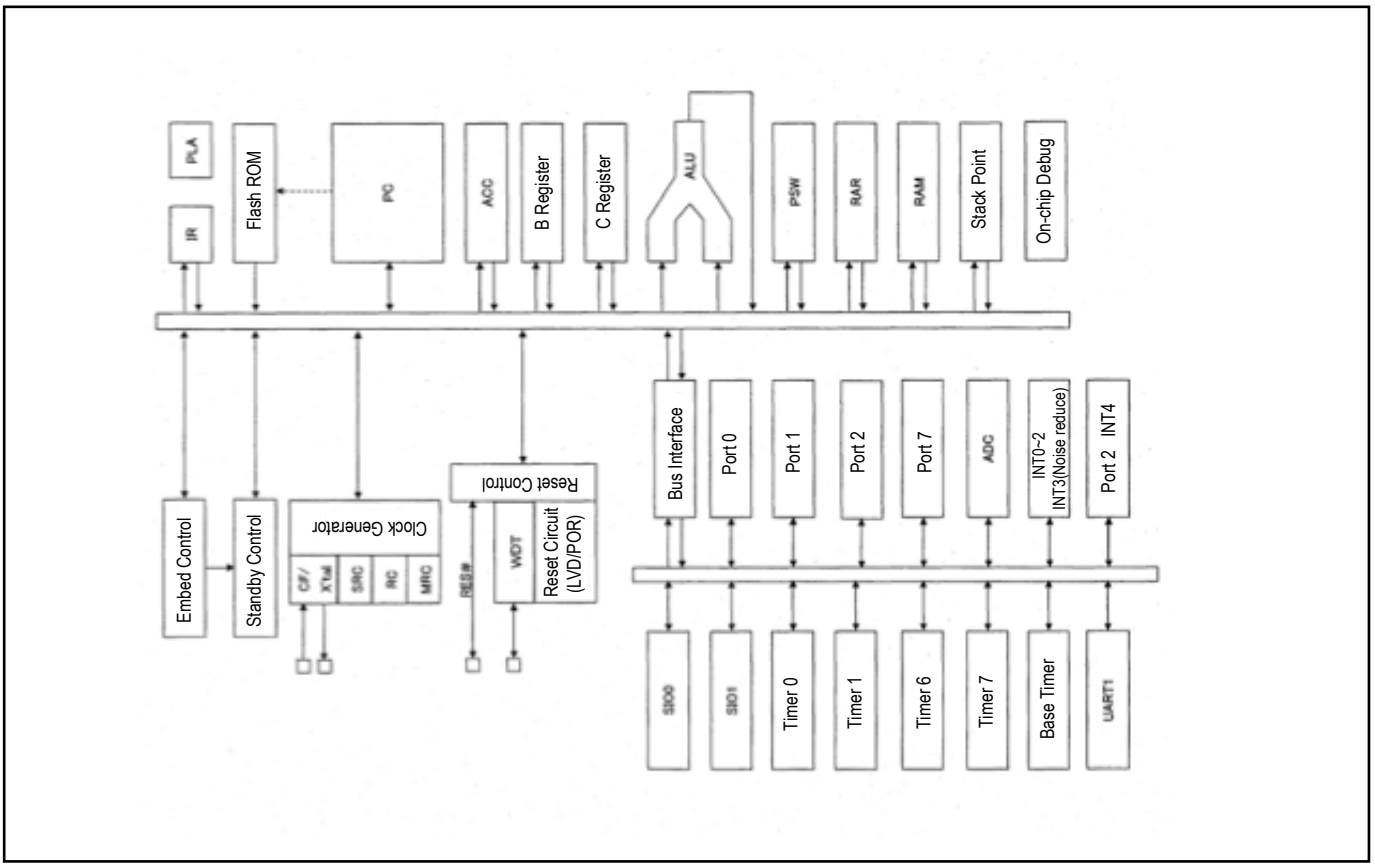

● SP3232ECYP <RS-232C Driver, IC3801>

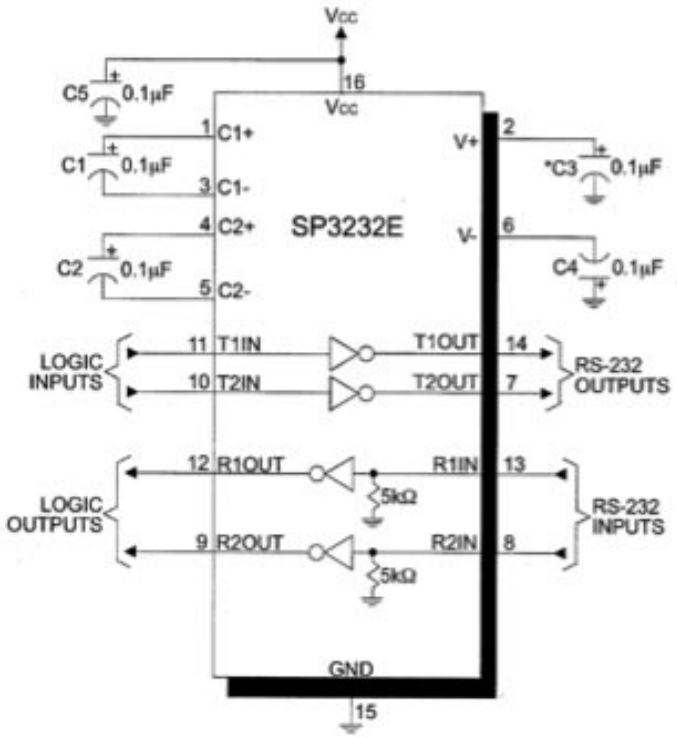

● L3E06200P0A<D/A, S/H-LCD Driver, IC501, IC531, IC561>

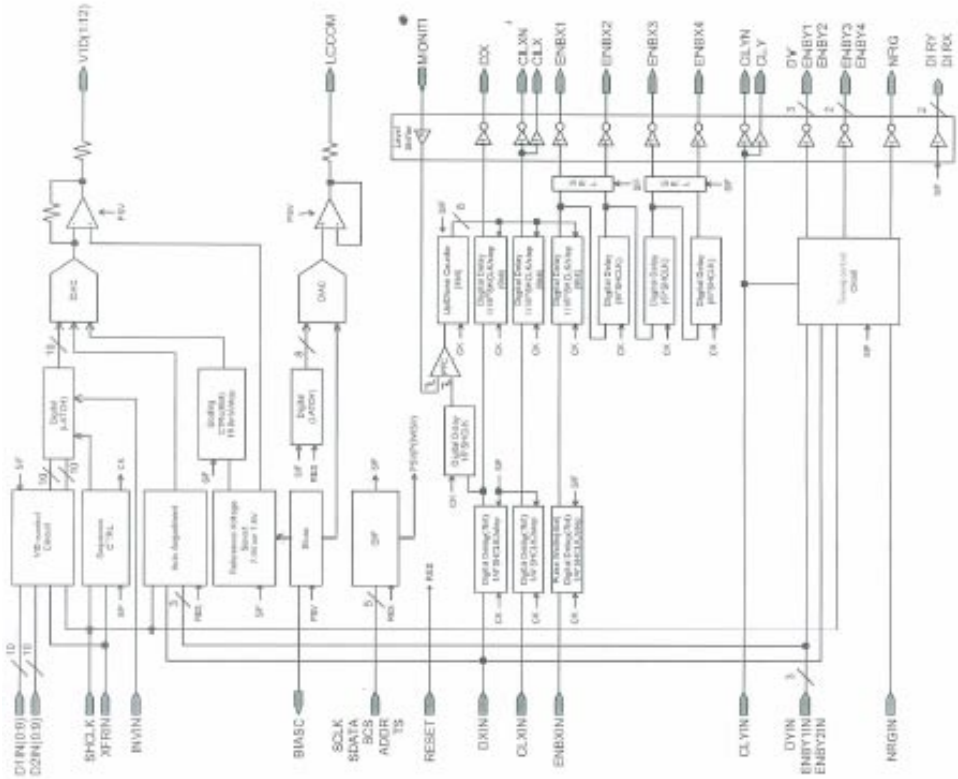

● L3E07111 <Digital Gamma Correction, IC401>

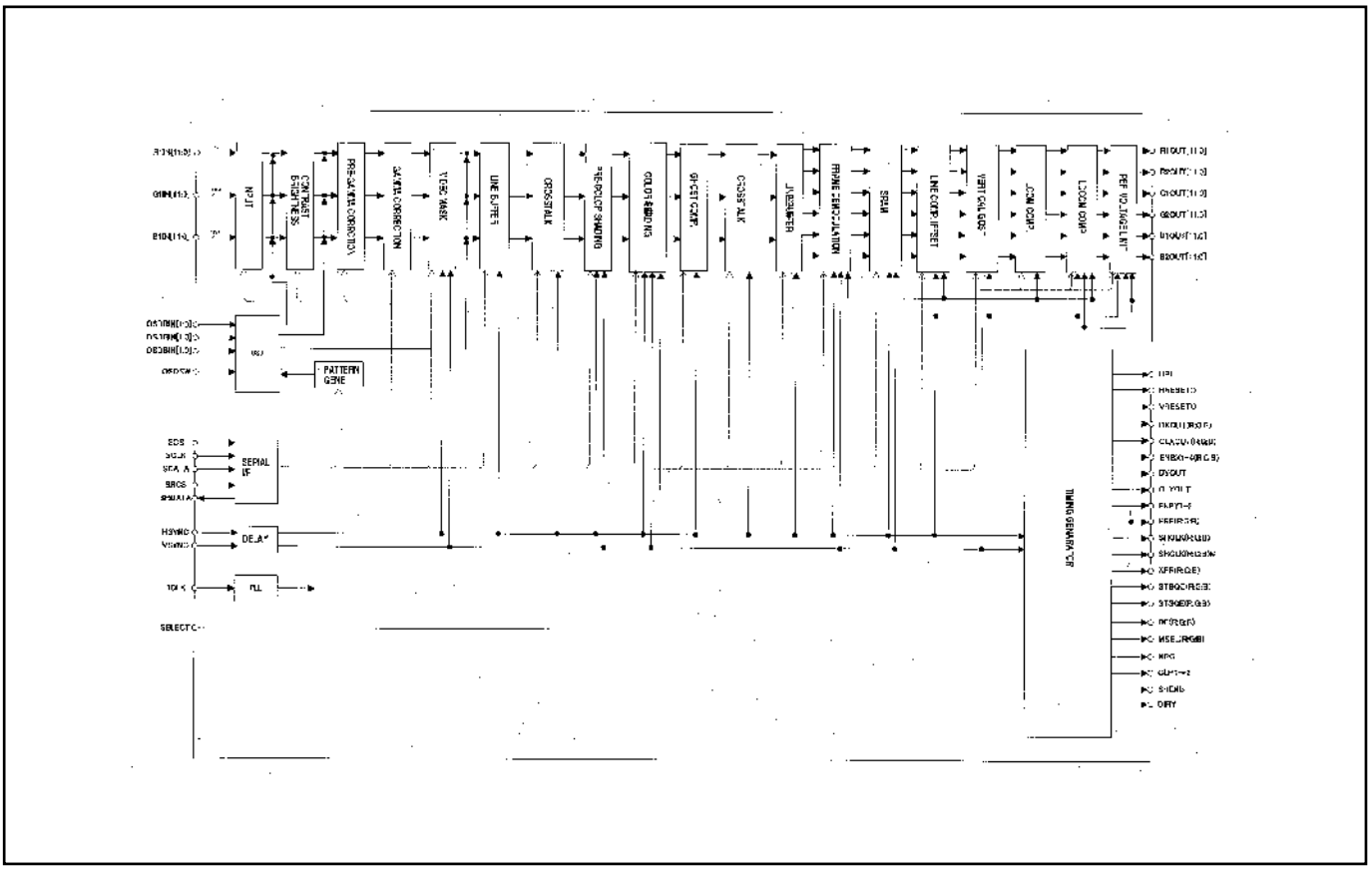

● TLV320AIC3105 <Audio Control, IC5001>

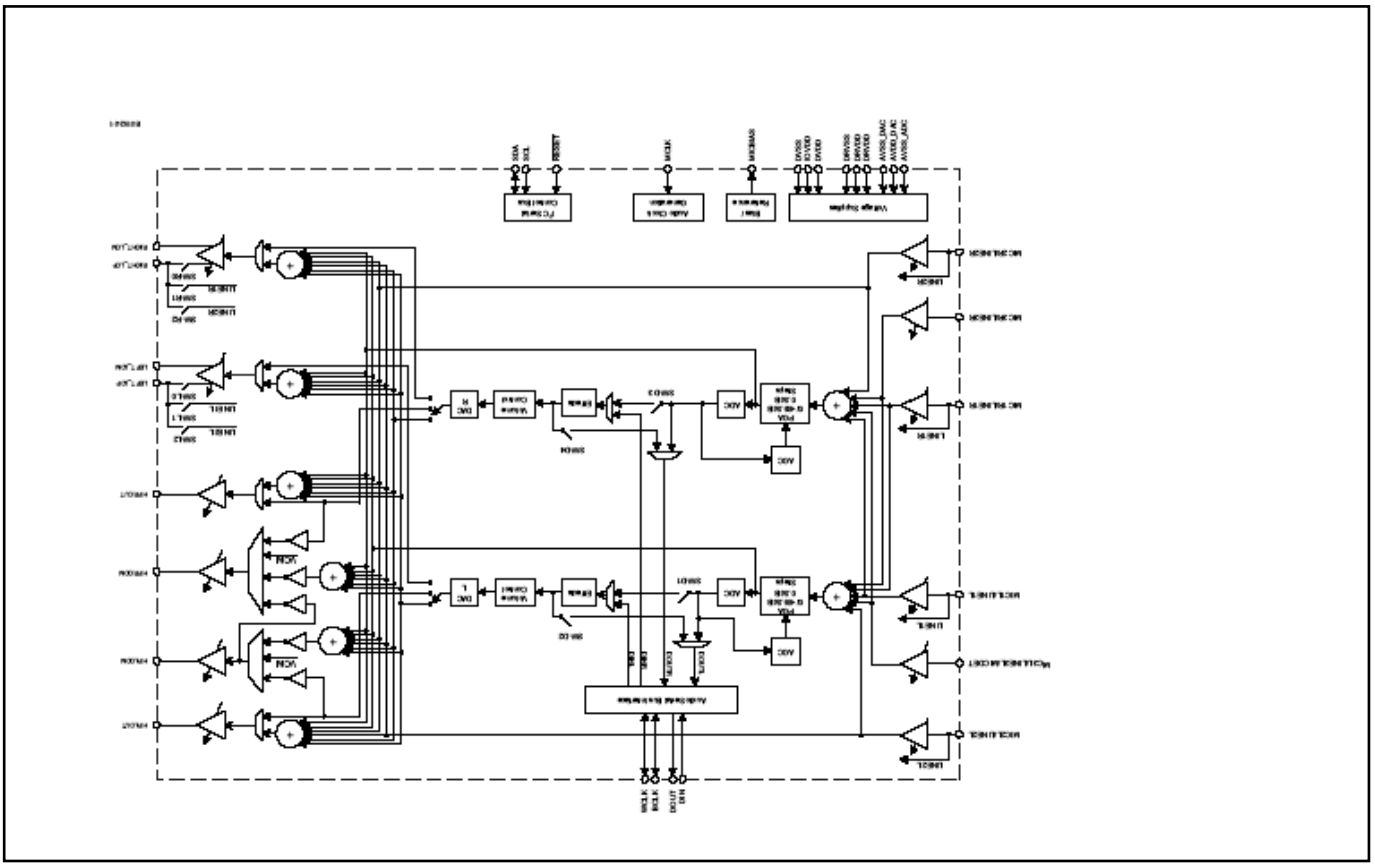

● PW392 <Scaler, IC301>

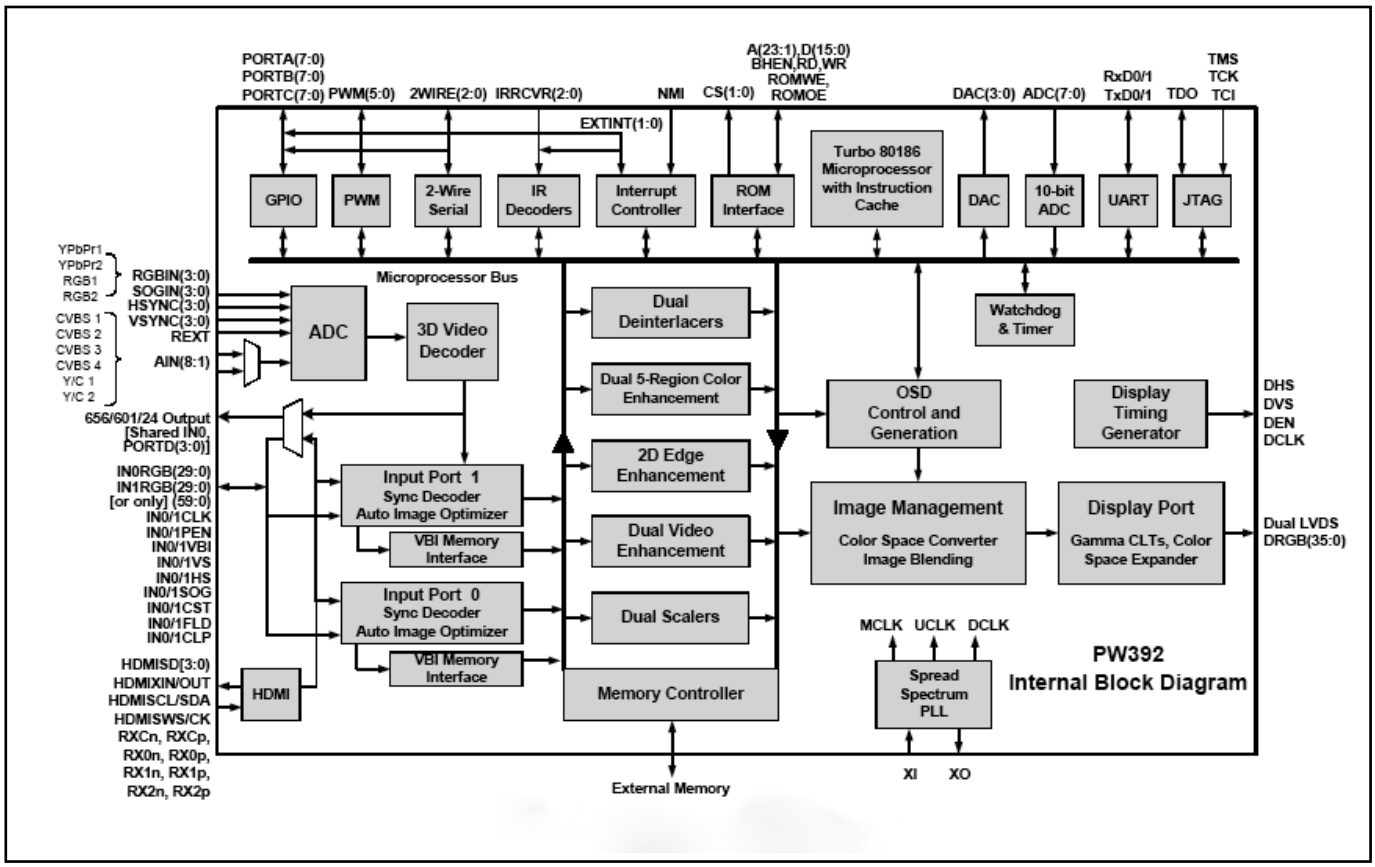

● L3E08030F0A <Dimmer Control, IC9001>

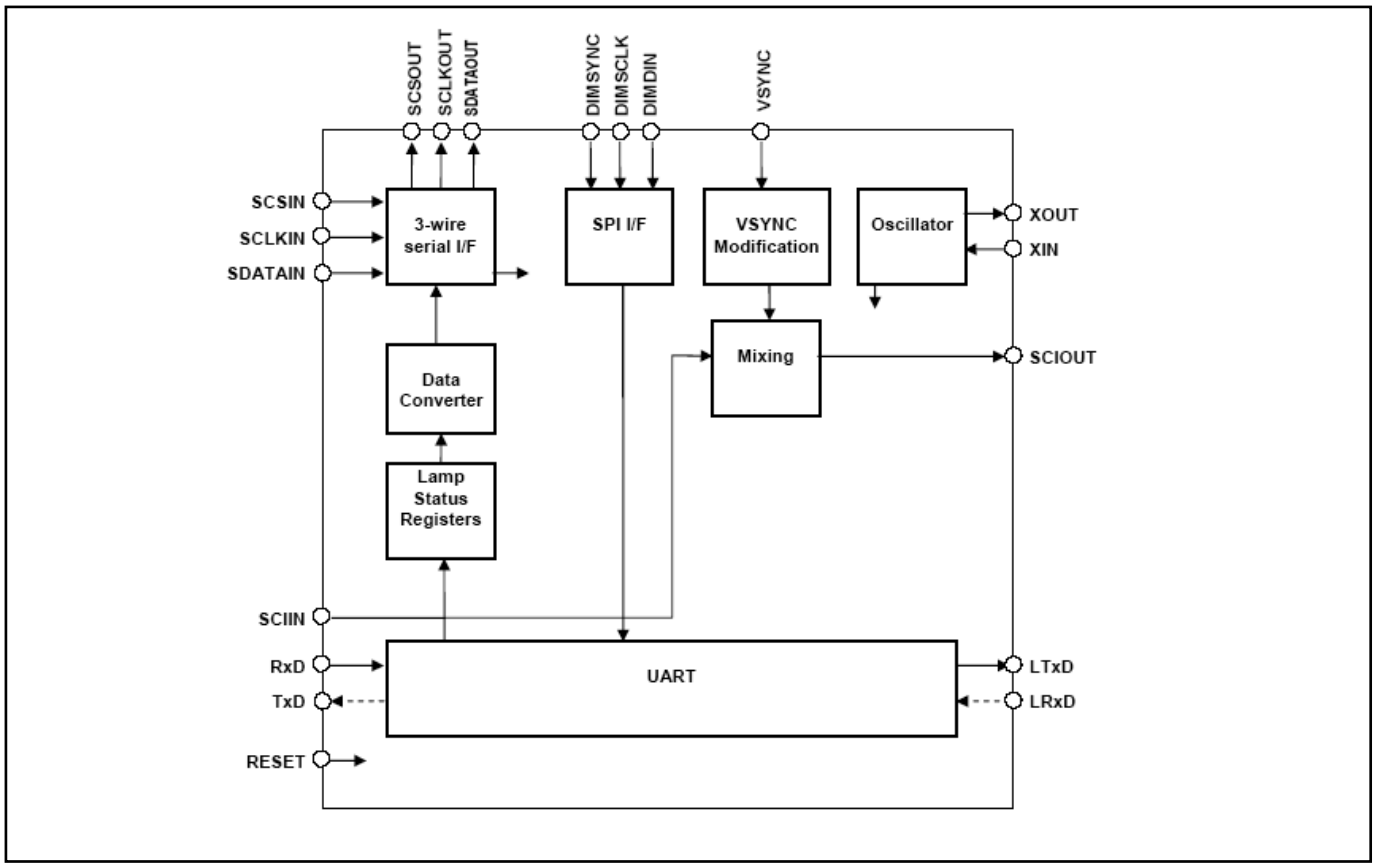

● MR4010 <Power OSC, IC631>

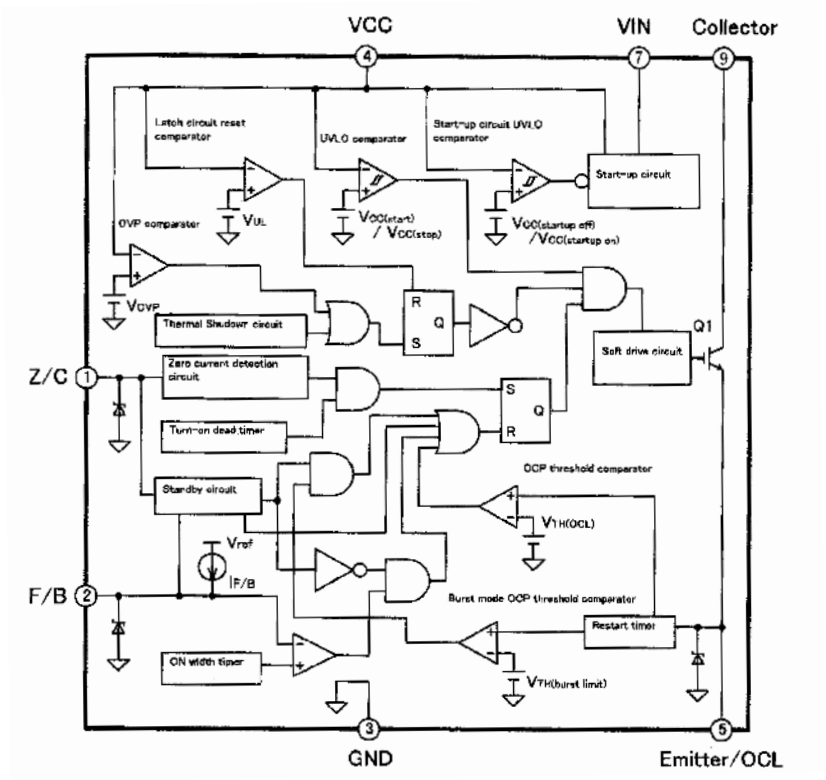

● PIC18F67J60<LAN CONTROL,IC8801>

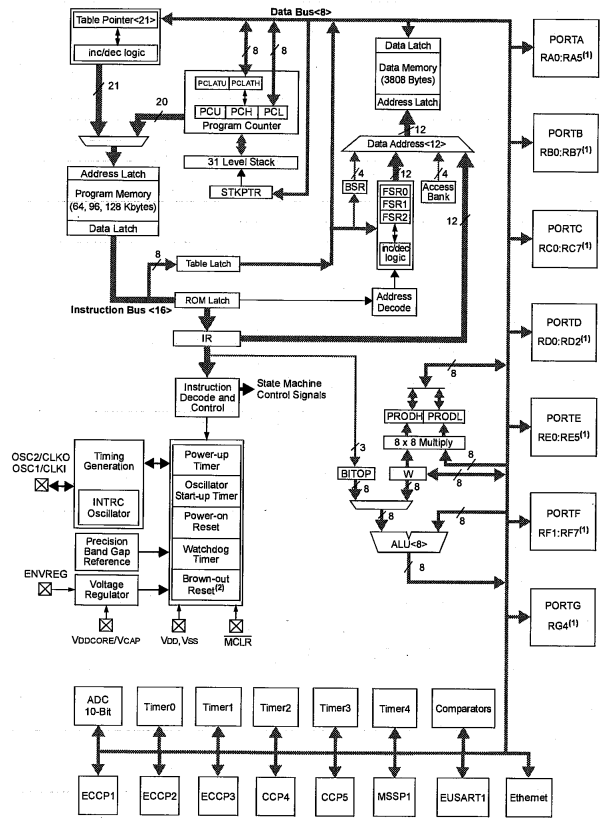

● TPS54286 <DC-DC Converter, IC7811>

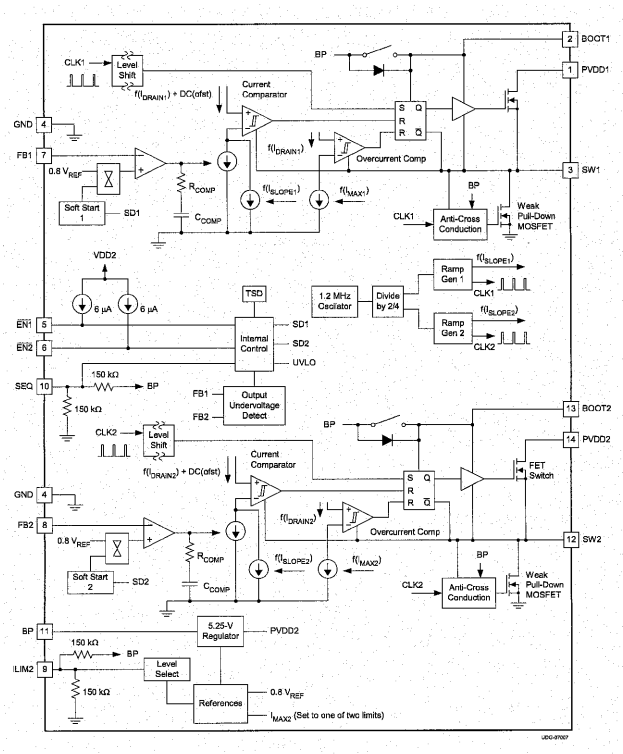

● SIL9127 <HDMI RECEIVER, IC8001>

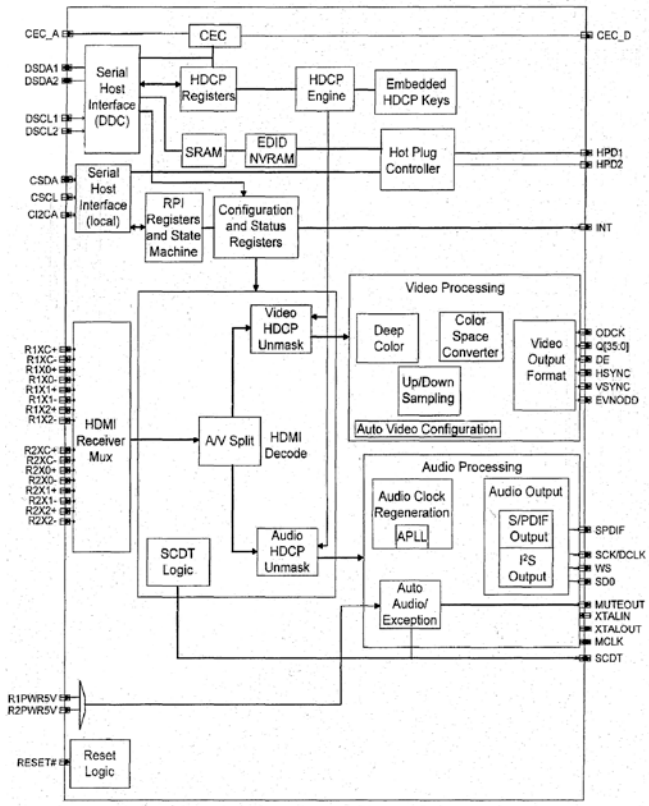

Parts Location Diagrams

Cabinet top assembly

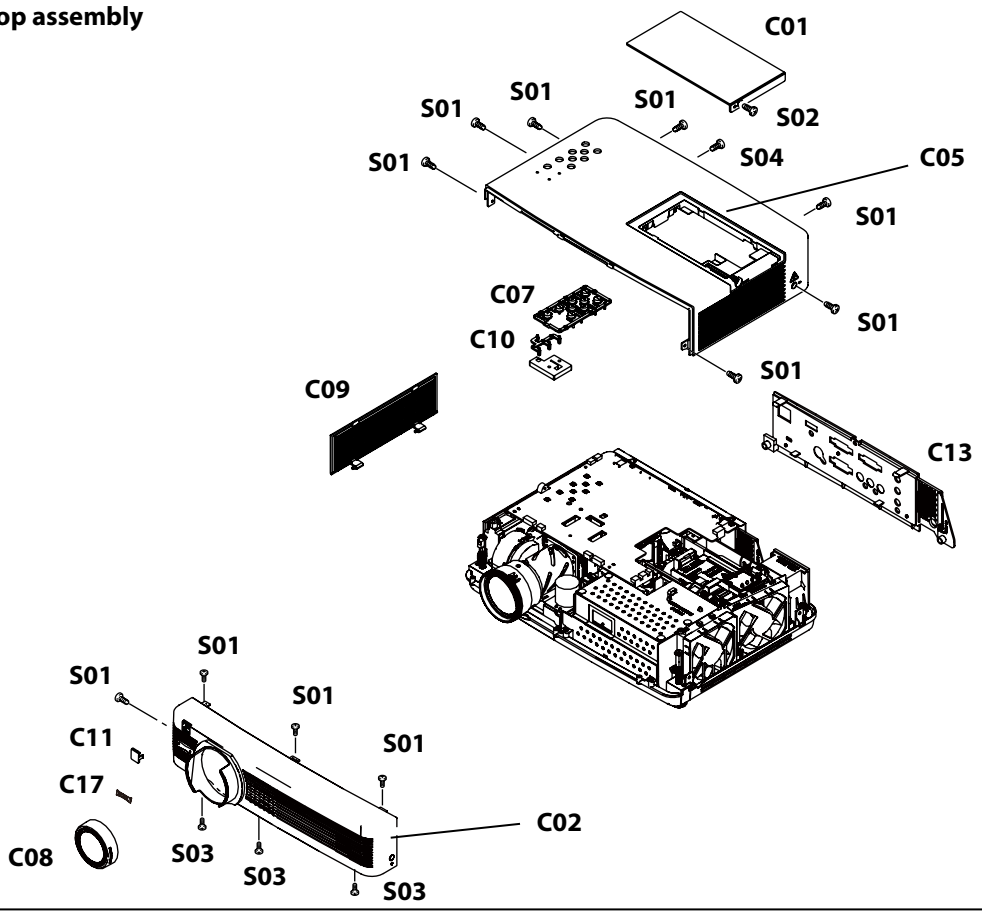

Cabinet bottom-1 assembly

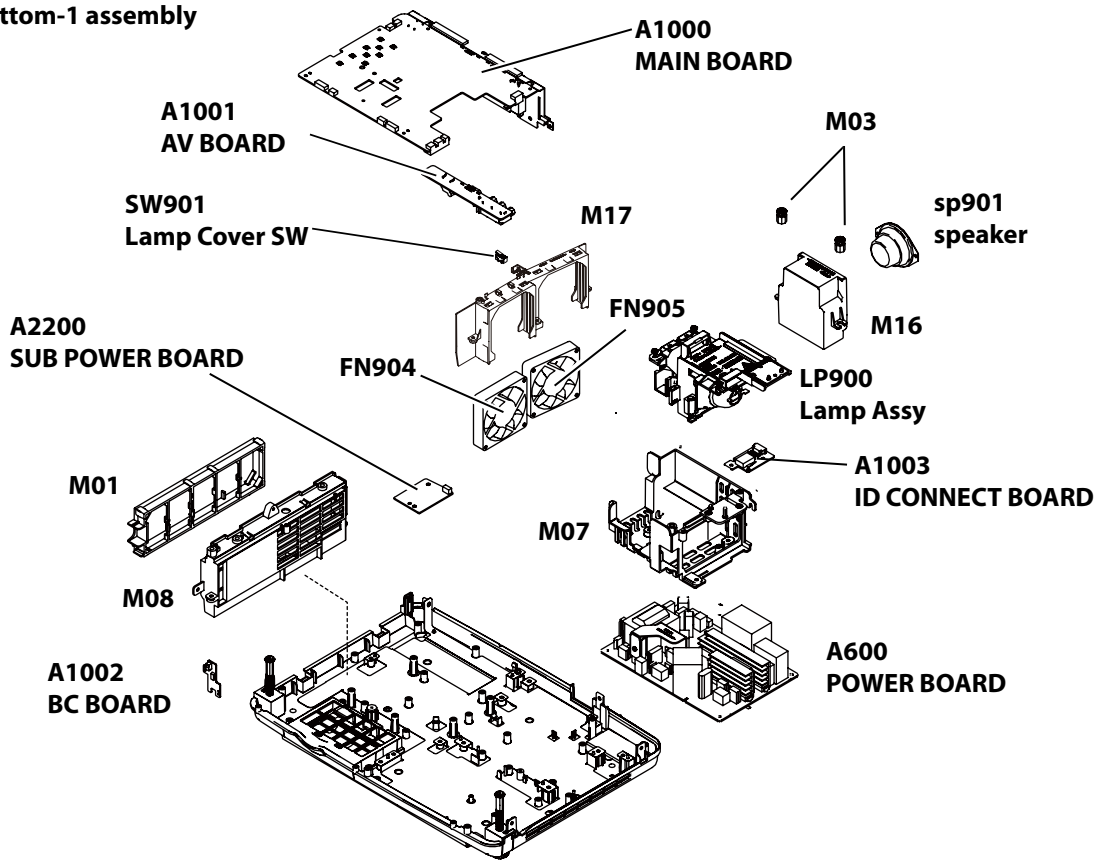

Parts Location Diagrams

Cabinet bottom-2 assembly

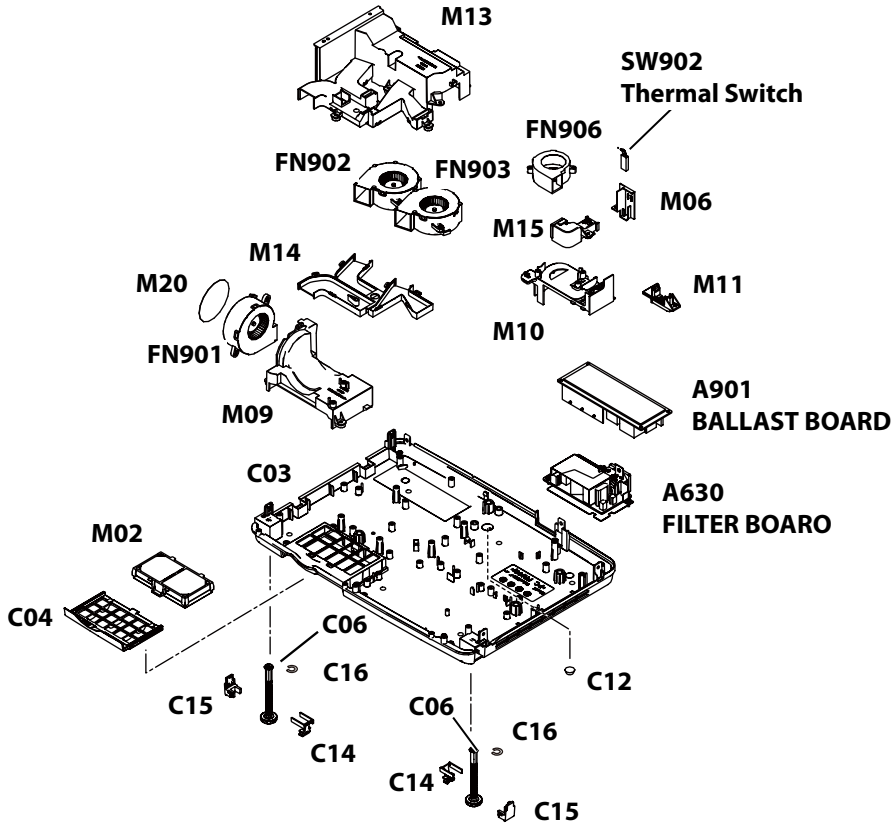

Projection Lens

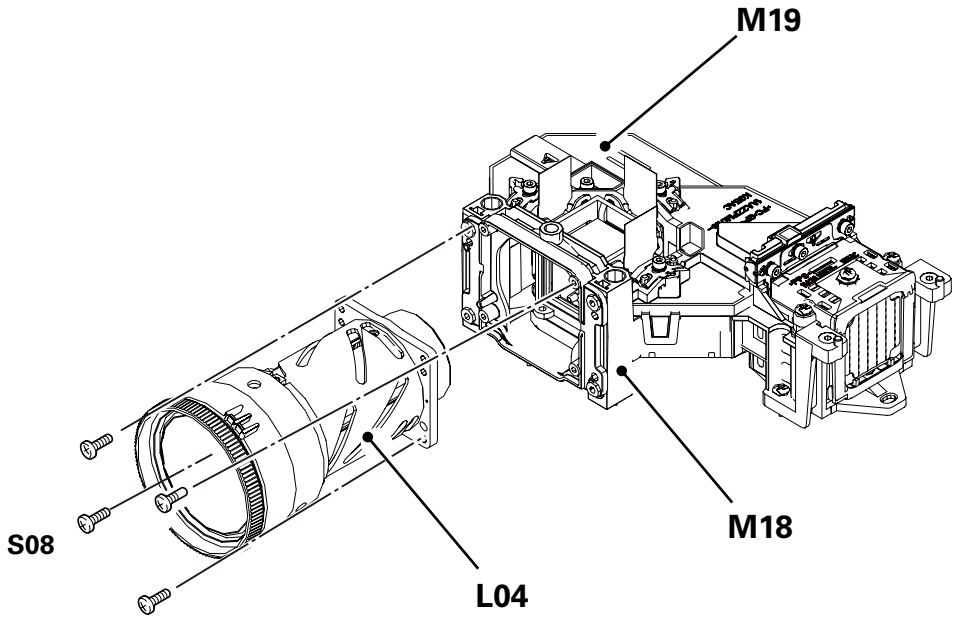

Integrator lens and Condenser lens(out) assembly

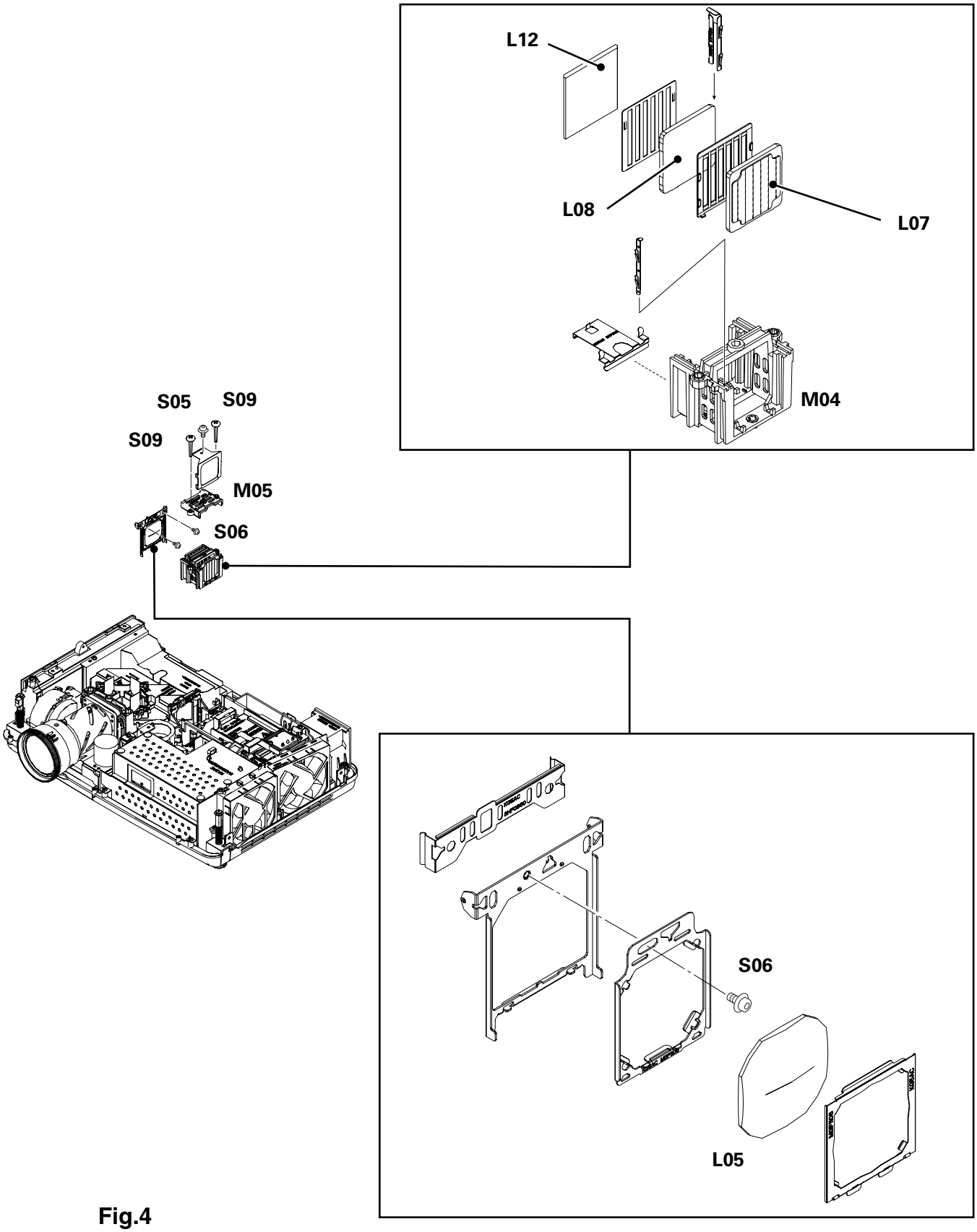

Fig.4

Parts Location Diagrams

Polarrized glass-in assembly

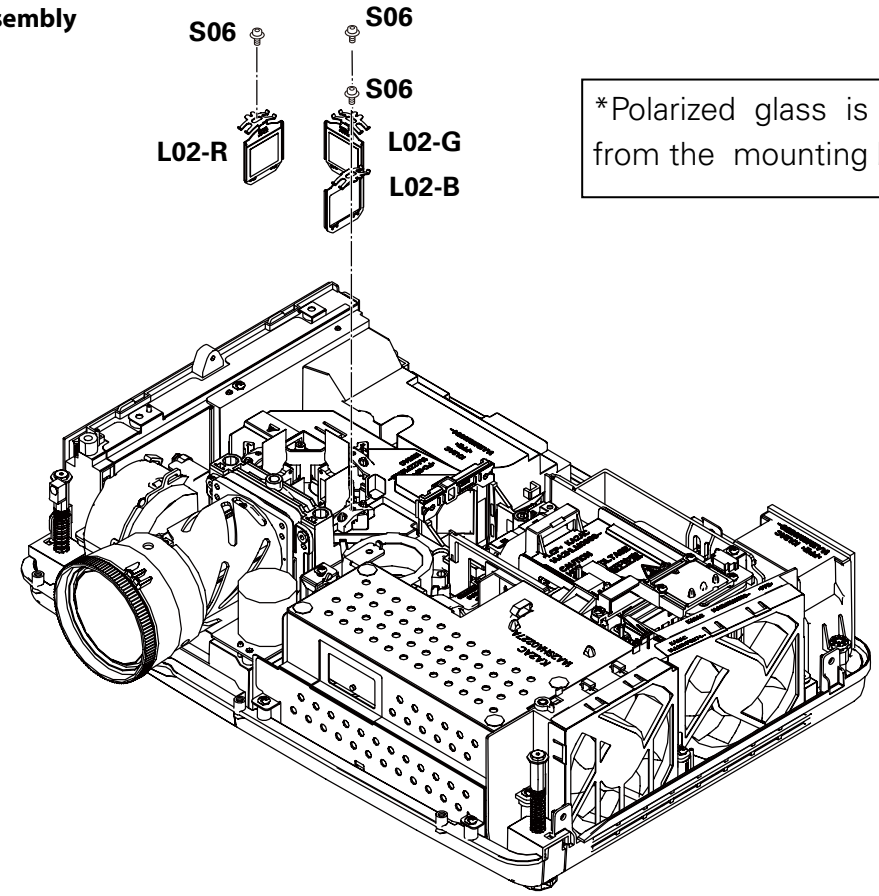

*Polarized glass is not removed from the mounting base.

LCD Panel/Prism Assembly

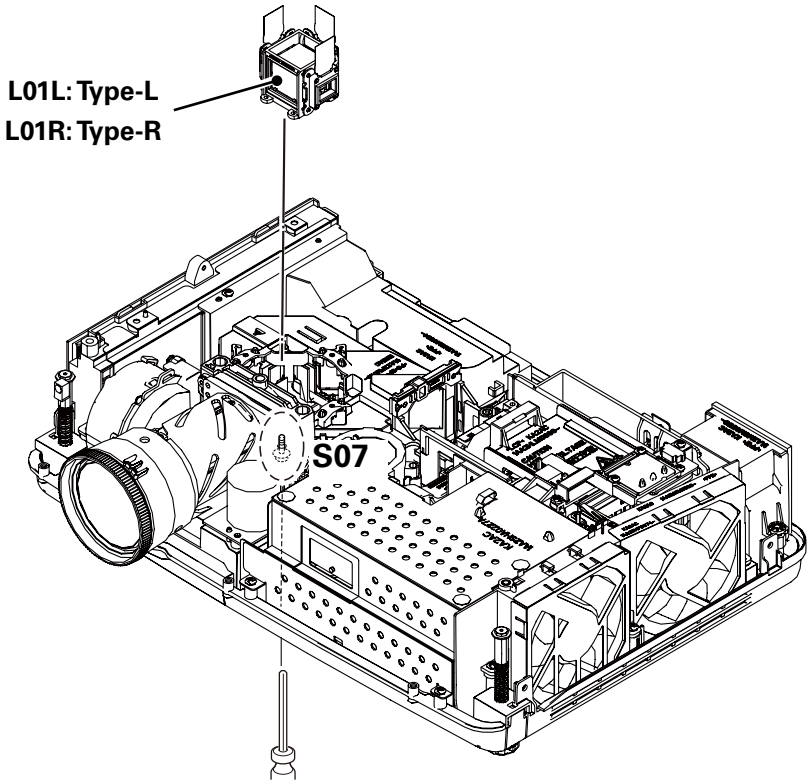

Parts Location Diagrams

Relay lens (Out) assembly

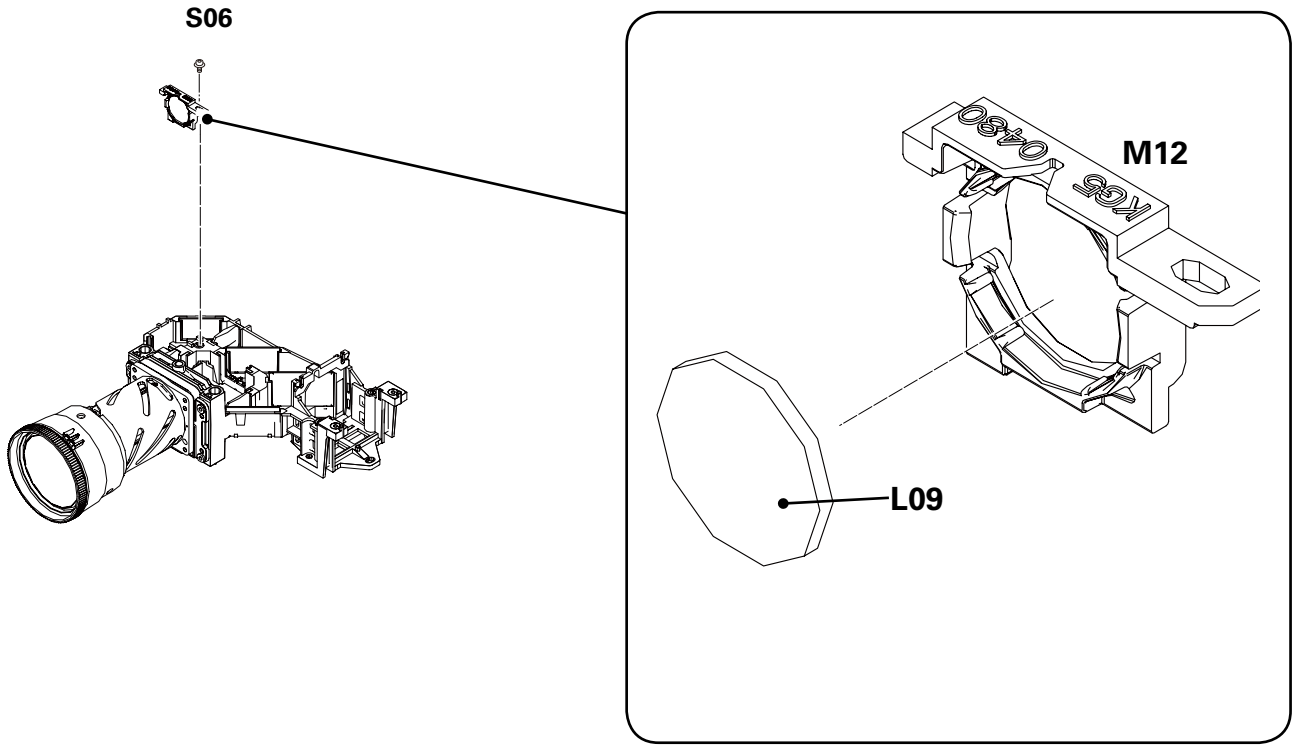

Parts Location Diagrams

● In the optical unit

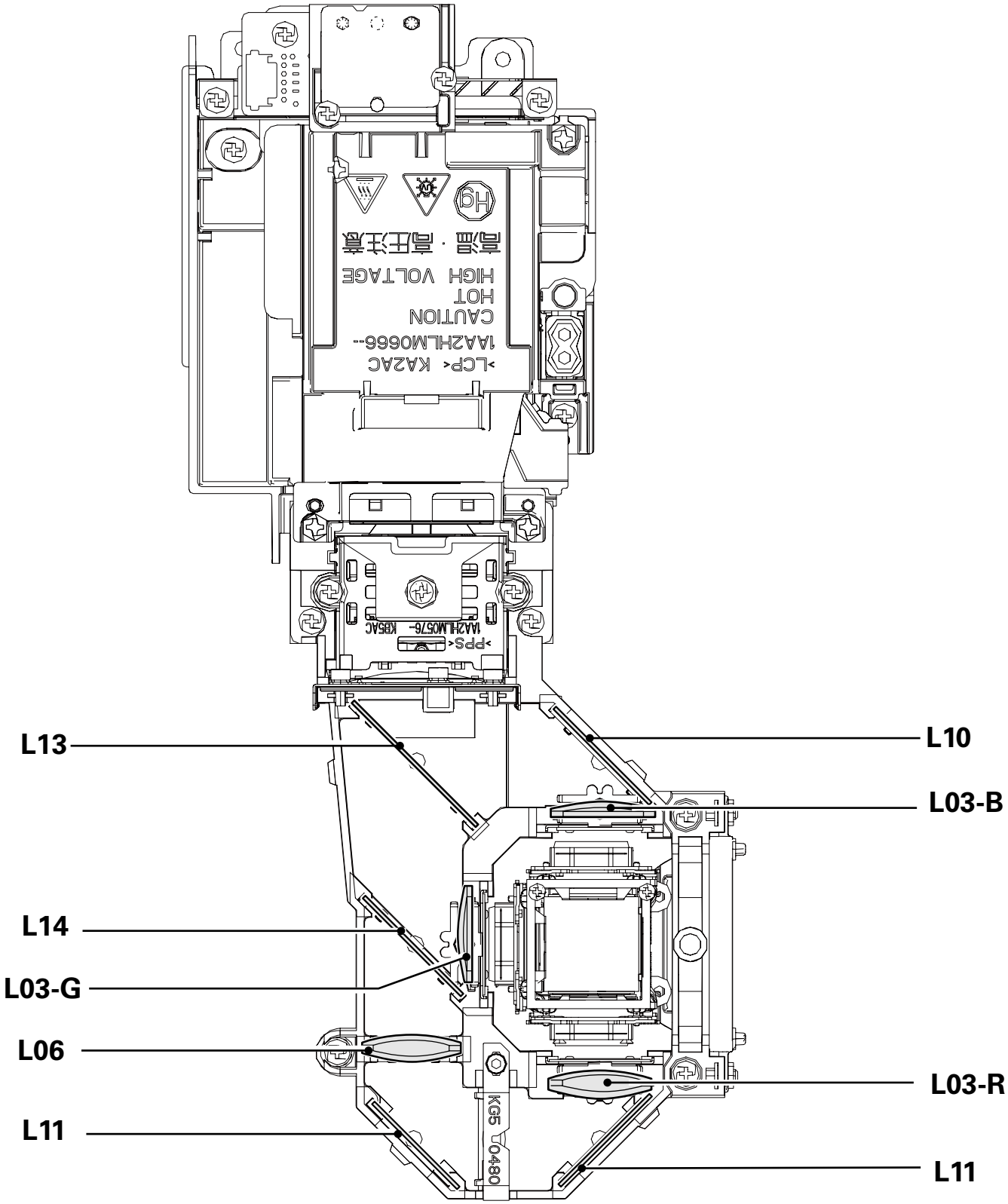

CAUTION:
Part must be placed in specified direction when replacing the optical parts. Please see “Optical Parts Disassembly” for further instructions.

Parts Location Diagrams

REMOTE CONTROL

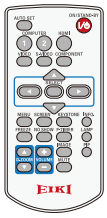

MANUAL

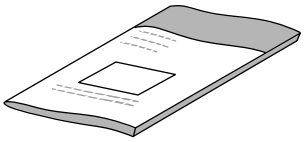

CD-ROM

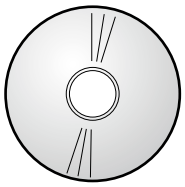

VGA CABLE

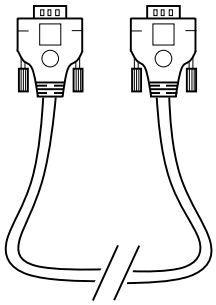

AC CORD

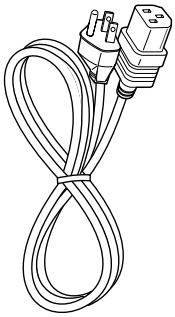

FILTER COVER

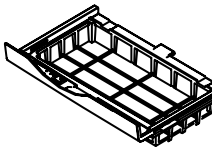

STRAP

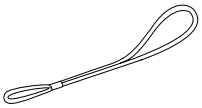

CARRYING CASE

Mechanical Parts List

Key No.	Part No.	Description

PACKING MATERIALS

	610 354 7527	CARTON CASE-KC2BC
	610 354 7756	POLY BAG 0440*0480*NC
	610 353 7382	CASE ACC-KA2AC
	610 352 7857	CUSHION TOP-KA2AC
	610 352 7833	CUSHION BTM-KA2AC

ACCESSORIES

OWNER'S MANUAL

	610 354 7381	CD-ROM,OWNERS MANUAL-KC2BC
	655 005 0533	SETUP INST-KC2BC
	610 353 7825	CD-ROM(PJ NW MANAGER)

REMOTE CONTROL

	645 099 3206	ASSY,REMOCON MXAD
	610 344 9944	RC-BATTERY LID-MXAC

AC CORD

⚠US	945 064 6363	CORD,POWER-3.0MK,US
⚠EU	945 054 1156	CORD,POWER-3.0MK
⚠HK	945 054 1149	CORD,POWER-3.138MK

MISCELLANEOUS

	610 343 0249	STRAP CAP-KT7AC
	610 354 1525	COVER,FLT BOTTOM TTR-KA2AC
	610 355 0220	CARRY BAG-KL6A
	945 073 4855	CABLE,INTERFACE VGA
	645 093 1642	CABLE,INTERFACE VGA
	652 002 9552	CABLE,INTERFACE VGA

CABINET PARTS

C01	610 354 4045	COVER LMP-KA2BC
C02	610 354 4038	CAB FRONT-KA2BC
C03	610 357 2772	CAB BTM-KA2AC
C04	610 352 7260	COVER FLT BTM-KA2AC
C05	610 355 4372	CAB TOP SERVICE-KC2BC
C06	610 357 5056	ASSY,ADJ SCREW STEM-KA2AC
C07	610 344 8169	BUTTON CONTROL-KG5BC
C08	610 354 5790	CAP LNS-KA2BC
C09	610 354 4076	COVER FLT SD-KA2BC
C10	610 344 1788	DEC INLAY LED-KF5AC
C11	610 343 0942	DEC INLAY RC-KG5AC
C12	910 325 2477	DEC LEG-PT5EC
C13	610 354 7510	PNL AV-KC2BC
C14	610 357 5063	ADJ_CORE_KG5AC
C15	610 352 7659	STD ADJ BTN-KA2AC
C16	411 001 0300	RING E 5
C17	910 327 3748	BADGE EIKI-MT5BC

CHASSIS PARTS

M01	610 353 6996	FILTER BOX SD-KA2AC
M02	610 353 7009	FILTER BOX BTM-KA2AC
M03	610 349 0830	BUSH -KJ8AC
M04	610 356 9536	HOLDER INT PBS BTM-KJ8YC
M05	610 356 9543	HOLDER INT PBS TOP-KJ8YC
M06	610 352 7413	HLD SN-KA2AC
M07	610 356 9406	LMP_HOUSE-KA2AC
M08	610 352 7451	HLD FLT DUCT SD-KA2AC
M09	610 352 7499	HLD FLT DUCT BTM-KA2AC
M10	610 352 7482	HLD FN LMP-KA2AC
M11	610 352 9097	HLD PULG-KA2AC
M12	610 343 1314	MTG RELAY OUT-KG5AC
M13	610 355 6796	MTG DUCT PNL TOP-KC2AC
M14	610 352 6720	MTG DUCT PNL BTM-KA2AC
M15	610 352 7536	MTG DUCT LMP T-KA2AC
M16	610 352 7581	MTG SP-KA2AC
M17	610 353 1137	MTG EXH FN-KA2AC
M18	610 353 4442	OPTICAL BASE BTM-KA2AC
M19	610 353 3759	OPTICAL BASE TOP(A)-KG5AC
M20	610 353 1151	SPC SHT FN-KA2AC

SCREWS

S01	411 189 8600	SCR BIN 3X8
S02	412 078 7001	SPECIAL SCREW
S03	411 200 2808	SCR TPG FLT 3X8
S04	411 192 9809	SCR PAN 3X8
S05	411 192 5108	SCR PAN+SW+W 2.5X6
S06	412 077 8108	SPECIAL SCREW-2.5X6
S07	312 070 3400	SPECIAL SCREW-3.0X10V
S08	411 191 6304	SCR BIN 2.5X8
S09	411 189 8303	SCR BIN 3X14

OPTICAL PARTS

L01L*	610 355 2484	ASSY,PNL/PRISM L-KC2AC
L01R*	610 357 0488	ASSY,PNL/PRISM R-KC2AC
L02-R	610 346 5562	ASSY,POL R IN-KG5AC
L02-G	610 357 3595	ASSY,POL G IN-KC2AC
L02-B	610 346 5548	ASSY,POL B IN-KD5AC
L03-R	645 099 0571	LENS,RELAY(IN)
L03-G	645 096 4657	LENS,CONDENSER(G)
L03-B	645 096 4657	LENS,CONDENSER(G)
L04	645 103 9170	LENS,PROJECTION
L05	645 099 9109	LENS,CONDENSER(OUT)NC
L06	645 099 0571	LENS,RELAY(IN)
L07	645 099 9161	LENS,INTEGRATOR(IN)
L08	645 099 9178	LENS,INTEGRATOR(OUT)
L09	645 099 0601	LENS,RELAY(OUT)
L10	645 096 4701	MIRROR(B)
	645 101 0247	MIRROR(B)
L11	645 096 4718	MIRROR(R)
	645 101 0254	MIRROR(R)
L12	945 086 6372	PRISM(PBS)
L13	645 104 6918	DICHROIC MIRROR (B)
L14	645 104 6901	DICHROIC MIRROR (G)

*There are 2 type of LCD Panel/Prism Assy. Check which type of LCD Panel/Prism Assy is used. How to check the type, see the item "Optical PartsDisassembly".

SERVICE TOOLS

	610 343 5596	CD-ROM,PJ SVC TOOL V420

Electrical Parts List

Product safety should be considered when a component replacement is made in any area of a projector.
Components indicated by a ⚠ mark in this parts list and the circuit diagram show components whose value have special significance to product safety. It is particularly recommended that only parts specified on the following parts list be used for components replacement pointed out by the mark.

● **Read Description in the parts list**

Read description in the Capacitor and Resistor as follows:

CAPACITOR CERAMIC 100P K 50V

Rated Voltage

Tolerance Symbols:

Less than 10pF

A : Not specified	B : ±0.1pF	C : ±0.25pF
D : ±0.5pF	E : +0 -1pF	F : ±1PF
G : ±2pF	H : +0.1 -0pF	L : +0 -0.1pF
R : ±0.25 -0pF	S : +0-0.25pF	

More than 10pF

A : Not specified	B : ±0.1%	C : ±0.25%
D : ±0.5%	F : ±1%	G : ±2%
H : ±3%	J : ±5%	K : ±10%
L : ±15%	M : ±20%	N : ±30%
P : +100-0%	Q : +30-10%	T : +50-10%
U : +75-10%	V : +20-10%	W : +100-10%
X : +40-20%	Y : +150-10%	Z : +80-20%

Rated value: P=pico farad, U=micro farad

Material:

CERAMIC..... Ceramic
MT-PAPER..... Metallized Paper
POLYESTER..... Polyester
MT-POLYEST..... Metallized Polyester
POLYPRO..... Polypropylene
MT-POLYPRO.... Metallized Polypropylene
COMPO FILM..... Composite film
MT-COMPO..... Metallized Composite
STYRENE..... Styrene
TA-SOLID..... Tantalum Oxide Solid Electrolytic
AL-SOLID..... Aluminium Solid Electrolytic
ELECT..... Aluminum Foil Electrolytic
NP-ELECT..... Non-polarised Electrolytic
OS-SOLID..... Aluminium Solid with Organic Semiconductive Electrolytic
POS-SOLID..... Polymerized Organic Semiconductive
DL-ELECT..... Double Layered Electrolytic
PPS-FILM..... Polyphenylene Sulfide Film
MT-PPS-FILM..... Metalized Polyphenylene Sulfide Film
MT-PEN-FILM..... Metalized Polyethylenenaphthalate Film
CAPACITOR..... Other

RESISTOR CARBON 4.7K J A 1/4W

Rated Wattage

Performance Symbols:
A: General B: Non flammable Z: Low noise
Other: Temperature coefficient

T: ±10ppm/°C	U: ±25ppm/°C	C: ±50ppm/°C
D: ±100ppm/°C	E: ±200ppm/°C	F: ±250ppm/°C
G: ±350ppm/°C	H: ±1000ppm/°C±10%	W: ±1200ppm/°C±10%
Y: ±1400ppm/°C±10%	J: ±2000ppm/°C±10%	K: ±2400ppm/°C±10%
L: ±2700ppm/°C±10%	M: ±3000ppm/°C±10%	N: ±3300ppm/°C±10%
P: ±3600ppm/°C±10%	Q: ±3900ppm/°C±10%	R: ±4200ppm/°C±10%
S: ±4300ppm/°C±10%	V: ±4500ppm/°C±10%	X: ±8000ppm/°C±10%

Tolerance Symbols:

A: ±0.05%	B: ±0.1%	C: ±0.25%	D: ±0.5%
F: ±1%	G: ±2%	J: ±5%	K: ±10%
M: ±20%	P: +5-15%	Z: 0 ohm	

Rated value, ohms:
K: 1,000, M: 1,000,000

Material:

CARBON..... Carbon
MT-FILM..... Metal Film
OXIDE-MT..... Oxide Metal Film
SOLID..... Composition
MT-GLAZE..... Metal Glaze
WIRE WOUND... Wire Wound
CERAMIC RES.. Ceramic
FUSIBLE RES.... Fusible
RESISTOR ..... Other

Electrical Parts List

Key No.	Part No.	Description
ASSEMBLED BOARDS		
⚠A600	655 004 5621	ASSY,PWB,POWER KA2PC
⚠A630	655 004 5638	ASSY,PWB,FILTER KA2PC
⚠A1000	655 004 6215	ASSY,PWB,MAIN KC2BC
⚠A1001	655 004 4228	ASSY,PWB,AV KC2AC
⚠A1002	655 004 4235	ASSY,PWB,RC KC2AC
⚠A1003	655 004 4242	ASSY,PWB,ID CONNECT KC2AC
⚠A2200	655 004 3313	ASSY,PWB,SUB POWER KA2AC
OUT OF CIRCUIT BOARD		
L601	945 033 2228	CORE,FERRITE
	952 001 9431	CORE,CLAMP
⚠A901	645 103 7121	UNIT,BALLAST
A901A	610 345 4276	CABLE,BALLAST KR5AC
⚠LP900	610 352 7949	COMPL OPTICAL LAMP-KC2AC
⚠FN901	645 103 9774	MOTOR,BLW DC 2.4W
⚠FN902	645 103 9774	MOTOR,BLW DC 2.4W
⚠FN903	645 103 9774	MOTOR,BLW DC 2.4W
⚠FN904	645 104 1098	MOTOR,FAN DC 2.52W
⚠FN905	645 104 1104	MOTOR,FAN DC 2.52W
⚠FN906	645 104 1081	MOTOR,BLW DC 2.04W
K10B1	312 073 0406	SPECIAL SCREW
K10B2	312 073 0406	SPECIAL SCREW
K10C1	312 073 0406	SPECIAL SCREW
K10C2	312 073 0406	SPECIAL SCREW
K20A1	312 073 0406	SPECIAL SCREW
K20A2	312 073 0406	SPECIAL SCREW
SP901	652 003 2699	SPEAKER,8
SW901	645 097 3925	SWITCH,MICRO 1P-2T
⚠Z6B&6C(SW902)		
	652 003 3672	ASSY,WIRE
A600 655 004 5621 ASSY,PWB,POWER KA2PC		
TRANSISTOR		
Q611	305 217 6600	TR 2SK3934
Q612	305 217 6600	TR 2SK3934
Q621	305 015 8727	TR 2SC2812-L6-TB
	305 015 8925	TR 2SC2812-L7-TB
	305 163 1615	TR 2SC2812N-L6-TB0
	305 173 9816	TR 2SC3928A1R
	305 173 9915	TR 2SC3928A1S
Q622	305 015 8727	TR 2SC2812-L6-TB
	305 015 8925	TR 2SC2812-L7-TB
	305 163 1615	TR 2SC2812N-L6-TB0
	305 173 9816	TR 2SC3928A1R
	305 173 9915	TR 2SC3928A1S
Q641	305 015 8727	TR 2SC2812-L6-TB
	305 015 8925	TR 2SC2812-L7-TB
	305 163 1615	TR 2SC2812N-L6-TB0
	305 173 9816	TR 2SC3928A1R
	305 173 9915	TR 2SC3928A1S
Q642	305 015 8727	TR 2SC2812-L6-TB
	305 015 8925	TR 2SC2812-L7-TB
	305 163 1615	TR 2SC2812N-L6-TB0
	305 173 9816	TR 2SC3928A1R
	305 173 9915	TR 2SC3928A1S
Q643	405 223 4406	TR 2S4085LS
Q651	305 147 2218	TR 2SA1037AK-S-T146
	405 220 3016	TR ISA1235AC1F
	305 134 5928	TR 2SA1037AK-T146-R
	405 220 3115	TR ISA1235AC1E
	305 173 9717	TR 2SA1235A1F
	305 173 9618	TR 2SA1235A1E
Q661	305 015 8727	TR 2SC2812-L6-TB
	305 015 8925	TR 2SC2812-L7-TB
	305 163 1615	TR 2SC2812N-L6-TB0
	305 173 9816	TR 2SC3928A1R
	305 173 9915	TR 2SC3928A1S
INTEGRATED CIRCUIT		
IC621	409 690 7918	IC FA5550N
IC631	309 653 7405	IC MR4010-7101
IC671	409 692 2515	IC TA76L431FB
CAPACITOR		
C611	303 222 1316	CERAMIC 1000P K 1K
C612	303 222 1316	CERAMIC 1000P K 1K
C613	303 451 4119	MT-POLYEST 1U K 450V
C614	303 451 4119	MT-POLYEST 1U K 450V
C615	404 125 6501	ELECT 220U M 420V
C621	303 336 3510	CERAMIC 0.47U K 16V
C622	304 091 4504	CERAMIC 0.047U K 50V
C623	304 090 1207	CERAMIC 0.01U K 50V
C625	304 090 1108	CERAMIC 1000P K 50V
C626	303 396 9613	CERAMIC 1U K 25V
	403 478 5912	CERAMIC 1U K 25V
C627	304 091 3309	CERAMIC 2200P K 50V
C629	303 265 3216	CERAMIC 1000P J 50V
C631	303 157 4215	CERAMIC 220P J 50V
C632	303 245 4417	CERAMIC 470P K 2K
C633	303 265 3216	CERAMIC 1000P J 50V
C634	304 091 3309	CERAMIC 2200P K 50V
C641	304 091 2609	CERAMIC 0.1U K 50V
C644	303 417 9912	CERAMIC 4.7U K 25V
C651	304 108 0901	ELECT 220U M 25V
C653	303 370 1510	CERAMIC 0.1U K 50V
C661	403 468 6219	ELECT 1500U M 25V
C662	304 091 2609	CERAMIC 0.1U K 50V
	303 367 0410	CERAMIC 0.1U K 50V
C663	304 091 2609	CERAMIC 0.1U K 50V
	303 367 0410	CERAMIC 0.1U K 50V
C664	303 429 6708	ELECT 1500U M 10V
C665	303 409 9913	ELECT 470U M 16V
C666	303 392 0733	ELECT 1000U M 25V
C671	304 091 2609	CERAMIC 0.1U K 50V
C674	403 477 6514	MT-POLYEST 0.01U J 630V
C691	304 104 9502	CERAMIC 1500P M 250V
C692	304 104 9502	CERAMIC 1500P M 250V
⚠C693	304 073 4508	CERAMIC 2200P M 250V
RESISTOR		
R611	401 353 0311	MT-GLAZE 430K JA 1/3W
R612	401 353 0212	MT-GLAZE 360K JA 1/3W
R613	301 256 6314	MT-GLAZE 47K JA 1/10W
R614	302 106 5508	RESISTER 0.075 KB 5W
R615	402 122 0409	MT-GLAZE 680K DD 1/4W
R616	402 122 0409	MT-GLAZE 680K DD 1/4W
R617	301 256 6314	MT-GLAZE 47K JA 1/10W
R618	401 361 2314	MT-GLAZE 750K JA 1/3W
R619	301 150 6014	MT-GLAZE 0.000 ZA 1/10W
R620	301 256 5614	MT-GLAZE 47 JA 1/10W
R621	301 326 1812	MT-GLAZE 8.2K DA 1/10W
R622	301 309 8517	MT-GLAZE 330 DA 1/10W
R623	401 360 8010	MT-GLAZE 470 DA 1/10W
R624	301 162 2912	MT-GLAZE 220 JA 1/10W
R625	301 256 5614	MT-GLAZE 47 JA 1/10W
R626	301 150 6014	MT-GLAZE 0.000 ZA 1/10W
R627	301 150 5918	MT-GLAZE 10K JA 1/10W

Electrical Parts List

Key No.	Part No.	Description		
R628	301 150 5918	MT-GLAZE	10K JA	1/10W
R629	301 255 7312	MT-GLAZE	510K JA	1/10W
R631	301 255 7718	MT-GLAZE	11K JA	1/10W
R632	401 361 2314	MT-GLAZE	750K JA	1/3W
R633	301 150 6014	MT-GLAZE	0.000 ZA	1/10W
R634	301 256 1715	MT-GLAZE	33K JA	1/10W
R635	402 122 1802	OXIDE-MT	0.39JA	1W
	302 099 6308	OXIDE-MT	0.39JA	1W
R636	301 162 3018	MT-GLAZE	22K JA	1/10W
R637	301 255 6117	MT-GLAZE	20K JA	1/10W
R638	301 256 6314	MT-GLAZE	47K JA	1/10W
R639	301 277 7215	MT-GLAZE	470 JA	1/3W
R640	301 150 6014	MT-GLAZE	0.000 ZA	1/10W
R641	301 150 5918	MT-GLAZE	10K JA	1/10W
R642	301 255 9514	MT-GLAZE	220K JA	1/10W
R643	301 150 5918	MT-GLAZE	10K JA	1/10W
R644	301 150 5918	MT-GLAZE	10K JA	1/10W
R646	301 256 7212	MT-GLAZE	18K JA	1/10W
R648	301 256 7212	MT-GLAZE	18K JA	1/10W
R651	301 150 5918	MT-GLAZE	10K JA	1/10W
R652	301 292 1915	MT-GLAZE	22 FA	1/2W
R662	301 152 3219	MT-GLAZE	330 JA	1/10W
R665	402 109 6806	OXIDE-MT	100KJA	2W
	302 093 4805	OXIDE-MT	100KJA	2W
R671	301 256 7618	MT-GLAZE	3.9K JA	1/10W
R672	301 150 6212	MT-GLAZE	1K JA	1/10W
R673	301 264 2919	MT-GLAZE	12K FA	1/10W
R674	301 264 7518	MT-GLAZE	2.7K FA	1/10W
R675	301 162 3711	MT-GLAZE	4.7K JA	1/10W
R676	301 264 2810	MT-GLAZE	1.2K FA	1/10W
R683	301 265 0211	MT-GLAZE	390 FA	1/10W
R684	301 264 9314	MT-GLAZE	3.3K FA	1/10W
R692	301 037 5413	MT-GLAZE	1K JA	1/10W
R693	301 037 6717	MT-GLAZE	1.2K JA	1/10W
TRANSFORMER				
⚠T651	645 097 6483	TRANS,POWER,PULSE		
COIL				
⚠L611	945 081 4878	LINE FILTER		
⚠L612	645 089 2561	INDUCTOR,700U		
L613	910 229 3532	CORE		
L614	910 229 3532	CORE		
L631	952 001 0124	CORE,PIPE		
	910 078 5954	PIPE CORE		
L661	910 229 3532	CORE		
L662	910 229 3532	CORE		
L663	652 002 8500	INDUCTOR 330OHM, P		
DIODE				
D611	307 253 7405	DIODE FMXA-1106S		
D611D	645 098 1715	CORE,FERRITE		
D611E	645 098 1715	CORE,FERRITE		
D612	307 149 0810	DIODE 1SS355-TE-17		
	408 062 7201	DIODE 1SS355		
	307 163 0414	DIODE 1SS352-(TPH3)		
D613	307 149 0810	DIODE 1SS355-TE-17		
	408 062 7201	DIODE 1SS355		
	307 163 0414	DIODE 1SS352-(TPH3)		
D631	307 149 0810	DIODE 1SS355-TE-17		
	408 062 7201	DIODE 1SS355		
	307 163 0414	DIODE 1SS352-(TPH3)		
D632	307 247 8827	DIODE RF101L2S		
D633	307 146 8106	DIODE EG01C		
D651	307 247 8827	DIODE RF101L2S		
D661	407 267 3100	DIODE SG10SC9M		
	407 269 8400	DIODE FMEN-210A		
D662	407 267 3001	DIODE SG10SC6M		
	407 269 8509	DIODE FMW-2106		
D663	307 190 4119	DIODE SFPL-52V		
	307 247 8827	DIODE RF101L2S		
D664	307 210 5416	DIODE RB551V-30-TE-17		
D666	307 146 8106	DIODE EG01C		
DB611	307 202 7708	DIODE D10XB60		
MISCELLANEOUS				
⚠F631	324 006 1305	FUSE	250V	2.5A
⚠PC661	407 265 7813	PC TLP781F(D4-GB-TP7)		
	307 223 8312	PC TLP421F(D4-GR-TP4)		
	307 223 7315	PC TLP421F(D4-GB-TP4)		
⚠PC663	407 265 7813	PC TLP781F(D4-GB-TP7)		
	307 223 8312	PC TLP421F(D4-GR-TP4)		
	307 223 7315	PC TLP421F(D4-GB-TP4)		
⚠PC671	407 265 7813	PC TLP781F(D4-GB-TP7)		
	307 223 8312	PC TLP421F(D4-GR-TP4)		
	307 223 7315	PC TLP421F(D4-GB-TP4)		
PTH611	308 037 5501	THERMISTOR NTPDB5R0LDHB0		
PTH641	408 062 4606	TH PRF18BD471QB1RB		
ZD631	307 206 5413	ZD UDZS-TE-178.2B		
ZD632	307 179 1214	ZENER DIODE PTZ13B-TE25		
A630	**655 004 5638**	**ASSY,PWB,FILTER KA2PC**		
CAPACITOR				
⚠C601	404 113 2904	MT-POLYEST	0.33U K	275V
⚠C602	404 117 8902	MT-POLYEST	1U K	310V
	404 117 6403	MT-POLYEST	1U K	275V
⚠C603	304 073 5109	CERAMIC	470P K	250V
⚠C604	304 073 5109	CERAMIC	470P K	250V
RESISTOR				
⚠R601	301 287 5416	MT-GLAZE	200K JA	1W
⚠R602	301 287 5416	MT-GLAZE	200K JA	1W
VARIABLE RESISTOR				
⚠VA601	408 066 1700	VD TND14SE471KB0SLAA0		
COIL				
⚠L601	645 099 6825	LINE FILTER		
⚠LF601	645 093 1765	SOCKET,INLET AC 3P		
MISCELLANEOUS				
⚠F601	323 021 7804	FUSE	250V	6.3A
	423 034 4101	FUSE	250V	6.3A
A1000	**655 004 6215**	**ASSY,PWB,MAIN KC2BC**		
TRANSISTOR				
Q1001	406 021 7804	TR 2SC4617		
Q1002	406 021 7804	TR 2SC4617		
Q1003	305 217 7815	TR HN1B04FE-Y TE85L		
Q1004	305 217 7815	TR HN1B04FE-Y TE85L		
Q1005	406 021 7804	TR 2SC4617		
Q1006	305 217 7815	TR HN1B04FE-Y TE85L		
Q1007	406 021 7804	TR 2SC4617		
Q1008	406 021 7804	TR 2SC4617		
Q1062	406 021 7804	TR 2SC4617		
Q2011	406 021 7804	TR 2SC4617		
Q2021	406 021 7804	TR 2SC4617		
Q2031	406 021 7804	TR 2SC4617		
Q3051	406 021 7804	TR 2SC4617		
Q3601	406 021 7804	TR 2SC4617		
Q3603	406 021 7804	TR 2SC4617		
Q4012	305 147 2218	TR 2SA1037AK-S-T146		
	405 220 3016	TR ISA1235AC1F		
	305 134 5928	TR 2SA1037AK-T146-R		

Electrical Parts List

Key No.	Part No.	Description
	405 220 3115	TR ISA1235AC1E
	305 173 9717	TR 2SA1235A1F
	305 173 9618	TR 2SA1235A1E
Q4014	305 217 7815	TR HN1B04FE-Y TE85L
Q5021	406 021 7804	TR 2SC4617
Q5030	406 021 7804	TR 2SC4617
Q5031	405 221 7914	TR HN1C01FE-Y
Q5032	305 147 2218	TR 2SA1037AK-S-T146
	405 220 3016	TR ISA1235AC1F
	305 134 5928	TR 2SA1037AK-T146-R
	405 220 3115	TR ISA1235AC1E
	305 173 9717	TR 2SA1235A1F
	305 173 9618	TR 2SA1235A1E
Q5033	305 147 2218	TR 2SA1037AK-S-T146
	405 220 3016	TR ISA1235AC1F
	305 134 5928	TR 2SA1037AK-T146-R
	405 220 3115	TR ISA1235AC1E
	305 173 9717	TR 2SA1235A1F
	305 173 9618	TR 2SA1235A1E
Q5035	405 221 7914	TR HN1C01FE-Y
Q5036	305 217 7815	TR HN1B04FE-Y TE85L
Q5037	305 147 2218	TR 2SA1037AK-S-T146
	405 220 3016	TR ISA1235AC1F
	305 134 5928	TR 2SA1037AK-T146-R
	405 220 3115	TR ISA1235AC1E
	305 173 9717	TR 2SA1235A1F
	305 173 9618	TR 2SA1235A1E
Q5038	406 021 7804	TR 2SC4617
Q5061	405 221 7914	TR HN1C01FE-Y
Q5062	405 221 7914	TR HN1C01FE-Y
Q5306	406 021 7804	TR 2SC4617
Q5331	305 217 7815	TR HN1B04FE-Y TE85L
Q5332	305 217 7815	TR HN1B04FE-Y TE85L
Q5336	305 147 2218	TR 2SA1037AK-S-T146
	405 220 3016	TR ISA1235AC1F
	305 134 5928	TR 2SA1037AK-T146-R
	405 220 3115	TR ISA1235AC1E
	305 173 9717	TR 2SA1235A1F
	305 173 9618	TR 2SA1235A1E
Q5615	305 217 7815	TR HN1B04FE-Y TE85L
Q5700	305 217 7815	TR HN1B04FE-Y TE85L
Q5701	305 174 1819	TR CPH3424-TL-E
Q5753	305 217 6917	TR TPC6107 TE85L
Q5755	406 021 7804	TR 2SC4617
Q6844	405 221 7914	TR HN1C01FE-Y
Q6845	405 221 7914	TR HN1C01FE-Y
Q7801	406 021 7804	TR 2SC4617
Q7802	406 021 7804	TR 2SC4617
Q7813	305 217 7815	TR HN1B04FE-Y TE85L
Q7814	305 217 7815	TR HN1B04FE-Y TE85L
Q7842	305 217 7815	TR HN1B04FE-Y TE85L
Q7864	305 217 7815	TR HN1B04FE-Y TE85L
Q9602	305 211 1918	TR RJU002N06
Q9603	305 211 1918	TR RJU002N06
Q9604	305 211 1918	TR RJU002N06
Q9631	305 217 7815	TR HN1B04FE-Y TE85L
INTEGRATED CIRCUIT		
IC1051	409 697 3913	IC LE24C023M-TLM-E
IC1341	409 699 3010	IC PT7M7809STE
IC2201	310 587 8703	IC ISL98001CQZ-140
IC3582	409 695 9313	IC RT9711CGB
IC3801	309 495 2517	IC SP3232ECY/TR
IC3802	310 349 4103	IC TC7W241FU(TE12L)
IC3803	310 349 4103	IC TC7W241FU(TE12L)
IC3804	310 349 4103	IC TC7W241FU(TE12L)
IC3856	310 474 1503	IC HD74LV1G126A
IC4001	410 686 4702	IC EL5306IUZ-T7
IC4701	309 428 8428	IC TC7WT125FU-TE12L
IC5001	410 718 8708	IC TLV320AIC3105IRHBR
IC5002	309 438 5513	IC TC4052BFT
IC5003	309 039 7817	IC NJM4558M-TE2
IC5602	410 728 5407	IC XC6209B502MR
IC5621	410 651 0104	IC R1131D101B-TR-F
IC5821	409 694 1219	IC ST1S10PHR
IC5851	409 699 6615	IC BD7820FP
IC5861	409 694 1219	IC ST1S10PHR
IC592	309 461 7822	IC PQ20WZ11
IC7811	410 706 4705	IC TPS54286PWPR
IC7841	309 461 7822	IC PQ20WZ11
IC8001	409 698 5510	IC SII9127ACTU
IC801	410 725 4908	IC M29W640FT70N6E-KC2AC
IC8081	409 695 9313	IC RT9711CGB
IC8091	409 704 7613	IC LV59012M-TLM-H
IC8801	410 725 4809	IC PIC18F67J60-I/PT-KC2AC
IC8821	410 654 4802	IC ADT75BRMZ-REEL
IC8831	410 654 4802	IC ADT75BRMZ-REEL
IC9886	310 474 1503	IC HD74LV1G126A
CAPACITOR		
C016	303 396 9613	CERAMIC 1U K 25V
	303 397 7618	CERAMIC 1U K 25V
	403 478 5912	CERAMIC 1U K 25V
C017	303 420 1415	ELECT 470U M 25V
	303 393 0019	ELECT 470U M 25V
	403 458 4614	ELECT 470U M 25V
C018	303 396 9613	CERAMIC 1U K 25V
	403 478 5912	CERAMIC 1U K 25V
C019	303 396 9613	CERAMIC 1U K 25V
	403 478 5912	CERAMIC 1U K 25V
C021	303 396 9613	CERAMIC 1U K 25V
	303 397 7618	CERAMIC 1U K 25V
	403 478 5912	CERAMIC 1U K 25V
C022	303 396 9613	CERAMIC 1U K 25V
	303 397 7618	CERAMIC 1U K 25V
	403 478 5912	CERAMIC 1U K 25V
C023	303 396 9613	CERAMIC 1U K 25V
	303 397 7618	CERAMIC 1U K 25V
	403 478 5912	CERAMIC 1U K 25V
C024	303 370 1510	CERAMIC 0.1U K 50V
	303 367 0410	CERAMIC 0.1U K 50V
C025	303 370 1510	CERAMIC 0.1U K 50V
	303 367 0410	CERAMIC 0.1U K 50V
C027	303 450 2215	CERAMIC 0.22U K 25V
C028	303 396 9613	CERAMIC 1U K 25V
	303 397 7618	CERAMIC 1U K 25V
	403 478 5912	CERAMIC 1U K 25V
C029	303 370 1510	CERAMIC 0.1U K 50V
	303 367 0410	CERAMIC 0.1U K 50V
C030	303 370 1510	CERAMIC 0.1U K 50V
	303 367 0410	CERAMIC 0.1U K 50V
C031	303 398 4418	ELECT 10U M 25V
C032	303 396 9613	CERAMIC 1U K 25V
	303 397 7618	CERAMIC 1U K 25V
	403 478 5912	CERAMIC 1U K 25V
C033	303 450 2215	CERAMIC 0.22U K 25V
C035	303 396 9613	CERAMIC 1U K 25V
	303 397 7618	CERAMIC 1U K 25V
	403 478 5912	CERAMIC 1U K 25V
C038	303 396 9613	CERAMIC 1U K 25V
	303 397 7618	CERAMIC 1U K 25V
	403 478 5912	CERAMIC 1U K 25V
C039	403 455 1012	CERAMIC 1U K 10V
	303 433 1112	CERAMIC 1U K 10V

Electrical Parts List

Key No.	Part No.	Description		
C041	303 409 3426	CERAMIC	0.1U K	16V
	303 453 8610	CERAMIC	0.1U K	16V
	303 453 8917	CERAMIC	0.1U K	16V
C042	303 409 3426	CERAMIC	0.1U K	16V
	303 453 8610	CERAMIC	0.1U K	16V
	303 453 8917	CERAMIC	0.1U K	16V
C047	303 396 9613	CERAMIC	1U K	25V
	303 397 7618	CERAMIC	1U K	25V
	403 478 5912	CERAMIC	1U K	25V
C049	303 314 5918	CERAMIC	0.47U K	16V
C1001	303 398 3312	ELECT	47U M	10V
C1002	303 387 6119	ELECT	47U M	10V
	303 398 3312	ELECT	47U M	10V
C1004	303 409 3426	CERAMIC	0.1U K	16V
	303 453 8610	CERAMIC	0.1U K	16V
	303 453 8917	CERAMIC	0.1U K	16V
C1006	303 409 3426	CERAMIC	0.1U K	16V
	303 453 8610	CERAMIC	0.1U K	16V
	303 453 8917	CERAMIC	0.1U K	16V
C1007	303 409 3426	CERAMIC	0.1U K	16V
	303 453 8610	CERAMIC	0.1U K	16V
	303 453 8917	CERAMIC	0.1U K	16V
C1008	303 409 3426	CERAMIC	0.1U K	16V
	303 453 8610	CERAMIC	0.1U K	16V
	303 453 8917	CERAMIC	0.1U K	16V
C1009	303 409 3426	CERAMIC	0.1U K	16V
	303 453 8610	CERAMIC	0.1U K	16V
	303 453 8917	CERAMIC	0.1U K	16V
C1012	303 409 3426	CERAMIC	0.1U K	16V
	303 453 8610	CERAMIC	0.1U K	16V
	303 453 8917	CERAMIC	0.1U K	16V
C1016	303 369 0527	CERAMIC	0.01U K	25V
C1019	303 409 3426	CERAMIC	0.1U K	16V
	303 453 8610	CERAMIC	0.1U K	16V
	303 453 8917	CERAMIC	0.1U K	16V
C1041	303 409 3426	CERAMIC	0.1U K	16V
	303 453 8610	CERAMIC	0.1U K	16V
	303 453 8917	CERAMIC	0.1U K	16V
C1049	303 409 3426	CERAMIC	0.1U K	16V
	303 453 8610	CERAMIC	0.1U K	16V
	303 453 8917	CERAMIC	0.1U K	16V
C1092	303 370 0018	CERAMIC	10U K	6.3V
	303 368 7319	CERAMIC	10U K	6.3V
	303 358 3215	CERAMIC	10U K	6.3V
C1103	303 409 3426	CERAMIC	0.1U K	16V
	303 453 8610	CERAMIC	0.1U K	16V
	303 453 8917	CERAMIC	0.1U K	16V
C1105	303 409 3426	CERAMIC	0.1U K	16V
	303 453 8610	CERAMIC	0.1U K	16V
	303 453 8917	CERAMIC	0.1U K	16V
C1301	303 383 5215	CERAMIC	4.7U K	6.3V
C1302	303 409 3426	CERAMIC	0.1U K	16V
	303 453 8610	CERAMIC	0.1U K	16V
	303 453 8917	CERAMIC	0.1U K	16V
C1303	303 409 3426	CERAMIC	0.1U K	16V
	303 453 8610	CERAMIC	0.1U K	16V
	303 453 8917	CERAMIC	0.1U K	16V
C1304	303 409 3426	CERAMIC	0.1U K	16V
	303 453 8610	CERAMIC	0.1U K	16V
	303 453 8917	CERAMIC	0.1U K	16V
C1306	303 409 3426	CERAMIC	0.1U K	16V
	303 453 8610	CERAMIC	0.1U K	16V
	303 453 8917	CERAMIC	0.1U K	16V
C1307	303 409 3426	CERAMIC	0.1U K	16V
	303 453 8610	CERAMIC	0.1U K	16V
	303 453 8917	CERAMIC	0.1U K	16V
C1308	303 409 3426	CERAMIC	0.1U K	16V
	303 453 8610	CERAMIC	0.1U K	16V
	303 453 8917	CERAMIC	0.1U K	16V
C1309	303 409 3426	CERAMIC	0.1U K	16V
	303 453 8610	CERAMIC	0.1U K	16V
	303 453 8917	CERAMIC	0.1U K	16V
C1311	303 409 3426	CERAMIC	0.1U K	16V
	303 453 8610	CERAMIC	0.1U K	16V
	303 453 8917	CERAMIC	0.1U K	16V
C1312	303 409 3426	CERAMIC	0.1U K	16V
	303 453 8610	CERAMIC	0.1U K	16V
	303 453 8917	CERAMIC	0.1U K	16V
C1313	303 409 3426	CERAMIC	0.1U K	16V
	303 453 8610	CERAMIC	0.1U K	16V
	303 453 8917	CERAMIC	0.1U K	16V
C1321	303 383 5215	CERAMIC	4.7U K	6.3V
C1322	303 409 3426	CERAMIC	0.1U K	16V
	303 453 8610	CERAMIC	0.1U K	16V
	303 453 8917	CERAMIC	0.1U K	16V
C1323	303 409 3426	CERAMIC	0.1U K	16V
	303 453 8610	CERAMIC	0.1U K	16V
	303 453 8917	CERAMIC	0.1U K	16V
C1324	303 409 3426	CERAMIC	0.1U K	16V
	303 453 8610	CERAMIC	0.1U K	16V
	303 453 8917	CERAMIC	0.1U K	16V
C1326	303 409 3426	CERAMIC	0.1U K	16V
	303 453 8610	CERAMIC	0.1U K	16V
	303 453 8917	CERAMIC	0.1U K	16V
C1327	303 409 3426	CERAMIC	0.1U K	16V
	303 453 8610	CERAMIC	0.1U K	16V
	303 453 8917	CERAMIC	0.1U K	16V
C1328	303 409 3426	CERAMIC	0.1U K	16V
	303 453 8610	CERAMIC	0.1U K	16V
	303 453 8917	CERAMIC	0.1U K	16V
C1329	303 409 3426	CERAMIC	0.1U K	16V
	303 453 8610	CERAMIC	0.1U K	16V
	303 453 8917	CERAMIC	0.1U K	16V
C1331	303 276 1911	CERAMIC	22P J	50V
C1332	303 276 2819	CERAMIC	18P J	50V
	303 454 0712	CERAMIC	18P J	50V
C1333	303 409 3426	CERAMIC	0.1U K	16V
	303 453 8610	CERAMIC	0.1U K	16V
	303 453 8917	CERAMIC	0.1U K	16V
C1334	303 409 3426	CERAMIC	0.1U K	16V
	303 453 8610	CERAMIC	0.1U K	16V
	303 453 8917	CERAMIC	0.1U K	16V
C1335	303 409 3426	CERAMIC	0.1U K	16V
	303 453 8610	CERAMIC	0.1U K	16V
	303 453 8917	CERAMIC	0.1U K	16V
C1341	303 409 3426	CERAMIC	0.1U K	16V
	303 453 8610	CERAMIC	0.1U K	16V
	303 453 8917	CERAMIC	0.1U K	16V
C1342	303 441 9810	CERAMIC	0.01U K	50V
C1343	303 276 1317	CERAMIC	1000P K	50V
C1344	303 387 5310	ELECT	47U M	6.3V
	303 392 1215	ELECT	47U M	6.3V
C1391	303 409 3426	CERAMIC	0.1U K	16V
	303 453 8610	CERAMIC	0.1U K	16V
	303 453 8917	CERAMIC	0.1U K	16V
C2002	303 398 3312	ELECT	47U M	10V
C2003	303 449 1212	POS-SOLID	47U M	6.3V
C2201	303 409 3426	CERAMIC	0.1U K	16V
	303 453 8610	CERAMIC	0.1U K	16V
	303 453 8917	CERAMIC	0.1U K	16V
C2202	303 409 3426	CERAMIC	0.1U K	16V
	303 453 8610	CERAMIC	0.1U K	16V

Electrical Parts List

Key No.	Part No.	Description		
	303 453 8917	CERAMIC	0.1U K	16V
C2203	303 409 3426	CERAMIC	0.1U K	16V
	303 453 8610	CERAMIC	0.1U K	16V
	303 453 8917	CERAMIC	0.1U K	16V
C2204	303 409 3426	CERAMIC	0.1U K	16V
	303 453 8610	CERAMIC	0.1U K	16V
	303 453 8917	CERAMIC	0.1U K	16V
C2206	303 409 3426	CERAMIC	0.1U K	16V
	303 453 8610	CERAMIC	0.1U K	16V
	303 453 8917	CERAMIC	0.1U K	16V
C2207	303 409 3426	CERAMIC	0.1U K	16V
	303 453 8610	CERAMIC	0.1U K	16V
	303 453 8917	CERAMIC	0.1U K	16V
C2208	303 409 3426	CERAMIC	0.1U K	16V
	303 453 8610	CERAMIC	0.1U K	16V
	303 453 8917	CERAMIC	0.1U K	16V
C2211	303 409 3426	CERAMIC	0.1U K	16V
	303 453 8610	CERAMIC	0.1U K	16V
	303 453 8917	CERAMIC	0.1U K	16V
C2212	303 409 3426	CERAMIC	0.1U K	16V
	303 453 8610	CERAMIC	0.1U K	16V
	303 453 8917	CERAMIC	0.1U K	16V
C2213	303 409 3426	CERAMIC	0.1U K	16V
	303 453 8610	CERAMIC	0.1U K	16V
	303 453 8917	CERAMIC	0.1U K	16V
C2214	303 409 3426	CERAMIC	0.1U K	16V
	303 453 8610	CERAMIC	0.1U K	16V
	303 453 8917	CERAMIC	0.1U K	16V
C2216	303 409 3426	CERAMIC	0.1U K	16V
	303 453 8610	CERAMIC	0.1U K	16V
	303 453 8917	CERAMIC	0.1U K	16V
C2217	303 441 9810	CERAMIC	0.01U K	50V
C2218	303 409 3426	CERAMIC	0.1U K	16V
	303 453 8610	CERAMIC	0.1U K	16V
	303 453 8917	CERAMIC	0.1U K	16V
C2219	303 409 3426	CERAMIC	0.1U K	16V
	303 453 8610	CERAMIC	0.1U K	16V
	303 453 8917	CERAMIC	0.1U K	16V
C2221	303 409 3426	CERAMIC	0.1U K	16V
	303 453 8610	CERAMIC	0.1U K	16V
	303 453 8917	CERAMIC	0.1U K	16V
C2222	303 409 3426	CERAMIC	0.1U K	16V
	303 453 8610	CERAMIC	0.1U K	16V
	303 453 8917	CERAMIC	0.1U K	16V
C2223	303 409 3426	CERAMIC	0.1U K	16V
	303 453 8610	CERAMIC	0.1U K	16V
	303 453 8917	CERAMIC	0.1U K	16V
C2224	303 145 9918	CERAMIC	22P J	50V
C2226	303 145 9918	CERAMIC	22P J	50V
C2227	303 409 3426	CERAMIC	0.1U K	16V
	303 453 8610	CERAMIC	0.1U K	16V
	303 453 8917	CERAMIC	0.1U K	16V
C2228	303 409 3426	CERAMIC	0.1U K	16V
	303 453 8610	CERAMIC	0.1U K	16V
	303 453 8917	CERAMIC	0.1U K	16V
C2229	303 409 3426	CERAMIC	0.1U K	16V
	303 453 8610	CERAMIC	0.1U K	16V
	303 453 8917	CERAMIC	0.1U K	16V
C2231	303 370 0018	CERAMIC	10U K	6.3V
	303 368 7319	CERAMIC	10U K	6.3V
	303 358 3215	CERAMIC	10U K	6.3V
C2232	303 409 3426	CERAMIC	0.1U K	16V
	303 453 8610	CERAMIC	0.1U K	16V
	303 453 8917	CERAMIC	0.1U K	16V
C2233	303 409 3426	CERAMIC	0.1U K	16V
	303 453 8610	CERAMIC	0.1U K	16V
	303 453 8917	CERAMIC	0.1U K	16V
C2234	303 409 3426	CERAMIC	0.1U K	16V
	303 453 8610	CERAMIC	0.1U K	16V
	303 453 8917	CERAMIC	0.1U K	16V
C2236	303 409 3426	CERAMIC	0.1U K	16V
	303 453 8610	CERAMIC	0.1U K	16V
	303 453 8917	CERAMIC	0.1U K	16V
C2237	303 409 3426	CERAMIC	0.1U K	16V
	303 453 8610	CERAMIC	0.1U K	16V
	303 453 8917	CERAMIC	0.1U K	16V
C2238	303 409 3426	CERAMIC	0.1U K	16V
	303 453 8610	CERAMIC	0.1U K	16V
	303 453 8917	CERAMIC	0.1U K	16V
C2239	303 409 3426	CERAMIC	0.1U K	16V
	303 453 8610	CERAMIC	0.1U K	16V
	303 453 8917	CERAMIC	0.1U K	16V
C2241	303 409 3426	CERAMIC	0.1U K	16V
	303 453 8610	CERAMIC	0.1U K	16V
	303 453 8917	CERAMIC	0.1U K	16V
C2243	303 409 3426	CERAMIC	0.1U K	16V
	303 453 8610	CERAMIC	0.1U K	16V
	303 453 8917	CERAMIC	0.1U K	16V
C2244	303 370 0018	CERAMIC	10U K	6.3V
	303 368 7319	CERAMIC	10U K	6.3V
	303 358 3215	CERAMIC	10U K	6.3V
C2245	303 370 0018	CERAMIC	10U K	6.3V
	303 368 7319	CERAMIC	10U K	6.3V
	303 358 3215	CERAMIC	10U K	6.3V
C2891	303 409 3426	CERAMIC	0.1U K	16V
	303 453 8610	CERAMIC	0.1U K	16V
	303 453 8917	CERAMIC	0.1U K	16V
C2892	303 305 8812	CERAMIC	47P J	50V
	303 454 1610	CERAMIC	47P J	50V
	303 453 7217	CERAMIC	47P J	50V
C3001	303 294 6110	CERAMIC	100P J	50V
	303 454 0910	CERAMIC	100P J	50V
	303 453 6319	CERAMIC	100P J	50V
C301	303 409 3426	CERAMIC	0.1U K	16V
	303 453 8610	CERAMIC	0.1U K	16V
	303 453 8917	CERAMIC	0.1U K	16V
C3011	303 294 6110	CERAMIC	100P J	50V
	303 454 0910	CERAMIC	100P J	50V
	303 453 6319	CERAMIC	100P J	50V
C302	303 409 3426	CERAMIC	0.1U K	16V
	303 453 8610	CERAMIC	0.1U K	16V
	303 453 8917	CERAMIC	0.1U K	16V
C3021	303 294 6110	CERAMIC	100P J	50V
	303 454 0910	CERAMIC	100P J	50V
	303 453 6319	CERAMIC	100P J	50V
C303	303 409 3426	CERAMIC	0.1U K	16V
	303 453 8610	CERAMIC	0.1U K	16V
	303 453 8917	CERAMIC	0.1U K	16V
C3031	303 294 6110	CERAMIC	100P J	50V
	303 454 0910	CERAMIC	100P J	50V
	303 453 6319	CERAMIC	100P J	50V
C304	303 409 3426	CERAMIC	0.1U K	16V
	303 453 8610	CERAMIC	0.1U K	16V
	303 453 8917	CERAMIC	0.1U K	16V
C3051	303 454 0910	CERAMIC	100P J	50V
C3052	303 382 7814	CERAMIC	2.2U K	10V
C3053	303 409 3426	CERAMIC	0.1U K	16V
	303 453 8610	CERAMIC	0.1U K	16V
	303 453 8917	CERAMIC	0.1U K	16V
C306	303 409 3426	CERAMIC	0.1U K	16V
	303 453 8610	CERAMIC	0.1U K	16V
	303 453 8917	CERAMIC	0.1U K	16V
C3061	303 454 0910	CERAMIC	100P J	50V

Electrical Parts List

Key No.	Part No.	Description		
C307	403 455 1012	CERAMIC	1U K	10V
	303 433 1112	CERAMIC	1U K	10V
C308	303 409 3426	CERAMIC	0.1U K	16V
	303 453 8610	CERAMIC	0.1U K	16V
	303 453 8917	CERAMIC	0.1U K	16V
C309	303 409 3426	CERAMIC	0.1U K	16V
	303 453 8610	CERAMIC	0.1U K	16V
	303 453 8917	CERAMIC	0.1U K	16V
C311	303 409 3426	CERAMIC	0.1U K	16V
	303 453 8610	CERAMIC	0.1U K	16V
	303 453 8917	CERAMIC	0.1U K	16V
C312	303 409 3426	CERAMIC	0.1U K	16V
	303 453 8610	CERAMIC	0.1U K	16V
	303 453 8917	CERAMIC	0.1U K	16V
C313	303 409 3426	CERAMIC	0.1U K	16V
	303 453 8610	CERAMIC	0.1U K	16V
	303 453 8917	CERAMIC	0.1U K	16V
C314	303 409 3426	CERAMIC	0.1U K	16V
	303 453 8610	CERAMIC	0.1U K	16V
	303 453 8917	CERAMIC	0.1U K	16V
C315	303 409 3426	CERAMIC	0.1U K	16V
	303 453 8610	CERAMIC	0.1U K	16V
	303 453 8917	CERAMIC	0.1U K	16V
C316	303 409 3426	CERAMIC	0.1U K	16V
	303 453 8610	CERAMIC	0.1U K	16V
	303 453 8917	CERAMIC	0.1U K	16V
C317	303 409 3426	CERAMIC	0.1U K	16V
	303 453 8610	CERAMIC	0.1U K	16V
	303 453 8917	CERAMIC	0.1U K	16V
C318	303 409 3426	CERAMIC	0.1U K	16V
	303 453 8610	CERAMIC	0.1U K	16V
	303 453 8917	CERAMIC	0.1U K	16V
C319	303 409 3426	CERAMIC	0.1U K	16V
	303 453 8610	CERAMIC	0.1U K	16V
	303 453 8917	CERAMIC	0.1U K	16V
C321	403 455 1012	CERAMIC	1U K	10V
	303 433 1112	CERAMIC	1U K	10V
C322	303 409 3426	CERAMIC	0.1U K	16V
	303 453 8610	CERAMIC	0.1U K	16V
	303 453 8917	CERAMIC	0.1U K	16V
C323	303 409 3426	CERAMIC	0.1U K	16V
	303 453 8610	CERAMIC	0.1U K	16V
	303 453 8917	CERAMIC	0.1U K	16V
C324	403 455 1012	CERAMIC	1U K	10V
	303 433 1112	CERAMIC	1U K	10V
C325	303 409 3426	CERAMIC	0.1U K	16V
	303 453 8610	CERAMIC	0.1U K	16V
	303 453 8917	CERAMIC	0.1U K	16V
C326	303 409 3426	CERAMIC	0.1U K	16V
	303 453 8610	CERAMIC	0.1U K	16V
	303 453 8917	CERAMIC	0.1U K	16V
C327	303 409 3426	CERAMIC	0.1U K	16V
	303 453 8610	CERAMIC	0.1U K	16V
	303 453 8917	CERAMIC	0.1U K	16V
C328	303 409 3426	CERAMIC	0.1U K	16V
	303 453 8610	CERAMIC	0.1U K	16V
	303 453 8917	CERAMIC	0.1U K	16V
C329	403 455 1012	CERAMIC	1U K	10V
	303 433 1112	CERAMIC	1U K	10V
C331	403 455 1012	CERAMIC	1U K	10V
	303 433 1112	CERAMIC	1U K	10V
C332	303 409 3426	CERAMIC	0.1U K	16V
	303 453 8610	CERAMIC	0.1U K	16V
	303 453 8917	CERAMIC	0.1U K	16V
C333	303 409 3426	CERAMIC	0.1U K	16V
	303 453 8610	CERAMIC	0.1U K	16V
	303 453 8917	CERAMIC	0.1U K	16V
C334	303 409 3426	CERAMIC	0.1U K	16V
	303 453 8610	CERAMIC	0.1U K	16V
	303 453 8917	CERAMIC	0.1U K	16V
C336	303 409 3426	CERAMIC	0.1U K	16V
	303 453 8610	CERAMIC	0.1U K	16V
	303 453 8917	CERAMIC	0.1U K	16V
C337	303 409 3426	CERAMIC	0.1U K	16V
	303 453 8610	CERAMIC	0.1U K	16V
	303 453 8917	CERAMIC	0.1U K	16V
C338	303 409 3426	CERAMIC	0.1U K	16V
	303 453 8610	CERAMIC	0.1U K	16V
	303 453 8917	CERAMIC	0.1U K	16V
C339	303 409 3426	CERAMIC	0.1U K	16V
	303 453 8610	CERAMIC	0.1U K	16V
	303 453 8917	CERAMIC	0.1U K	16V
C341	303 409 3426	CERAMIC	0.1U K	16V
	303 453 8610	CERAMIC	0.1U K	16V
	303 453 8917	CERAMIC	0.1U K	16V
C342	303 409 3426	CERAMIC	0.1U K	16V
	303 453 8610	CERAMIC	0.1U K	16V
	303 453 8917	CERAMIC	0.1U K	16V
C343	303 409 3426	CERAMIC	0.1U K	16V
	303 453 8610	CERAMIC	0.1U K	16V
	303 453 8917	CERAMIC	0.1U K	16V
C344	303 409 3426	CERAMIC	0.1U K	16V
	303 453 8610	CERAMIC	0.1U K	16V
	303 453 8917	CERAMIC	0.1U K	16V
C346	403 455 1012	CERAMIC	1U K	10V
	303 433 1112	CERAMIC	1U K	10V
C347	303 409 3426	CERAMIC	0.1U K	16V
	303 453 8610	CERAMIC	0.1U K	16V
	303 453 8917	CERAMIC	0.1U K	16V
C348	303 409 3426	CERAMIC	0.1U K	16V
	303 453 8610	CERAMIC	0.1U K	16V
	303 453 8917	CERAMIC	0.1U K	16V
C349	403 455 1012	CERAMIC	1U K	10V
	303 433 1112	CERAMIC	1U K	10V
C3501	303 396 9613	CERAMIC	1U K	25V
	303 397 7618	CERAMIC	1U K	25V
	403 478 5912	CERAMIC	1U K	25V
C3502	303 396 9613	CERAMIC	1U K	25V
	303 397 7618	CERAMIC	1U K	25V
	403 478 5912	CERAMIC	1U K	25V
C3503	403 467 0911	CERAMIC	0.1U K	25V
C3504	303 396 9613	CERAMIC	1U K	25V
	303 397 7618	CERAMIC	1U K	25V
	403 478 5912	CERAMIC	1U K	25V
C3506	303 369 3211	ELECT	100U M	16V
	303 381 5316	ELECT	100U M	16V
C3508	303 437 4614	CERAMIC	10U K	25V
C3509	303 396 9613	CERAMIC	1U K	25V
	303 397 7618	CERAMIC	1U K	25V
	403 478 5912	CERAMIC	1U K	25V
C351	303 409 3426	CERAMIC	0.1U K	16V
	303 453 8610	CERAMIC	0.1U K	16V
	303 453 8917	CERAMIC	0.1U K	16V
C352	403 455 1012	CERAMIC	1U K	10V
	303 433 1112	CERAMIC	1U K	10V
C3524	303 157 4215	CERAMIC	220P J	50V
C353	303 409 3426	CERAMIC	0.1U K	16V
	303 453 8610	CERAMIC	0.1U K	16V
	303 453 8917	CERAMIC	0.1U K	16V
C3531	303 396 9613	CERAMIC	1U K	25V
	303 397 7618	CERAMIC	1U K	25V
	403 478 5912	CERAMIC	1U K	25V
C3532	303 396 9613	CERAMIC	1U K	25V

Electrical Parts List

Key No.	Part No.	Description		
	303 397 7618	CERAMIC	1U K	25V
	403 478 5912	CERAMIC	1U K	25V
C3533	403 467 0911	CERAMIC	0.1U K	25V
C3534	303 396 9613	CERAMIC	1U K	25V
	303 397 7618	CERAMIC	1U K	25V
	403 478 5912	CERAMIC	1U K	25V
C3536	303 369 3211	ELECT	100U M	16V
	303 381 5316	ELECT	100U M	16V
C3538	303 437 4614	CERAMIC	10U K	25V
C3539	303 396 9613	CERAMIC	1U K	25V
	303 397 7618	CERAMIC	1U K	25V
	403 478 5912	CERAMIC	1U K	25V
C354	303 409 3426	CERAMIC	0.1U K	16V
	303 453 8610	CERAMIC	0.1U K	16V
	303 453 8917	CERAMIC	0.1U K	16V
C3554	303 157 4215	CERAMIC	220P J	50V
C356	303 409 3426	CERAMIC	0.1U K	16V
	303 453 8610	CERAMIC	0.1U K	16V
	303 453 8917	CERAMIC	0.1U K	16V
C3561	303 396 9613	CERAMIC	1U K	25V
	303 397 7618	CERAMIC	1U K	25V
	403 478 5912	CERAMIC	1U K	25V
C3562	303 396 9613	CERAMIC	1U K	25V
	303 397 7618	CERAMIC	1U K	25V
	403 478 5912	CERAMIC	1U K	25V
C3563	403 467 0911	CERAMIC	0.1U K	25V
C3564	303 396 9613	CERAMIC	1U K	25V
	303 397 7618	CERAMIC	1U K	25V
	403 478 5912	CERAMIC	1U K	25V
C3566	303 369 3211	ELECT	100U M	16V
	303 381 5316	ELECT	100U M	16V
C3568	303 437 4614	CERAMIC	10U K	25V
C3569	303 409 3426	CERAMIC	0.1U K	16V
	303 453 8610	CERAMIC	0.1U K	16V
	303 453 8917	CERAMIC	0.1U K	16V
C357	303 409 3426	CERAMIC	0.1U K	16V
	303 453 8610	CERAMIC	0.1U K	16V
	303 453 8917	CERAMIC	0.1U K	16V
C358	303 409 3426	CERAMIC	0.1U K	16V
	303 453 8610	CERAMIC	0.1U K	16V
	303 453 8917	CERAMIC	0.1U K	16V
C3584	303 157 4215	CERAMIC	220P J	50V
C359	303 409 3426	CERAMIC	0.1U K	16V
	303 453 8610	CERAMIC	0.1U K	16V
	303 453 8917	CERAMIC	0.1U K	16V
C3598	303 394 5815	CERAMIC	4.7U K	16V
C3599	403 455 1012	CERAMIC	1U K	10V
	303 433 1112	CERAMIC	1U K	10V
C360	403 455 1616	CERAMIC	10U K	16V
	403 478 5813	CERAMIC	10U K	16V
C361	303 409 3426	CERAMIC	0.1U K	16V
	303 453 8610	CERAMIC	0.1U K	16V
	303 453 8917	CERAMIC	0.1U K	16V
C362	303 409 3426	CERAMIC	0.1U K	16V
	303 453 8610	CERAMIC	0.1U K	16V
	303 453 8917	CERAMIC	0.1U K	16V
C3621	403 455 1616	CERAMIC	10U K	16V
	403 478 5813	CERAMIC	10U K	16V
C3622	403 455 1616	CERAMIC	10U K	16V
	403 478 5813	CERAMIC	10U K	16V
C3623	403 455 1616	CERAMIC	10U K	16V
	403 478 5813	CERAMIC	10U K	16V
C3625	403 455 1616	CERAMIC	10U K	16V
	403 478 5813	CERAMIC	10U K	16V
C3626	403 455 1616	CERAMIC	10U K	16V
	403 478 5813	CERAMIC	10U K	16V
C3627	403 455 1616	CERAMIC	10U K	16V

Key No.	Part No.	Description		
	403 478 5813	CERAMIC	10U K	16V
C363	303 409 3426	CERAMIC	0.1U K	16V
	303 453 8610	CERAMIC	0.1U K	16V
	303 453 8917	CERAMIC	0.1U K	16V
C364	303 409 3426	CERAMIC	0.1U K	16V
	303 453 8610	CERAMIC	0.1U K	16V
	303 453 8917	CERAMIC	0.1U K	16V
C365	403 455 1616	CERAMIC	10U K	16V
	403 478 5813	CERAMIC	10U K	16V
C366	303 409 3426	CERAMIC	0.1U K	16V
	303 453 8610	CERAMIC	0.1U K	16V
	303 453 8917	CERAMIC	0.1U K	16V
C367	403 455 1012	CERAMIC	1U K	10V
	303 433 1112	CERAMIC	1U K	10V
C368	303 409 3426	CERAMIC	0.1U K	16V
	303 453 8610	CERAMIC	0.1U K	16V
	303 453 8917	CERAMIC	0.1U K	16V
C369	303 409 3426	CERAMIC	0.1U K	16V
	303 453 8610	CERAMIC	0.1U K	16V
	303 453 8917	CERAMIC	0.1U K	16V
C370	403 455 1616	CERAMIC	10U K	16V
	403 478 5813	CERAMIC	10U K	16V
C371	303 409 3426	CERAMIC	0.1U K	16V
	303 453 8610	CERAMIC	0.1U K	16V
	303 453 8917	CERAMIC	0.1U K	16V
C372	303 370 0018	CERAMIC	10U K	6.3V
	303 368 7319	CERAMIC	10U K	6.3V
	303 358 3215	CERAMIC	10U K	6.3V
C373	303 409 3426	CERAMIC	0.1U K	16V
	303 453 8610	CERAMIC	0.1U K	16V
	303 453 8917	CERAMIC	0.1U K	16V
C374	403 455 1012	CERAMIC	1U K	10V
	303 433 1112	CERAMIC	1U K	10V
C375	403 455 1616	CERAMIC	10U K	16V
	403 478 5813	CERAMIC	10U K	16V
C376	303 409 3426	CERAMIC	0.1U K	16V
	303 453 8610	CERAMIC	0.1U K	16V
	303 453 8917	CERAMIC	0.1U K	16V
C377	403 455 1012	CERAMIC	1U K	10V
	303 433 1112	CERAMIC	1U K	10V
C378	303 409 3426	CERAMIC	0.1U K	16V
	303 453 8610	CERAMIC	0.1U K	16V
	303 453 8917	CERAMIC	0.1U K	16V
C379	403 455 1012	CERAMIC	1U K	10V
	303 433 1112	CERAMIC	1U K	10V
C380	403 455 1012	CERAMIC	1U K	10V
	303 433 1112	CERAMIC	1U K	10V
C3801	403 455 1012	CERAMIC	1U K	10V
	303 433 1112	CERAMIC	1U K	10V
C3802	403 455 1012	CERAMIC	1U K	10V
	303 433 1112	CERAMIC	1U K	10V
C3803	403 455 1012	CERAMIC	1U K	10V
	303 433 1112	CERAMIC	1U K	10V
C3804	403 455 1012	CERAMIC	1U K	10V
	303 433 1112	CERAMIC	1U K	10V
C3806	403 455 1012	CERAMIC	1U K	10V
	303 433 1112	CERAMIC	1U K	10V
C3807	303 409 3426	CERAMIC	0.1U K	16V
	303 453 8610	CERAMIC	0.1U K	16V
	303 453 8917	CERAMIC	0.1U K	16V
C3808	303 409 3426	CERAMIC	0.1U K	16V
	303 453 8610	CERAMIC	0.1U K	16V
	303 453 8917	CERAMIC	0.1U K	16V
C3809	303 409 3426	CERAMIC	0.1U K	16V
	303 453 8610	CERAMIC	0.1U K	16V
	303 453 8917	CERAMIC	0.1U K	16V
C381	303 409 3426	CERAMIC	0.1U K	16V

Electrical Parts List

Key No.	Part No.	Description		
	303 453 8610	CERAMIC	0.1U K	16V
	303 453 8917	CERAMIC	0.1U K	16V
C382	403 455 1012	CERAMIC	1U K	10V
	303 433 1112	CERAMIC	1U K	10V
C383	303 409 3426	CERAMIC	0.1U K	16V
	303 453 8610	CERAMIC	0.1U K	16V
	303 453 8917	CERAMIC	0.1U K	16V
C384	303 409 3426	CERAMIC	0.1U K	16V
	303 453 8610	CERAMIC	0.1U K	16V
	303 453 8917	CERAMIC	0.1U K	16V
C385	303 409 3426	CERAMIC	0.1U K	16V
	303 453 8610	CERAMIC	0.1U K	16V
	303 453 8917	CERAMIC	0.1U K	16V
C3851	303 409 3426	CERAMIC	0.1U K	16V
	303 453 8610	CERAMIC	0.1U K	16V
	303 453 8917	CERAMIC	0.1U K	16V
C3857	303 370 0018	CERAMIC	10U K	6.3V
	303 368 7319	CERAMIC	10U K	6.3V
	303 358 3215	CERAMIC	10U K	6.3V
C3858	303 409 3426	CERAMIC	0.1U K	16V
	303 453 8610	CERAMIC	0.1U K	16V
	303 453 8917	CERAMIC	0.1U K	16V
C386	403 455 1012	CERAMIC	1U K	10V
	303 433 1112	CERAMIC	1U K	10V
C387	403 455 1012	CERAMIC	1U K	10V
	303 433 1112	CERAMIC	1U K	10V
C389	303 409 3426	CERAMIC	0.1U K	16V
	303 453 8610	CERAMIC	0.1U K	16V
	303 453 8917	CERAMIC	0.1U K	16V
C391	303 409 3426	CERAMIC	0.1U K	16V
	303 453 8610	CERAMIC	0.1U K	16V
	303 453 8917	CERAMIC	0.1U K	16V
C392	303 409 3426	CERAMIC	0.1U K	16V
	303 453 8610	CERAMIC	0.1U K	16V
	303 453 8917	CERAMIC	0.1U K	16V
C393	303 409 3426	CERAMIC	0.1U K	16V
	303 453 8610	CERAMIC	0.1U K	16V
	303 453 8917	CERAMIC	0.1U K	16V
C396	303 409 3426	CERAMIC	0.1U K	16V
	303 453 8610	CERAMIC	0.1U K	16V
	303 453 8917	CERAMIC	0.1U K	16V
C397	403 455 1012	CERAMIC	1U K	10V
	303 433 1112	CERAMIC	1U K	10V
C398	303 409 3426	CERAMIC	0.1U K	16V
	303 453 8610	CERAMIC	0.1U K	16V
	303 453 8917	CERAMIC	0.1U K	16V
C399	303 409 3426	CERAMIC	0.1U K	16V
	303 453 8610	CERAMIC	0.1U K	16V
	303 453 8917	CERAMIC	0.1U K	16V
C4001	303 409 3426	CERAMIC	0.1U K	16V
	303 453 8610	CERAMIC	0.1U K	16V
	303 453 8917	CERAMIC	0.1U K	16V
C4002	303 409 3426	CERAMIC	0.1U K	16V
	303 453 8610	CERAMIC	0.1U K	16V
	303 453 8917	CERAMIC	0.1U K	16V
C4003	303 382 7814	CERAMIC	2.2U K	10V
C4004	303 382 7814	CERAMIC	2.2U K	10V
C401	303 282 5118	CERAMIC	470P K	50V
	303 453 9211	CERAMIC	470P K	50V
	303 453 8719	CERAMIC	470P K	50V
C402	303 409 3426	CERAMIC	0.1U K	16V
	303 453 8610	CERAMIC	0.1U K	16V
	303 453 8917	CERAMIC	0.1U K	16V
C403	303 282 5118	CERAMIC	470P K	50V
	303 453 9211	CERAMIC	470P K	50V
	303 453 8719	CERAMIC	470P K	50V
C404	303 409 3426	CERAMIC	0.1U K	16V
	303 453 8610	CERAMIC	0.1U K	16V
	303 453 8917	CERAMIC	0.1U K	16V
C406	303 409 3426	CERAMIC	0.1U K	16V
	303 453 8610	CERAMIC	0.1U K	16V
	303 453 8917	CERAMIC	0.1U K	16V
C407	303 282 5118	CERAMIC	470P K	50V
	303 453 9211	CERAMIC	470P K	50V
	303 453 8719	CERAMIC	470P K	50V
C411	303 409 3426	CERAMIC	0.1U K	16V
	303 453 8610	CERAMIC	0.1U K	16V
	303 453 8917	CERAMIC	0.1U K	16V
C412	303 409 3426	CERAMIC	0.1U K	16V
	303 453 8610	CERAMIC	0.1U K	16V
	303 453 8917	CERAMIC	0.1U K	16V
C413	303 282 5118	CERAMIC	470P K	50V
	303 453 9211	CERAMIC	470P K	50V
	303 453 8719	CERAMIC	470P K	50V
C414	303 409 3426	CERAMIC	0.1U K	16V
	303 453 8610	CERAMIC	0.1U K	16V
	303 453 8917	CERAMIC	0.1U K	16V
C416	303 409 3426	CERAMIC	0.1U K	16V
	303 453 8610	CERAMIC	0.1U K	16V
	303 453 8917	CERAMIC	0.1U K	16V
C417	303 370 0216	CERAMIC	2.2U K	6.3V
C421	303 282 5118	CERAMIC	470P K	50V
	303 453 9211	CERAMIC	470P K	50V
	303 453 8719	CERAMIC	470P K	50V
C422	403 455 1012	CERAMIC	1U K	10V
	303 433 1112	CERAMIC	1U K	10V
C423	303 282 5118	CERAMIC	470P K	50V
	303 453 9211	CERAMIC	470P K	50V
	303 453 8719	CERAMIC	470P K	50V
C424	403 455 1012	CERAMIC	1U K	10V
	303 433 1112	CERAMIC	1U K	10V
C426	403 455 1012	CERAMIC	1U K	10V
	303 433 1112	CERAMIC	1U K	10V
C427	303 282 5118	CERAMIC	470P K	50V
	303 453 9211	CERAMIC	470P K	50V
	303 453 8719	CERAMIC	470P K	50V
C431	303 282 5118	CERAMIC	470P K	50V
	303 453 9211	CERAMIC	470P K	50V
	303 453 8719	CERAMIC	470P K	50V
C432	303 409 3426	CERAMIC	0.1U K	16V
	303 453 8610	CERAMIC	0.1U K	16V
	303 453 8917	CERAMIC	0.1U K	16V
C433	303 282 5118	CERAMIC	470P K	50V
	303 453 9211	CERAMIC	470P K	50V
	303 453 8719	CERAMIC	470P K	50V
C434	303 409 3426	CERAMIC	0.1U K	16V
	303 453 8610	CERAMIC	0.1U K	16V
	303 453 8917	CERAMIC	0.1U K	16V
C436	303 409 3426	CERAMIC	0.1U K	16V
	303 453 8610	CERAMIC	0.1U K	16V
	303 453 8917	CERAMIC	0.1U K	16V
C437	303 409 3426	CERAMIC	0.1U K	16V
	303 453 8610	CERAMIC	0.1U K	16V
	303 453 8917	CERAMIC	0.1U K	16V
C438	303 441 9810	CERAMIC	0.01U K	50V
C439	403 455 1012	CERAMIC	1U K	10V
	303 433 1112	CERAMIC	1U K	10V
C441	403 455 1616	CERAMIC	10U K	16V
	403 478 5813	CERAMIC	10U K	16V
C442	403 455 1012	CERAMIC	1U K	10V
	303 433 1112	CERAMIC	1U K	10V
C443	303 370 0216	CERAMIC	2.2U K	6.3V
C480	303 370 0018	CERAMIC	10U K	6.3V
	303 368 7319	CERAMIC	10U K	6.3V

Electrical Parts List

Key No.	Part No.	Description		
	303 358 3215	CERAMIC	10U K	6.3V
C4805	303 409 3426	CERAMIC	0.1U K	16V
	303 453 8610	CERAMIC	0.1U K	16V
	303 453 8917	CERAMIC	0.1U K	16V
C4808	303 370 0018	CERAMIC	10U K	6.3V
	303 368 7319	CERAMIC	10U K	6.3V
	303 358 3215	CERAMIC	10U K	6.3V
C481	303 370 0018	CERAMIC	10U K	6.3V
	303 368 7319	CERAMIC	10U K	6.3V
	303 358 3215	CERAMIC	10U K	6.3V
C482	303 370 0018	CERAMIC	10U K	6.3V
	303 368 7319	CERAMIC	10U K	6.3V
	303 358 3215	CERAMIC	10U K	6.3V
C483	303 370 0018	CERAMIC	10U K	6.3V
	303 368 7319	CERAMIC	10U K	6.3V
	303 358 3215	CERAMIC	10U K	6.3V
C5001	303 396 9613	CERAMIC	1U K	25V
	303 397 7618	CERAMIC	1U K	25V
	403 478 5912	CERAMIC	1U K	25V
C5002	303 396 9613	CERAMIC	1U K	25V
	303 397 7618	CERAMIC	1U K	25V
	403 478 5912	CERAMIC	1U K	25V
C5020	303 396 9613	CERAMIC	1U K	25V
	303 397 7618	CERAMIC	1U K	25V
	403 478 5912	CERAMIC	1U K	25V
C5021	303 396 9613	CERAMIC	1U K	25V
	303 397 7618	CERAMIC	1U K	25V
	403 478 5912	CERAMIC	1U K	25V
C5022	303 409 3426	CERAMIC	0.1U K	16V
	303 453 8610	CERAMIC	0.1U K	16V
	303 453 8917	CERAMIC	0.1U K	16V
C5023	303 139 6916	CERAMIC	1P C	50V
C5025	303 396 9613	CERAMIC	1U K	25V
	303 397 7618	CERAMIC	1U K	25V
	403 478 5912	CERAMIC	1U K	25V
C5026	303 396 9613	CERAMIC	1U K	25V
	303 397 7618	CERAMIC	1U K	25V
	403 478 5912	CERAMIC	1U K	25V
C5027	403 455 1012	CERAMIC	1U K	10V
	303 433 1112	CERAMIC	1U K	10V
C5028	403 455 1012	CERAMIC	1U K	10V
	303 433 1112	CERAMIC	1U K	10V
C5029	403 455 1012	CERAMIC	1U K	10V
	303 433 1112	CERAMIC	1U K	10V
C503	303 409 3426	CERAMIC	0.1U K	16V
	303 453 8610	CERAMIC	0.1U K	16V
	303 453 8917	CERAMIC	0.1U K	16V
C5030	403 455 1012	CERAMIC	1U K	10V
	303 433 1112	CERAMIC	1U K	10V
C5031	403 455 1012	CERAMIC	1U K	10V
	303 433 1112	CERAMIC	1U K	10V
C5032	303 139 6916	CERAMIC	1P C	50V
C5033	303 139 6916	CERAMIC	1P C	50V
C5034	403 455 1012	CERAMIC	1U K	10V
	303 433 1112	CERAMIC	1U K	10V
C5035	403 455 1012	CERAMIC	1U K	10V
	303 433 1112	CERAMIC	1U K	10V
C5036	403 455 1012	CERAMIC	1U K	10V
	303 433 1112	CERAMIC	1U K	10V
C5037	303 139 6916	CERAMIC	1P C	50V
C5038	303 454 0613	CERAMIC	10000P K	50V
C5039	303 454 0613	CERAMIC	10000P K	50V
C504	303 409 3426	CERAMIC	0.1U K	16V
	303 453 8610	CERAMIC	0.1U K	16V
	303 453 8917	CERAMIC	0.1U K	16V
C5040	303 409 3426	CERAMIC	0.1U K	16V
	303 453 8610	CERAMIC	0.1U K	16V
	303 453 8917	CERAMIC	0.1U K	16V
C5041	303 454 0613	CERAMIC	10000P K	50V
C5042	403 455 1012	CERAMIC	1U K	10V
	303 433 1112	CERAMIC	1U K	10V
C5043	403 455 1012	CERAMIC	1U K	10V
	303 433 1112	CERAMIC	1U K	10V
C5044	303 409 3426	CERAMIC	0.1U K	16V
	303 453 8610	CERAMIC	0.1U K	16V
	303 453 8917	CERAMIC	0.1U K	16V
C5045	303 358 3215	CERAMIC	10U K	6.3V
C5046	403 455 1012	CERAMIC	1U K	10V
	303 433 1112	CERAMIC	1U K	10V
C5047	303 409 3426	CERAMIC	0.1U K	16V
	303 453 8610	CERAMIC	0.1U K	16V
	303 453 8917	CERAMIC	0.1U K	16V
C5048	303 409 3426	CERAMIC	0.1U K	16V
	303 453 8610	CERAMIC	0.1U K	16V
	303 453 8917	CERAMIC	0.1U K	16V
C5049	303 409 3426	CERAMIC	0.1U K	16V
	303 453 8610	CERAMIC	0.1U K	16V
	303 453 8917	CERAMIC	0.1U K	16V
C5050	303 409 3426	CERAMIC	0.1U K	16V
	303 453 8610	CERAMIC	0.1U K	16V
	303 453 8917	CERAMIC	0.1U K	16V
C5051	303 409 3426	CERAMIC	0.1U K	16V
	303 453 8610	CERAMIC	0.1U K	16V
	303 453 8917	CERAMIC	0.1U K	16V
C5052	303 401 2219	ELECT	100U M	6.3V
C5053	403 467 0911	CERAMIC	0.1U K	25V
C5054	303 437 4614	CERAMIC	10U K	25V
C5055	303 437 4614	CERAMIC	10U K	25V
C5058	403 455 1012	CERAMIC	1U K	10V
	303 433 1112	CERAMIC	1U K	10V
C5059	403 455 1012	CERAMIC	1U K	10V
	303 433 1112	CERAMIC	1U K	10V
C5060	303 370 0018	CERAMIC	10U K	6.3V
	303 368 7319	CERAMIC	10U K	6.3V
	303 358 3215	CERAMIC	10U K	6.3V
C5061	403 455 1616	CERAMIC	10U K	16V
	403 478 5813	CERAMIC	10U K	16V
C5062	303 409 3426	CERAMIC	0.1U K	16V
	303 453 8610	CERAMIC	0.1U K	16V
	303 453 8917	CERAMIC	0.1U K	16V
C5063	303 409 3426	CERAMIC	0.1U K	16V
	303 453 8610	CERAMIC	0.1U K	16V
	303 453 8917	CERAMIC	0.1U K	16V
C5066	303 409 3426	CERAMIC	0.1U K	16V
	303 453 8610	CERAMIC	0.1U K	16V
	303 453 8917	CERAMIC	0.1U K	16V
C5069	403 455 1616	CERAMIC	10U K	16V
	403 478 5813	CERAMIC	10U K	16V
C507	403 455 1616	CERAMIC	10U K	16V
	403 478 5813	CERAMIC	10U K	16V
C5075	403 455 1012	CERAMIC	1U K	10V
	303 433 1112	CERAMIC	1U K	10V
C508	303 419 5219	ELECT	47.0UM	25V
	303 401 4312	ELECT	47U M	25V
C509	303 372 7510	CERAMIC	2.2U K	6.3V
C511	303 397 8219	CERAMIC	2.2U K	25V
C512	403 467 0911	CERAMIC	0.1U K	25V
C513	403 467 0911	CERAMIC	0.1U K	25V
C514	403 467 0911	CERAMIC	0.1U K	25V
C516	403 467 0911	CERAMIC	0.1U K	25V
C517	403 467 0911	CERAMIC	0.1U K	25V
C519	403 467 0911	CERAMIC	0.1U K	25V
C521	303 396 9613	CERAMIC	1U K	25V
	303 397 7618	CERAMIC	1U K	25V

Electrical Parts List

Key No.	Part No.	Description		
	403 478 5912	CERAMIC	1U K	25V
C523	303 342 3313	CERAMIC	0.1U K	25V
C524	303 342 3313	CERAMIC	0.1U K	25V
C527	403 467 0911	CERAMIC	0.1U K	25V
C528	403 467 0911	CERAMIC	0.1U K	25V
C5315	303 409 3426	CERAMIC	0.1U K	16V
	303 453 8610	CERAMIC	0.1U K	16V
	303 453 8917	CERAMIC	0.1U K	16V
C533	303 409 3426	CERAMIC	0.1U K	16V
	303 453 8610	CERAMIC	0.1U K	16V
	303 453 8917	CERAMIC	0.1U K	16V
C5331	303 370 0216	CERAMIC	2.2U K	6.3V
C5332	303 409 3426	CERAMIC	0.1U K	16V
	303 453 8610	CERAMIC	0.1U K	16V
	303 453 8917	CERAMIC	0.1U K	16V
C5334	303 320 0419	CERAMIC	68P J	50V
	303 454 0019	CERAMIC	68P J	50V
	303 453 6814	CERAMIC	68P J	50V
C5336	303 309 2519	CERAMIC	27P J	50V
	403 456 4616	CERAMIC	27P J	50V
C5337	303 294 6110	CERAMIC	100P J	50V
C5338	303 409 3426	CERAMIC	0.1U K	16V
	303 453 8610	CERAMIC	0.1U K	16V
	303 453 8917	CERAMIC	0.1U K	16V
C534	303 409 3426	CERAMIC	0.1U K	16V
	303 453 8610	CERAMIC	0.1U K	16V
	303 453 8917	CERAMIC	0.1U K	16V
C537	403 455 1616	CERAMIC	10U K	16V
	403 478 5813	CERAMIC	10U K	16V
C538	303 419 5219	ELECT	47.0UM	25V
	303 401 4312	ELECT	47U M	25V
C539	303 372 7510	CERAMIC	2.2U K	6.3V
C541	303 397 8219	CERAMIC	2.2U K	25V
C542	403 467 0911	CERAMIC	0.1U K	25V
C543	403 467 0911	CERAMIC	0.1U K	25V
C544	403 467 0911	CERAMIC	0.1U K	25V
C546	403 467 0911	CERAMIC	0.1U K	25V
C547	403 467 0911	CERAMIC	0.1U K	25V
C549	403 467 0911	CERAMIC	0.1U K	25V
C551	303 409 3426	CERAMIC	0.1U K	16V
	303 453 8610	CERAMIC	0.1U K	16V
	303 453 8917	CERAMIC	0.1U K	16V
C553	303 342 3313	CERAMIC	0.1U K	25V
C554	303 342 3313	CERAMIC	0.1U K	25V
C557	403 467 0911	CERAMIC	0.1U K	25V
C558	403 467 0911	CERAMIC	0.1U K	25V
C5611	303 396 9613	CERAMIC	1U K	25V
	303 397 7618	CERAMIC	1U K	25V
	403 478 5912	CERAMIC	1U K	25V
C5612	303 372 7510	CERAMIC	2.2U K	6.3V
C5614	403 455 1012	CERAMIC	1U K	10V
	303 433 1112	CERAMIC	1U K	10V
C5621	303 383 5215	CERAMIC	4.7U K	6.3V
C5623	303 383 5215	CERAMIC	4.7U K	6.3V
C563	303 409 3426	CERAMIC	0.1U K	16V
	303 453 8610	CERAMIC	0.1U K	16V
	303 453 8917	CERAMIC	0.1U K	16V
C5636	303 424 0315	ELECT	100U M	6.3V
	303 401 2219	ELECT	100U M	6.3V
	403 458 7219	ELECT	100U M	6.3V
C5637	303 409 3426	CERAMIC	0.1U K	16V
	303 453 8610	CERAMIC	0.1U K	16V
	303 453 8917	CERAMIC	0.1U K	16V
C564	303 409 3426	CERAMIC	0.1U K	16V
	303 453 8610	CERAMIC	0.1U K	16V
	303 453 8917	CERAMIC	0.1U K	16V
C5667	403 455 1012	CERAMIC	1U K	10V

Key No.	Part No.	Description		
	303 433 1112	CERAMIC	1U K	10V
C567	403 455 1616	CERAMIC	10U K	16V
	403 478 5813	CERAMIC	10U K	16V
C568	303 419 5219	ELECT	47.0UM	25V
	303 401 4312	ELECT	47U M	25V
C569	303 372 7510	CERAMIC	2.2U K	6.3V
C5704	303 372 7510	CERAMIC	2.2U K	6.3V
C5705	303 401 4312	ELECT	47U M	25V
C5706	303 409 3426	CERAMIC	0.1U K	16V
	303 453 8610	CERAMIC	0.1U K	16V
	303 453 8917	CERAMIC	0.1U K	16V
C5707	303 324 6417	CERAMIC	0.022U K	16V
C5708	303 397 5713	ELECT	100U M	10V
C571	303 397 8219	CERAMIC	2.2U K	25V
C572	403 467 0911	CERAMIC	0.1U K	25V
C573	403 467 0911	CERAMIC	0.1U K	25V
C574	403 467 0911	CERAMIC	0.1U K	25V
C5751	303 382 7814	CERAMIC	2.2U K	10V
C576	403 467 0911	CERAMIC	0.1U K	25V
C577	403 467 0911	CERAMIC	0.1U K	25V
C579	403 467 0911	CERAMIC	0.1U K	25V
C581	303 409 3426	CERAMIC	0.1U K	16V
	303 453 8610	CERAMIC	0.1U K	16V
	303 453 8917	CERAMIC	0.1U K	16V
C5821	403 455 1616	CERAMIC	10U K	16V
	403 478 5813	CERAMIC	10U K	16V
C5822	403 455 1616	CERAMIC	10U K	16V
	403 478 5813	CERAMIC	10U K	16V
C5823	303 454 1917	CERAMIC	4700P K	50V
C5824	303 392 5015	CERAMIC	22U M	6.3V
C5825	403 455 1616	CERAMIC	10U K	16V
	403 478 5813	CERAMIC	10U K	16V
C583	303 342 3313	CERAMIC	0.1U K	25V
C584	303 342 3313	CERAMIC	0.1U K	25V
C5841	403 455 1012	CERAMIC	1U K	10V
	303 433 1112	CERAMIC	1U K	10V
C5852	303 370 0018	CERAMIC	10U K	6.3V
	303 368 7319	CERAMIC	10U K	6.3V
	303 358 3215	CERAMIC	10U K	6.3V
C5853	303 409 3426	CERAMIC	0.1U K	16V
	303 453 8610	CERAMIC	0.1U K	16V
	303 453 8917	CERAMIC	0.1U K	16V
C5854	303 387 5112	ELECT	220U M	6.3V
	303 394 9318	ELECT	220U M	6.3V
C5855	303 409 3426	CERAMIC	0.1U K	16V
	303 453 8610	CERAMIC	0.1U K	16V
	303 453 8917	CERAMIC	0.1U K	16V
C5860	403 455 1012	CERAMIC	1U K	10V
	303 433 1112	CERAMIC	1U K	10V
C5862	403 455 1616	CERAMIC	10U K	16V
	403 478 5813	CERAMIC	10U K	16V
C5863	403 455 1616	CERAMIC	10U K	16V
	403 478 5813	CERAMIC	10U K	16V
C5864	403 455 1616	CERAMIC	10U K	16V
	403 478 5813	CERAMIC	10U K	16V
C5867	303 392 5015	CERAMIC	22U M	6.3V
C5868	303 392 1215	ELECT	47U M	6.3V
C5869	303 392 5015	CERAMIC	22U M	6.3V
C587	403 467 0911	CERAMIC	0.1U K	25V
C588	403 467 0911	CERAMIC	0.1U K	25V
C596	403 467 0911	CERAMIC	0.1U K	25V
C597	303 437 4614	CERAMIC	10U K	25V
C598	403 467 0911	CERAMIC	0.1U K	25V
C599	303 437 4614	CERAMIC	10U K	25V
C6801	303 409 3426	CERAMIC	0.1U K	16V
	303 453 8610	CERAMIC	0.1U K	16V
	303 453 8917	CERAMIC	0.1U K	16V

Electrical Parts List

Key No.	Part No.	Description		
C6802	303 409 3426	CERAMIC	0.1U K	16V
	303 453 8610	CERAMIC	0.1U K	16V
	303 453 8917	CERAMIC	0.1U K	16V
C6803	303 409 3426	CERAMIC	0.1U K	16V
	303 453 8610	CERAMIC	0.1U K	16V
	303 453 8917	CERAMIC	0.1U K	16V
C6844	303 372 7510	CERAMIC	2.2U K	6.3V
C6845	303 372 7510	CERAMIC	2.2U K	6.3V
C6847	303 372 7510	CERAMIC	2.2U K	6.3V
C6848	303 372 7510	CERAMIC	2.2U K	6.3V
C7083	303 394 1312	ELECT	100U M	6.3V
C7812	303 437 4614	CERAMIC	10U K	25V
C7813	303 437 4614	CERAMIC	10U K	25V
C7814	303 397 8219	CERAMIC	2.2U K	25V
C7815	303 275 3015	CERAMIC	0.047U K	16V
C7816	303 305 8812	CERAMIC	47P J	50V
	303 454 1610	CERAMIC	47P J	50V
	303 453 7217	CERAMIC	47P J	50V
C7817	303 441 9810	CERAMIC	0.01U K	50V
C7821	303 376 6311	CERAMIC	0.47U K	10V
C7822	303 376 6311	CERAMIC	0.47U K	10V
C7825	303 397 8219	CERAMIC	2.2U K	25V
C7827	303 381 5613	ELECT	220U M	16V
C7831	303 275 3015	CERAMIC	0.047U K	16V
C7832	303 305 8812	CERAMIC	47P J	50V
	303 454 1610	CERAMIC	47P J	50V
	303 453 7217	CERAMIC	47P J	50V
C7833	303 381 5613	ELECT	220U M	16V
C7837	303 441 9810	CERAMIC	0.01U K	50V
C7839	303 394 5815	CERAMIC	4.7U K	16V
C7841	303 437 4614	CERAMIC	10U K	25V
C7842	403 467 0911	CERAMIC	0.1U K	25V
C7843	303 376 3112	ELECT	100U M	25V
C7844	403 467 0911	CERAMIC	0.1U K	25V
C8001	303 370 0018	CERAMIC	10U K	6.3V
	303 368 7319	CERAMIC	10U K	6.3V
	303 358 3215	CERAMIC	10U K	6.3V
C8002	303 409 3426	CERAMIC	0.1U K	16V
	303 453 8610	CERAMIC	0.1U K	16V
	303 453 8917	CERAMIC	0.1U K	16V
C8003	303 409 3426	CERAMIC	0.1U K	16V
	303 453 8610	CERAMIC	0.1U K	16V
	303 453 8917	CERAMIC	0.1U K	16V
C8004	303 409 3426	CERAMIC	0.1U K	16V
	303 453 8610	CERAMIC	0.1U K	16V
	303 453 8917	CERAMIC	0.1U K	16V
C8006	303 409 3426	CERAMIC	0.1U K	16V
	303 453 8610	CERAMIC	0.1U K	16V
	303 453 8917	CERAMIC	0.1U K	16V
C8007	303 409 3426	CERAMIC	0.1U K	16V
	303 453 8610	CERAMIC	0.1U K	16V
	303 453 8917	CERAMIC	0.1U K	16V
C8008	303 370 0018	CERAMIC	10U K	6.3V
	303 368 7319	CERAMIC	10U K	6.3V
	303 358 3215	CERAMIC	10U K	6.3V
C8009	303 370 0018	CERAMIC	10U K	6.3V
	303 368 7319	CERAMIC	10U K	6.3V
	303 358 3215	CERAMIC	10U K	6.3V
C801	303 409 3426	CERAMIC	0.1U K	16V
	303 453 8610	CERAMIC	0.1U K	16V
	303 453 8917	CERAMIC	0.1U K	16V
C8011	303 409 3426	CERAMIC	0.1U K	16V
	303 453 8610	CERAMIC	0.1U K	16V
	303 453 8917	CERAMIC	0.1U K	16V
C8012	303 370 0018	CERAMIC	10U K	6.3V
	303 368 7319	CERAMIC	10U K	6.3V
	303 358 3215	CERAMIC	10U K	6.3V
C8013	303 409 3426	CERAMIC	0.1U K	16V
	303 453 8610	CERAMIC	0.1U K	16V
	303 453 8917	CERAMIC	0.1U K	16V
C8014	403 460 5517	CERAMIC	8P D	50V
	403 460 5418	CERAMIC	8P D	50V
C8016	403 460 5517	CERAMIC	8P D	50V
	403 460 5418	CERAMIC	8P D	50V
C8017	303 409 3426	CERAMIC	0.1U K	16V
	303 453 8610	CERAMIC	0.1U K	16V
	303 453 8917	CERAMIC	0.1U K	16V
C8018	303 409 3426	CERAMIC	0.1U K	16V
	303 453 8610	CERAMIC	0.1U K	16V
	303 453 8917	CERAMIC	0.1U K	16V
C8019	303 409 3426	CERAMIC	0.1U K	16V
	303 453 8610	CERAMIC	0.1U K	16V
	303 453 8917	CERAMIC	0.1U K	16V
C8021	303 409 3426	CERAMIC	0.1U K	16V
	303 453 8610	CERAMIC	0.1U K	16V
	303 453 8917	CERAMIC	0.1U K	16V
C8022	303 409 3426	CERAMIC	0.1U K	16V
	303 453 8610	CERAMIC	0.1U K	16V
	303 453 8917	CERAMIC	0.1U K	16V
C8023	303 409 3426	CERAMIC	0.1U K	16V
	303 453 8610	CERAMIC	0.1U K	16V
	303 453 8917	CERAMIC	0.1U K	16V
C8024	303 370 0018	CERAMIC	10U K	6.3V
	303 368 7319	CERAMIC	10U K	6.3V
	303 358 3215	CERAMIC	10U K	6.3V
C8026	303 370 0018	CERAMIC	10U K	6.3V
	303 368 7319	CERAMIC	10U K	6.3V
	303 358 3215	CERAMIC	10U K	6.3V
C8027	303 370 0018	CERAMIC	10U K	6.3V
	303 368 7319	CERAMIC	10U K	6.3V
	303 358 3215	CERAMIC	10U K	6.3V
C8028	303 409 3426	CERAMIC	0.1U K	16V
	303 453 8610	CERAMIC	0.1U K	16V
	303 453 8917	CERAMIC	0.1U K	16V
C8029	303 409 3426	CERAMIC	0.1U K	16V
	303 453 8610	CERAMIC	0.1U K	16V
	303 453 8917	CERAMIC	0.1U K	16V
C8031	303 409 3426	CERAMIC	0.1U K	16V
	303 453 8610	CERAMIC	0.1U K	16V
	303 453 8917	CERAMIC	0.1U K	16V
C8032	303 409 3426	CERAMIC	0.1U K	16V
	303 453 8610	CERAMIC	0.1U K	16V
	303 453 8917	CERAMIC	0.1U K	16V
C8033	303 409 3426	CERAMIC	0.1U K	16V
	303 453 8610	CERAMIC	0.1U K	16V
	303 453 8917	CERAMIC	0.1U K	16V
C8034	303 409 3426	CERAMIC	0.1U K	16V
	303 453 8610	CERAMIC	0.1U K	16V
	303 453 8917	CERAMIC	0.1U K	16V
C8036	303 409 3426	CERAMIC	0.1U K	16V
	303 453 8610	CERAMIC	0.1U K	16V
	303 453 8917	CERAMIC	0.1U K	16V
C8037	303 409 3426	CERAMIC	0.1U K	16V
	303 453 8610	CERAMIC	0.1U K	16V
	303 453 8917	CERAMIC	0.1U K	16V
C8038	303 370 0018	CERAMIC	10U K	6.3V
	303 368 7319	CERAMIC	10U K	6.3V
	303 358 3215	CERAMIC	10U K	6.3V
C8081	303 370 0018	CERAMIC	10U K	6.3V
	303 368 7319	CERAMIC	10U K	6.3V
	303 358 3215	CERAMIC	10U K	6.3V
C8093	303 379 0217	POS-SOLID	68U M	6.3V
C8096	303 370 0018	CERAMIC	10U K	6.3V
	303 368 7319	CERAMIC	10U K	6.3V

Electrical Parts List

Key No.	Part No.	Description		
	303 358 3215	CERAMIC	10U K	6.3V
C8097	303 383 5215	CERAMIC	4.7U K	6.3V
C8098	303 409 3426	CERAMIC	0.1U K	16V
	303 453 8610	CERAMIC	0.1U K	16V
	303 453 8917	CERAMIC	0.1U K	16V
C8104	303 376 6311	CERAMIC	0.47U K	10V
C8201	303 409 3426	CERAMIC	0.1U K	16V
	303 453 8610	CERAMIC	0.1U K	16V
	303 453 8917	CERAMIC	0.1U K	16V
C8202	303 442 0519	CERAMIC	0.068U K	16V
C8203	303 442 0519	CERAMIC	0.068U K	16V
C8204	303 442 0519	CERAMIC	0.068U K	16V
C8206	303 409 3426	CERAMIC	0.1U K	16V
	303 453 8610	CERAMIC	0.1U K	16V
	303 453 8917	CERAMIC	0.1U K	16V
C8207	303 409 3426	CERAMIC	0.1U K	16V
	303 453 8610	CERAMIC	0.1U K	16V
	303 453 8917	CERAMIC	0.1U K	16V
C8208	303 409 3426	CERAMIC	0.1U K	16V
	303 453 8610	CERAMIC	0.1U K	16V
	303 453 8917	CERAMIC	0.1U K	16V
C8209	303 409 3426	CERAMIC	0.1U K	16V
	303 453 8610	CERAMIC	0.1U K	16V
	303 453 8917	CERAMIC	0.1U K	16V
C8211	303 442 0519	CERAMIC	0.068U K	16V
C8212	303 442 0519	CERAMIC	0.068U K	16V
C8213	303 409 3426	CERAMIC	0.1U K	16V
	303 453 8610	CERAMIC	0.1U K	16V
	303 453 8917	CERAMIC	0.1U K	16V
C8214	303 442 0519	CERAMIC	0.068U K	16V
C8215	303 409 3426	CERAMIC	0.1U K	16V
	303 453 8610	CERAMIC	0.1U K	16V
	303 453 8917	CERAMIC	0.1U K	16V
C8216	303 409 3426	CERAMIC	0.1U K	16V
	303 453 8610	CERAMIC	0.1U K	16V
	303 453 8917	CERAMIC	0.1U K	16V
C8217	303 409 3426	CERAMIC	0.1U K	16V
	303 453 8610	CERAMIC	0.1U K	16V
	303 453 8917	CERAMIC	0.1U K	16V
C8218	303 409 3426	CERAMIC	0.1U K	16V
	303 453 8610	CERAMIC	0.1U K	16V
	303 453 8917	CERAMIC	0.1U K	16V
C8219	303 442 0519	CERAMIC	0.068U K	16V
C8221	303 442 0519	CERAMIC	0.068U K	16V
C8222	303 409 3426	CERAMIC	0.1U K	16V
	303 453 8610	CERAMIC	0.1U K	16V
	303 453 8917	CERAMIC	0.1U K	16V
C8223	303 409 3426	CERAMIC	0.1U K	16V
	303 453 8610	CERAMIC	0.1U K	16V
	303 453 8917	CERAMIC	0.1U K	16V
C8224	303 442 0519	CERAMIC	0.068U K	16V
C8226	303 442 0519	CERAMIC	0.068U K	16V
C8227	303 442 0519	CERAMIC	0.068U K	16V
C8228	303 409 3426	CERAMIC	0.1U K	16V
	303 453 8610	CERAMIC	0.1U K	16V
	303 453 8917	CERAMIC	0.1U K	16V
C8229	303 409 3426	CERAMIC	0.1U K	16V
	303 453 8610	CERAMIC	0.1U K	16V
	303 453 8917	CERAMIC	0.1U K	16V
C8230	303 409 3426	CERAMIC	0.1U K	16V
	303 453 8610	CERAMIC	0.1U K	16V
	303 453 8917	CERAMIC	0.1U K	16V
C8231	303 442 0519	CERAMIC	0.068U K	16V
C8232	303 409 3426	CERAMIC	0.1U K	16V
	303 453 8610	CERAMIC	0.1U K	16V
	303 453 8917	CERAMIC	0.1U K	16V
C8233	303 276 3113	CERAMIC	33P J	50V
C8235	303 276 3113	CERAMIC	33P J	50V
C8236	303 409 3426	CERAMIC	0.1U K	16V
	303 453 8610	CERAMIC	0.1U K	16V
	303 453 8917	CERAMIC	0.1U K	16V
C8237	403 455 1012	CERAMIC	1U K	10V
	303 433 1112	CERAMIC	1U K	10V
C8238	303 409 3426	CERAMIC	0.1U K	16V
	303 453 8610	CERAMIC	0.1U K	16V
	303 453 8917	CERAMIC	0.1U K	16V
C8239	303 409 3426	CERAMIC	0.1U K	16V
	303 453 8610	CERAMIC	0.1U K	16V
	303 453 8917	CERAMIC	0.1U K	16V
C8301	303 370 0018	CERAMIC	10U K	6.3V
	303 368 7319	CERAMIC	10U K	6.3V
	303 358 3215	CERAMIC	10U K	6.3V
C8302	303 370 0018	CERAMIC	10U K	6.3V
	303 368 7319	CERAMIC	10U K	6.3V
	303 358 3215	CERAMIC	10U K	6.3V
C8303	303 409 3426	CERAMIC	0.1U K	16V
	303 453 8610	CERAMIC	0.1U K	16V
	303 453 8917	CERAMIC	0.1U K	16V
C8801	303 409 3426	CERAMIC	0.1U K	16V
	303 453 8610	CERAMIC	0.1U K	16V
	303 453 8917	CERAMIC	0.1U K	16V
C8802	403 455 1012	CERAMIC	1U K	10V
	303 433 1112	CERAMIC	1U K	10V
C8806	303 409 3426	CERAMIC	0.1U K	16V
	303 453 8610	CERAMIC	0.1U K	16V
	303 453 8917	CERAMIC	0.1U K	16V
C8807	303 276 3113	CERAMIC	33P J	50V
	303 453 7019	CERAMIC	33P J	50V
	303 453 9617	CERAMIC	33P J	50V
C8808	303 276 3113	CERAMIC	33P J	50V
	303 453 7019	CERAMIC	33P J	50V
	303 453 9617	CERAMIC	33P J	50V
C8809	303 409 3426	CERAMIC	0.1U K	16V
	303 453 8610	CERAMIC	0.1U K	16V
	303 453 8917	CERAMIC	0.1U K	16V
C8810	303 409 3426	CERAMIC	0.1U K	16V
	303 453 8610	CERAMIC	0.1U K	16V
	303 453 8917	CERAMIC	0.1U K	16V
C8811	303 409 3426	CERAMIC	0.1U K	16V
	303 453 8610	CERAMIC	0.1U K	16V
	303 453 8917	CERAMIC	0.1U K	16V
C8812	303 409 3426	CERAMIC	0.1U K	16V
	303 453 8610	CERAMIC	0.1U K	16V
	303 453 8917	CERAMIC	0.1U K	16V
C8813	303 409 3426	CERAMIC	0.1U K	16V
	303 453 8610	CERAMIC	0.1U K	16V
	303 453 8917	CERAMIC	0.1U K	16V
C8814	303 409 3426	CERAMIC	0.1U K	16V
	303 453 8610	CERAMIC	0.1U K	16V
	303 453 8917	CERAMIC	0.1U K	16V
C8815	303 409 3426	CERAMIC	0.1U K	16V
	303 453 8610	CERAMIC	0.1U K	16V
	303 453 8917	CERAMIC	0.1U K	16V
C8817	303 409 3426	CERAMIC	0.1U K	16V
	303 453 8610	CERAMIC	0.1U K	16V
	303 453 8917	CERAMIC	0.1U K	16V
C8818	303 409 3426	CERAMIC	0.1U K	16V
	303 453 8610	CERAMIC	0.1U K	16V
	303 453 8917	CERAMIC	0.1U K	16V
C8819	303 409 3426	CERAMIC	0.1U K	16V
	303 453 8610	CERAMIC	0.1U K	16V
	303 453 8917	CERAMIC	0.1U K	16V
C8820	303 409 3426	CERAMIC	0.1U K	16V
	303 453 8610	CERAMIC	0.1U K	16V

Electrical Parts List

Key No.	Part No.	Description		
	303 453 8917	CERAMIC	0.1U K	16V
C8821	303 409 3426	CERAMIC	0.1U K	16V
	303 453 8610	CERAMIC	0.1U K	16V
	303 453 8917	CERAMIC	0.1U K	16V
C8823	303 409 3426	CERAMIC	0.1U K	16V
	303 453 8610	CERAMIC	0.1U K	16V
	303 453 8917	CERAMIC	0.1U K	16V
C9007	303 409 3426	CERAMIC	0.1U K	16V
	303 453 8610	CERAMIC	0.1U K	16V
	303 453 8917	CERAMIC	0.1U K	16V
C9011	303 392 1215	ELECT	47U M	6.3V
C9012	303 409 3426	CERAMIC	0.1U K	16V
	303 453 8610	CERAMIC	0.1U K	16V
	303 453 8917	CERAMIC	0.1U K	16V
C9013	303 409 3426	CERAMIC	0.1U K	16V
	303 453 8610	CERAMIC	0.1U K	16V
	303 453 8917	CERAMIC	0.1U K	16V
C9014	303 409 3426	CERAMIC	0.1U K	16V
	303 453 8610	CERAMIC	0.1U K	16V
	303 453 8917	CERAMIC	0.1U K	16V
C9015	303 409 3426	CERAMIC	0.1U K	16V
	303 453 8610	CERAMIC	0.1U K	16V
	303 453 8917	CERAMIC	0.1U K	16V
C9016	303 409 3426	CERAMIC	0.1U K	16V
	303 453 8610	CERAMIC	0.1U K	16V
	303 453 8917	CERAMIC	0.1U K	16V
C9017	303 392 1215	ELECT	47U M	6.3V
C9019	303 409 3426	CERAMIC	0.1U K	16V
	303 453 8610	CERAMIC	0.1U K	16V
	303 453 8917	CERAMIC	0.1U K	16V
C9021	303 305 8515	CERAMIC	15P J	50V
	403 455 5218	CERAMIC	15P J	50V
	403 455 5713	CERAMIC	15P J	50V
C9022	303 305 8515	CERAMIC	15P J	50V
	403 455 5218	CERAMIC	15P J	50V
	403 455 5713	CERAMIC	15P J	50V
C9631	403 455 1012	CERAMIC	1U K	10V
	303 433 1112	CERAMIC	1U K	10V
C9878	303 324 6417	CERAMIC	0.022U K	16V
C9880	303 305 8812	CERAMIC	47P J	50V
C9882	303 409 3426	CERAMIC	0.1U K	16V
	303 453 8610	CERAMIC	0.1U K	16V
	303 453 8917	CERAMIC	0.1U K	16V
C9883	303 392 1215	ELECT	47U M	6.3V
C9884	303 409 3426	CERAMIC	0.1U K	16V
	303 453 8610	CERAMIC	0.1U K	16V
	303 453 8917	CERAMIC	0.1U K	16V
C9886	303 409 3426	CERAMIC	0.1U K	16V
	303 453 8610	CERAMIC	0.1U K	16V
	303 453 8917	CERAMIC	0.1U K	16V
C9887	303 409 3426	CERAMIC	0.1U K	16V
	303 453 8610	CERAMIC	0.1U K	16V
	303 453 8917	CERAMIC	0.1U K	16V
C9889	303 409 3426	CERAMIC	0.1U K	16V
	303 453 8610	CERAMIC	0.1U K	16V
	303 453 8917	CERAMIC	0.1U K	16V
RESISTOR				
R008	301 276 4710	MT-GLAZE	0.000 ZA	1/3W
R009	301 301 3817	MT-GLAZE	820 FA	1/16W
R011	301 226 1516	MT-GLAZE	0.000 ZA	1/16W
R012	301 276 4710	MT-GLAZE	0.000 ZA	1/3W
R013	301 226 1516	MT-GLAZE	0.000 ZA	1/16W
R015	301 265 2611	MT-GLAZE	5.1K FA	1/10W
R016	301 265 1713	MT-GLAZE	4.7K FA	1/10W
R021	301 150 6014	MT-GLAZE	0.000 ZA	1/10W
R1001	301 260 4115	MT-GLAZE	75 JA	1/3W

Key No.	Part No.	Description		
R1002	301 224 8814	MT-GLAZE	100 JA	1/16W
R1003	301 225 8110	MT-GLAZE	10 JA	1/16W
R1004	301 226 1516	MT-GLAZE	0.000 ZA	1/16W
R1011	301 260 4115	MT-GLAZE	75 JA	1/3W
R1012	301 224 8814	MT-GLAZE	100 JA	1/16W
R1021	301 260 4115	MT-GLAZE	75 JA	1/3W
R1022	301 224 8814	MT-GLAZE	100 JA	1/16W
R1025	301 260 4214	MT-GLAZE	82 JA	1/3W
R1026	301 260 4214	MT-GLAZE	82 JA	1/3W
R1028	301 260 4214	MT-GLAZE	82 JA	1/3W
R1029	301 225 2019	MT-GLAZE	680 JA	1/16W
R1030	301 225 1418	MT-GLAZE	47K JA	1/16W
R1035	301 225 8110	MT-GLAZE	10 JA	1/16W
R1036	301 225 8110	MT-GLAZE	10 JA	1/16W
R1037	301 225 8110	MT-GLAZE	10 JA	1/16W
R1038	301 224 8814	MT-GLAZE	100 JA	1/16W
R1039	301 225 8110	MT-GLAZE	10 JA	1/16W
R1040	301 224 9316	MT-GLAZE	1K JA	1/16W
R1041	301 225 1418	MT-GLAZE	47K JA	1/16W
R1043	301 224 9019	MT-GLAZE	10K JA	1/16W
R1044	301 224 9019	MT-GLAZE	10K JA	1/16W
R1048	301 224 8814	MT-GLAZE	100 JA	1/16W
R1050	301 224 9316	MT-GLAZE	1K JA	1/16W
R1052	301 263 7420	MT-GLAZE	75 JA	1/16W
R1056	301 225 1210	MT-GLAZE	4.7K JA	1/16W
R1057	301 225 1210	MT-GLAZE	4.7K JA	1/16W
R1060	301 224 9316	MT-GLAZE	1K JA	1/16W
R1062	301 263 7420	MT-GLAZE	75 JA	1/16W
R1063	301 225 2019	MT-GLAZE	680 JA	1/16W
R1064	301 225 2019	MT-GLAZE	680 JA	1/16W
R1065	301 224 9316	MT-GLAZE	1K JA	1/16W
R1066	301 240 5613	MT-GLAZE	3K JA	1/16W
R1069	301 240 5613	MT-GLAZE	3K JA	1/16W
R1072	301 263 7420	MT-GLAZE	75 JA	1/16W
R1081	301 225 1418	MT-GLAZE	47K JA	1/16W
R1083	301 225 8110	MT-GLAZE	10 JA	1/16W
R1084	301 224 9316	MT-GLAZE	1K JA	1/16W
R1085	301 225 1814	MT-GLAZE	47 JA	1/16W
R1088	301 224 9316	MT-GLAZE	1K JA	1/16W
R1091	301 225 1418	MT-GLAZE	47K JA	1/16W
R1105	301 226 1516	MT-GLAZE	0.000 ZA	1/16W
R1130	301 150 6014	MT-GLAZE	0.000 ZA	1/10W
R1134	301 225 8110	MT-GLAZE	10 JA	1/16W
R1141	301 150 6014	MT-GLAZE	0.000 ZA	1/10W
R1181	301 150 6014	MT-GLAZE	0.000 ZA	1/10W
R1191	301 150 6014	MT-GLAZE	0.000 ZA	1/10W
R1301	301 338 8113	MT-GLAZE	1.2K FA	1/16W
R1302	301 338 8113	MT-GLAZE	1.2K FA	1/16W
R1331	301 224 9415	MT-GLAZE	1M JA	1/16W
R1332	301 226 1516	MT-GLAZE	0.000 ZA	1/16W
R1341	301 224 9316	MT-GLAZE	1K JA	1/16W
R1358	301 339 9614	MT-GLAZE	23.2K FA	1/10W
R2006	301 037 5116	MT-GLAZE	10 JA	1/10W
R2007	301 037 5116	MT-GLAZE	10 JA	1/10W
R2011	301 224 8814	MT-GLAZE	100 JA	1/16W
R2016	301 225 3818	MT-GLAZE	1.5K JA	1/16W
R2021	301 224 8814	MT-GLAZE	100 JA	1/16W
R2029	301 225 3818	MT-GLAZE	1.5K JA	1/16W
R2034	301 224 8814	MT-GLAZE	100 JA	1/16W
R2036	301 225 3818	MT-GLAZE	1.5K JA	1/16W
R2043	301 225 8110	MT-GLAZE	10 JA	1/16W
R2053	301 225 8110	MT-GLAZE	10 JA	1/16W
R2201	301 037 5017	MT-GLAZE	0.000 ZA	1/10W
R2202	301 225 8110	MT-GLAZE	10 JA	1/16W
R2204	301 225 8110	MT-GLAZE	10 JA	1/16W
R2206	301 037 5017	MT-GLAZE	0.000 ZA	1/10W
R2208	301 225 0213	MT-GLAZE	3.3K JA	1/16W

Electrical Parts List

Key No.	Part No.	Description		
R2211	301 225 1210	MT-GLAZE	4.7K JA	1/16W
R2212	301 263 7420	MT-GLAZE	75 JA	1/16W
R2215	301 225 1814	MT-GLAZE	47 JA	1/16W
R2216	301 225 1814	MT-GLAZE	47 JA	1/16W
R2217	301 263 7420	MT-GLAZE	75 JA	1/16W
R2218	301 225 1814	MT-GLAZE	47 JA	1/16W
R2219	301 225 8110	MT-GLAZE	10 JA	1/16W
R2220	301 225 8110	MT-GLAZE	10 JA	1/16W
R2221	301 225 1814	MT-GLAZE	47 JA	1/16W
R2222	301 225 1814	MT-GLAZE	47 JA	1/16W
R2223	301 225 1814	MT-GLAZE	47 JA	1/16W
R2234	301 225 0312	MT-GLAZE	33 JA	1/16W
R2238	301 225 0312	MT-GLAZE	33 JA	1/16W
R2241	301 225 0312	MT-GLAZE	33 JA	1/16W
R2892	301 224 8814	MT-GLAZE	100 JA	1/16W
R3001	301 224 8913	MT-GLAZE	100K JA	1/16W
R3002	301 224 8814	MT-GLAZE	100 JA	1/16W
R301	301 225 8110	MT-GLAZE	10 JA	1/16W
R3011	301 224 8913	MT-GLAZE	100K JA	1/16W
R3012	301 224 8814	MT-GLAZE	100 JA	1/16W
R302	301 338 1015	MT-GLAZE	49.9 DA	1/16W
R3021	301 224 8913	MT-GLAZE	100K JA	1/16W
R303	301 338 1015	MT-GLAZE	49.9 DA	1/16W
R3031	301 224 8913	MT-GLAZE	100K JA	1/16W
R3036	301 224 8814	MT-GLAZE	100 JA	1/16W
R305	301 224 9019	MT-GLAZE	10K JA	1/16W
R3051	301 224 8913	MT-GLAZE	100K JA	1/16W
R3053	301 224 8913	MT-GLAZE	100K JA	1/16W
R3054	301 224 8913	MT-GLAZE	100K JA	1/16W
R3056	301 224 9415	MT-GLAZE	1M JA	1/16W
R3057	301 287 2227	MT-GLAZE	22K FA	1/16W
R3061	301 224 8814	MT-GLAZE	100 JA	1/16W
R3063	301 224 8913	MT-GLAZE	100K JA	1/16W
R3064	301 224 8814	MT-GLAZE	100 JA	1/16W
R308	301 225 8011	MT-GLAZE	330 JA	1/16W
R309	301 263 7420	MT-GLAZE	75 JA	1/16W
R310	301 263 7420	MT-GLAZE	75 JA	1/16W
R312	301 225 1814	MT-GLAZE	47 JA	1/16W
R313	301 225 1814	MT-GLAZE	47 JA	1/16W
R314	301 225 1814	MT-GLAZE	47 JA	1/16W
R315	301 225 8110	MT-GLAZE	10 JA	1/16W
R316	301 225 1814	MT-GLAZE	47 JA	1/16W
R317	301 225 1814	MT-GLAZE	47 JA	1/16W
R318	301 225 1814	MT-GLAZE	47 JA	1/16W
R319	301 225 1814	MT-GLAZE	47 JA	1/16W
R321	301 225 1814	MT-GLAZE	47 JA	1/16W
R322	301 225 1814	MT-GLAZE	47 JA	1/16W
R323	301 225 1814	MT-GLAZE	47 JA	1/16W
R324	301 298 5511	MT-GLAZE	8.2K FA	1/16W
R326	301 224 9019	MT-GLAZE	10K JA	1/16W
R327	301 224 9019	MT-GLAZE	10K JA	1/16W
R328	301 224 9019	MT-GLAZE	10K JA	1/16W
R331	301 224 9019	MT-GLAZE	10K JA	1/16W
R332	301 263 7420	MT-GLAZE	75 JA	1/16W
R333	301 224 9019	MT-GLAZE	10K JA	1/16W
R336	301 224 9019	MT-GLAZE	10K JA	1/16W
R337	301 224 9019	MT-GLAZE	10K JA	1/16W
R338	301 224 9019	MT-GLAZE	10K JA	1/16W
R339	301 224 9019	MT-GLAZE	10K JA	1/16W
R341	301 224 9019	MT-GLAZE	10K JA	1/16W
R342	301 225 0213	MT-GLAZE	3.3K JA	1/16W
R343	301 224 9019	MT-GLAZE	10K JA	1/16W
R344	301 225 1814	MT-GLAZE	47 JA	1/16W
R347	301 225 1814	MT-GLAZE	47 JA	1/16W
R349	301 263 7420	MT-GLAZE	75 JA	1/16W
R3502	301 225 1418	MT-GLAZE	47K JA	1/16W
R3504	301 226 1516	MT-GLAZE	0.000 ZA	1/16W
R3505	301 226 1516	MT-GLAZE	0.000 ZA	1/16W
R3506	301 226 1516	MT-GLAZE	0.000 ZA	1/16W
R3511	301 226 1516	MT-GLAZE	0.000 ZA	1/16W
R352	301 224 9019	MT-GLAZE	10K JA	1/16W
R353	301 225 1814	MT-GLAZE	47 JA	1/16W
R3532	301 225 1418	MT-GLAZE	47K JA	1/16W
R355	301 225 0213	MT-GLAZE	3.3K JA	1/16W
R356	301 224 9019	MT-GLAZE	10K JA	1/16W
R3562	301 225 1418	MT-GLAZE	47K JA	1/16W
R358	301 225 0213	MT-GLAZE	3.3K JA	1/16W
R3580	301 037 5017	MT-GLAZE	0.000 ZA	1/10W
R3583	301 224 9019	MT-GLAZE	10K JA	1/16W
R3587	301 224 9316	MT-GLAZE	1K JA	1/16W
R3588	301 224 9019	MT-GLAZE	10K JA	1/16W
R359	301 225 0213	MT-GLAZE	3.3K JA	1/16W
R3602	301 225 2118	MT-GLAZE	12K JA	1/16W
R3606	301 225 8110	MT-GLAZE	10 JA	1/16W
R3620	301 190 1710	MT-GLAZE	0.000 ZA	1W
R3621	301 224 9019	MT-GLAZE	10K JA	1/16W
R3622	301 224 9019	MT-GLAZE	10K JA	1/16W
R3623	301 224 9019	MT-GLAZE	10K JA	1/16W
R3626	301 225 1210	MT-GLAZE	4.7K JA	1/16W
R3627	301 225 1210	MT-GLAZE	4.7K JA	1/16W
R3628	301 224 9019	MT-GLAZE	10K JA	1/16W
R363	301 225 0213	MT-GLAZE	3.3K JA	1/16W
R3636	301 225 2118	MT-GLAZE	12K JA	1/16W
R3637	301 224 9019	MT-GLAZE	10K JA	1/16W
R3638	301 224 9019	MT-GLAZE	10K JA	1/16W
R364	301 225 0213	MT-GLAZE	3.3K JA	1/16W
R368	301 225 8110	MT-GLAZE	10 JA	1/16W
R369	301 225 8110	MT-GLAZE	10 JA	1/16W
R371	301 225 1814	MT-GLAZE	47 JA	1/16W
R3801	301 225 8110	MT-GLAZE	10 JA	1/16W
R3803	301 225 8110	MT-GLAZE	10 JA	1/16W
R3804	301 225 8110	MT-GLAZE	10 JA	1/16W
R3805	301 226 1516	MT-GLAZE	0.000 ZA	1/16W
R3809	301 224 9316	MT-GLAZE	1K JA	1/16W
R3812	301 225 8110	MT-GLAZE	10 JA	1/16W
R3816	301 226 1516	MT-GLAZE	0.000 ZA	1/16W
R3856	301 224 9019	MT-GLAZE	10K JA	1/16W
R3857	301 224 9019	MT-GLAZE	10K JA	1/16W
R388	301 224 9019	MT-GLAZE	10K JA	1/16W
R389	301 224 9019	MT-GLAZE	10K JA	1/16W
R399	301 225 1210	MT-GLAZE	4.7K JA	1/16W
R4001	301 224 8814	MT-GLAZE	100 JA	1/16W
R4014	301 225 1210	MT-GLAZE	4.7K JA	1/16W
R4016	301 224 9514	MT-GLAZE	2.2K JA	1/16W
R4017	301 224 9514	MT-GLAZE	2.2K JA	1/16W
R4023	301 224 9019	MT-GLAZE	10K JA	1/16W
R4024	301 225 1210	MT-GLAZE	4.7K JA	1/16W
R404	301 224 9019	MT-GLAZE	10K JA	1/16W
R4072	301 224 8814	MT-GLAZE	100 JA	1/16W
R4077	301 224 8814	MT-GLAZE	100 JA	1/16W
R409	301 224 8814	MT-GLAZE	100 JA	1/16W
R411	301 224 8814	MT-GLAZE	100 JA	1/16W
R412	301 225 1814	MT-GLAZE	47 JA	1/16W
R414	301 225 1814	MT-GLAZE	47 JA	1/16W
R415	301 224 8814	MT-GLAZE	100 JA	1/16W
R416	301 225 1814	MT-GLAZE	47 JA	1/16W
R418	301 225 1814	MT-GLAZE	47 JA	1/16W
R419	301 225 1814	MT-GLAZE	47 JA	1/16W
R422	301 225 1814	MT-GLAZE	47 JA	1/16W
R423	301 225 1814	MT-GLAZE	47 JA	1/16W
R424	301 225 1210	MT-GLAZE	4.7K JA	1/16W
R472	301 226 1516	MT-GLAZE	0.000 ZA	1/16W
R4830	301 225 3818	MT-GLAZE	1.5K JA	1/16W
R4841	301 226 1516	MT-GLAZE	0.000 ZA	1/16W

Electrical Parts List

Key No.	Part No.	Description		
R4842	301 226 1516	MT-GLAZE	0.000 ZA	1/16W
R4862	301 225 1616	MT-GLAZE	390 JA	1/16W
R4863	301 225 1616	MT-GLAZE	390 JA	1/16W
R4864	301 226 1516	MT-GLAZE	0.000 ZA	1/16W
R4868	301 224 8814	MT-GLAZE	100 JA	1/16W
R5001	301 287 2227	MT-GLAZE	22K FA	1/16W
R5002	301 287 2227	MT-GLAZE	22K FA	1/16W
R5003	301 287 2227	MT-GLAZE	22K FA	1/16W
R5004	301 287 2227	MT-GLAZE	22K FA	1/16W
R5005	301 299 4810	MT-GLAZE	2.7K FA	1/16W
R5006	301 294 2811	MT-GLAZE	2.2K FA	1/16W
R5007	301 225 2019	MT-GLAZE	680 JA	1/16W
R501	301 224 8814	MT-GLAZE	100 JA	1/16W
R5010	301 299 4810	MT-GLAZE	2.7K FA	1/16W
R5011	301 294 2811	MT-GLAZE	2.2K FA	1/16W
R5012	301 225 2019	MT-GLAZE	680 JA	1/16W
R5013	301 224 9910	MT-GLAZE	22K JA	1/16W
R5014	301 224 9910	MT-GLAZE	22K JA	1/16W
R5017	301 224 9316	MT-GLAZE	1K JA	1/16W
R5018	301 224 9316	MT-GLAZE	1K JA	1/16W
R5019	301 225 8110	MT-GLAZE	10 JA	1/16W
R5020	301 162 2219	MT-GLAZE	10 JA	1/10W
R5021	301 150 5819	MT-GLAZE	100K JA	1/10W
R5022	301 225 8011	MT-GLAZE	330 JA	1/16W
R5023	301 150 5819	MT-GLAZE	100K JA	1/10W
R5024	301 294 4112	MT-GLAZE	30K FA	1/16W
R5025	301 226 1516	MT-GLAZE	0.000 ZA	1/16W
R5026	301 294 3313	MT-GLAZE	15K FA	1/16W
R5027	301 294 3313	MT-GLAZE	15K FA	1/16W
R5028	301 226 1516	MT-GLAZE	0.000 ZA	1/16W
R5029	301 294 4112	MT-GLAZE	30K FA	1/16W
R5030	301 226 1516	MT-GLAZE	0.000 ZA	1/16W
R5033	301 225 0213	MT-GLAZE	3.3K JA	1/16W
R5034	301 224 9316	MT-GLAZE	1K JA	1/16W
R5035	301 226 1516	MT-GLAZE	0.000 ZA	1/16W
R5036	301 225 0213	MT-GLAZE	3.3K JA	1/16W
R5037	301 224 9316	MT-GLAZE	1K JA	1/16W
R5039	301 224 8814	MT-GLAZE	100 JA	1/16W
R5040	301 224 8814	MT-GLAZE	100 JA	1/16W
R5041	301 225 1210	MT-GLAZE	4.7K JA	1/16W
R5042	301 224 9019	MT-GLAZE	10K JA	1/16W
R5043	301 225 1210	MT-GLAZE	4.7K JA	1/16W
R5044	301 224 9019	MT-GLAZE	10K JA	1/16W
R5046	301 224 9019	MT-GLAZE	10K JA	1/16W
R5047	301 299 4810	MT-GLAZE	2.7K FA	1/16W
R5048	301 224 9316	MT-GLAZE	1K JA	1/16W
R5049	301 225 1210	MT-GLAZE	4.7K JA	1/16W
R5050	301 225 0114	MT-GLAZE	27K JA	1/16W
R5055	301 225 1210	MT-GLAZE	4.7K JA	1/16W
R5056	301 225 1210	MT-GLAZE	4.7K JA	1/16W
R5057	301 225 1210	MT-GLAZE	4.7K JA	1/16W
R5060	301 225 1210	MT-GLAZE	4.7K JA	1/16W
R5061	301 224 8814	MT-GLAZE	100 JA	1/16W
R5062	301 225 0213	MT-GLAZE	3.3K JA	1/16W
R5063	301 224 9316	MT-GLAZE	1K JA	1/16W
R5064	301 224 8814	MT-GLAZE	100 JA	1/16W
R5066	301 225 0213	MT-GLAZE	3.3K JA	1/16W
R5067	301 224 9316	MT-GLAZE	1K JA	1/16W
R5069	301 150 6014	MT-GLAZE	0.000 ZA	1/10W
R507	301 226 1516	MT-GLAZE	0.000 ZA	1/16W
R5070	301 225 8011	MT-GLAZE	330 JA	1/16W
R5073	301 226 1516	MT-GLAZE	0.000 ZA	1/16W
R5075	301 224 9514	MT-GLAZE	2.2K JA	1/16W
R509	301 226 1516	MT-GLAZE	0.000 ZA	1/16W
R511	301 224 8814	MT-GLAZE	100 JA	1/16W
R512	301 224 8814	MT-GLAZE	100 JA	1/16W
R513	301 224 8814	MT-GLAZE	100 JA	1/16W

Key No.	Part No.	Description		
R5213	301 224 8814	MT-GLAZE	100 JA	1/16W
R5215	301 224 8814	MT-GLAZE	100 JA	1/16W
R5220	301 224 8814	MT-GLAZE	100 JA	1/16W
R5223	301 224 8814	MT-GLAZE	100 JA	1/16W
R530	301 226 1516	MT-GLAZE	0.000 ZA	1/16W
R531	301 224 8814	MT-GLAZE	100 JA	1/16W
R5317	301 225 1814	MT-GLAZE	47 JA	1/16W
R5318	301 225 0619	MT-GLAZE	5.6K JA	1/16W
R5331	301 240 9710	MT-GLAZE	820K JA	1/16W
R5332	301 224 9316	MT-GLAZE	1K JA	1/16W
R5333	301 224 9316	MT-GLAZE	1K JA	1/16W
R5334	301 224 9019	MT-GLAZE	10K JA	1/16W
R5336	301 224 9316	MT-GLAZE	1K JA	1/16W
R5337	301 224 9316	MT-GLAZE	1K JA	1/16W
R5338	301 226 2414	MT-GLAZE	560 JA	1/16W
R5342	301 225 0718	MT-GLAZE	56K JA	1/16W
R5343	301 224 9316	MT-GLAZE	1K JA	1/16W
R541	301 224 8814	MT-GLAZE	100 JA	1/16W
R542	301 224 8814	MT-GLAZE	100 JA	1/16W
R543	301 224 8814	MT-GLAZE	100 JA	1/16W
R546	301 226 1516	MT-GLAZE	0.000 ZA	1/16W
R560	301 226 1516	MT-GLAZE	0.000 ZA	1/16W
R5606	301 162 2219	MT-GLAZE	10 JA	1/10W
R561	301 224 8814	MT-GLAZE	100 JA	1/16W
R5611	301 224 8814	MT-GLAZE	100 JA	1/16W
R5613	301 225 2118	MT-GLAZE	12K JA	1/16W
R5615	301 224 9019	MT-GLAZE	10K JA	1/16W
R5616	301 225 1210	MT-GLAZE	4.7K JA	1/16W
R5617	301 225 3818	MT-GLAZE	1.5K JA	1/16W
R5627	301 190 1710	MT-GLAZE	0.000 ZA	1W
R5637	301 234 9917	MT-GLAZE	6.8K JA	1/16W
R5668	301 224 8814	MT-GLAZE	100 JA	1/16W
R5701	301 259 7823	MT-GLAZE	20K JA	1/16W
R5702	301 225 0718	MT-GLAZE	56K JA	1/16W
R5703	301 224 9019	MT-GLAZE	10K JA	1/16W
R5705	301 224 9019	MT-GLAZE	10K JA	1/16W
R5706	301 224 9019	MT-GLAZE	10K JA	1/16W
R5707	301 225 1210	MT-GLAZE	4.7K JA	1/16W
R571	301 224 8814	MT-GLAZE	100 JA	1/16W
R5712	301 253 3712	MT-GLAZE	0.000 ZA	1/4W
R572	301 224 8814	MT-GLAZE	100 JA	1/16W
R573	301 224 8814	MT-GLAZE	100 JA	1/16W
R5755	301 224 9019	MT-GLAZE	10K JA	1/16W
R5757	301 225 1210	MT-GLAZE	4.7K JA	1/16W
R5758	301 224 9019	MT-GLAZE	10K JA	1/16W
R5759	301 224 9316	MT-GLAZE	1K JA	1/16W
R5823	301 294 2613	MT-GLAZE	4.7K FA	1/16W
R5824	301 294 3511	MT-GLAZE	27K FA	1/16W
R5825	301 294 3016	MT-GLAZE	10K FA	1/16W
R5851	301 224 9019	MT-GLAZE	10K JA	1/16W
R5852	301 294 3214	MT-GLAZE	47K FA	1/16W
R5853	401 343 0512	MT-GLAZE	7.5K FA	1/16W
R5854	301 287 2227	MT-GLAZE	22K FA	1/16W
R5863	301 265 5711	MT-GLAZE	8.2K FA	1/10W
R5864	301 265 5711	MT-GLAZE	8.2K FA	1/10W
R5865	301 264 6511	MT-GLAZE	2.2K FA	1/10W
R5867	301 225 1418	MT-GLAZE	47K JA	1/16W
R595	301 225 1210	MT-GLAZE	4.7K JA	1/16W
R596	301 294 3016	MT-GLAZE	10K FA	1/16W
R597	301 294 4419	MT-GLAZE	1.8K FA	1/16W
R598	301 301 0410	MT-GLAZE	240 FA	1/16W
R599	301 224 9316	MT-GLAZE	1K JA	1/16W
R6801	301 225 0213	MT-GLAZE	3.3K JA	1/16W
R6803	301 224 9019	MT-GLAZE	10K JA	1/16W
R6804	301 225 0213	MT-GLAZE	3.3K JA	1/16W
R6806	301 224 9217	MT-GLAZE	15K JA	1/16W
R6807	301 234 9917	MT-GLAZE	6.8K JA	1/16W

Electrical Parts List

Key No.	Part No.	Description			
R6808	301 225 1517	MT-GLAZE	3.9K	JA	1/16W
R6809	301 225 0213	MT-GLAZE	3.3K	JA	1/16W
R6811	301 225 1517	MT-GLAZE	3.9K	JA	1/16W
R6812	301 225 0213	MT-GLAZE	3.3K	JA	1/16W
R6813	301 224 9019	MT-GLAZE	10K	JA	1/16W
R6822	301 224 9316	MT-GLAZE	1K	JA	1/16W
R6823	301 224 9019	MT-GLAZE	10K	JA	1/16W
R6841	301 224 8814	MT-GLAZE	100	JA	1/16W
R6844	301 225 1210	MT-GLAZE	4.7K	JA	1/16W
R6845	301 225 1210	MT-GLAZE	4.7K	JA	1/16W
R6846	301 224 9019	MT-GLAZE	10K	JA	1/16W
R6847	301 225 1210	MT-GLAZE	4.7K	JA	1/16W
R6848	301 225 1210	MT-GLAZE	4.7K	JA	1/16W
R6849	301 263 7420	MT-GLAZE	75	JA	1/16W
R6851	301 224 9019	MT-GLAZE	10K	JA	1/16W
R6853	301 229 3913	MT-GLAZE	180	JA	1/16W
R6854	301 224 9019	MT-GLAZE	10K	JA	1/16W
R6858	301 263 7420	MT-GLAZE	75	JA	1/16W
R6883	301 224 9019	MT-GLAZE	10K	JA	1/16W
R7801	301 225 1210	MT-GLAZE	4.7K	JA	1/16W
R7803	301 276 3010	MT-GLAZE	75K	JA	1/16W
R7805	301 225 1210	MT-GLAZE	4.7K	JA	1/16W
R7813	301 224 8913	MT-GLAZE	100K	JA	1/16W
R7816	301 225 1210	MT-GLAZE	4.7K	JA	1/16W
R7817	301 224 9019	MT-GLAZE	10K	JA	1/16W
R7818	301 299 4810	MT-GLAZE	2.7K	FA	1/16W
R7819	301 264 6115	MT-GLAZE	20K	FA	1/10W
R7820	301 225 8110	MT-GLAZE	10	JA	1/16W
R7821	301 294 2910	MT-GLAZE	560	FA	1/16W
R7824	301 301 8010	MT-GLAZE	1.5K	FA	1/16W
R7827	301 225 8110	MT-GLAZE	10	JA	1/16W
R7828	301 224 9019	MT-GLAZE	10K	JA	1/16W
R7829	301 224 9316	MT-GLAZE	1K	JA	1/16W
R7830	301 224 9019	MT-GLAZE	10K	JA	1/16W
R7831	301 224 9316	MT-GLAZE	1K	JA	1/16W
R7832	301 225 0213	MT-GLAZE	3.3K	JA	1/16W
R7833	301 224 9514	MT-GLAZE	2.2K	JA	1/16W
R7836	301 225 1517	MT-GLAZE	3.9K	JA	1/16W
R7839	301 225 1517	MT-GLAZE	3.9K	JA	1/16W
R7840	301 225 1517	MT-GLAZE	3.9K	JA	1/16W
R7841	301 336 8818	MT-GLAZE	6.8K	FA	1/16W
R7842	301 294 2811	MT-GLAZE	2.2K	FA	1/16W
R7843	301 225 1616	MT-GLAZE	390	JA	1/16W
R7844	301 224 9316	MT-GLAZE	1K	JA	1/16W
R7845	301 224 9316	MT-GLAZE	1K	JA	1/16W
R7846	301 225 0213	MT-GLAZE	3.3K	JA	1/16W
R7847	301 286 4717	MT-GLAZE	30K	JA	1/16W
R7848	301 224 9019	MT-GLAZE	10K	JA	1/16W
R7863	301 224 9316	MT-GLAZE	1K	JA	1/16W
R7865	301 225 1210	MT-GLAZE	4.7K	JA	1/16W
R7871	301 301 8010	MT-GLAZE	1.5K	FA	1/16W
R7872	301 294 2910	MT-GLAZE	560	FA	1/16W
R7873	301 264 6115	MT-GLAZE	20K	FA	1/10W
R7874	301 299 4810	MT-GLAZE	2.7K	FA	1/16W
R7878	301 224 9019	MT-GLAZE	10K	JA	1/16W
R7879	301 224 9316	MT-GLAZE	1K	JA	1/16W
R7881	301 224 9316	MT-GLAZE	1K	JA	1/16W
R7882	301 225 0213	MT-GLAZE	3.3K	JA	1/16W
R7883	301 224 9514	MT-GLAZE	2.2K	JA	1/16W
R8001	301 264 5316	MT-GLAZE	2.2	JA	1/10W
R8002	301 264 5316	MT-GLAZE	2.2	JA	1/10W
R8003	301 226 2414	MT-GLAZE	560	JA	1/16W
R8004	301 224 9415	MT-GLAZE	1M	JA	1/16W
R8008	301 225 1210	MT-GLAZE	4.7K	JA	1/16W
R8009	301 225 1210	MT-GLAZE	4.7K	JA	1/16W
R801	301 224 9019	MT-GLAZE	10K	JA	1/16W
R8014	301 225 1210	MT-GLAZE	4.7K	JA	1/16W
R8016	301 226 1516	MT-GLAZE	0.000	ZA	1/16W
R8018	301 225 1210	MT-GLAZE	4.7K	JA	1/16W
R8020	301 226 1516	MT-GLAZE	0.000	ZA	1/16W
R8022	301 225 1210	MT-GLAZE	4.7K	JA	1/16W
R8023	301 264 5316	MT-GLAZE	2.2	JA	1/10W
R8024	301 225 0312	MT-GLAZE	33	JA	1/16W
R8026	301 225 0312	MT-GLAZE	33	JA	1/16W
R8027	301 225 0312	MT-GLAZE	33	JA	1/16W
R8028	301 225 0312	MT-GLAZE	33	JA	1/16W
R8029	301 225 0312	MT-GLAZE	33	JA	1/16W
R8031	301 225 0312	MT-GLAZE	33	JA	1/16W
R8032	301 225 0312	MT-GLAZE	33	JA	1/16W
R8033	301 225 0312	MT-GLAZE	33	JA	1/16W
R8034	301 225 0312	MT-GLAZE	33	JA	1/16W
R8036	301 225 0312	MT-GLAZE	33	JA	1/16W
R8037	301 225 0312	MT-GLAZE	33	JA	1/16W
R8039	301 341 0616	MT-GLAZE	49.9	FA	1/16W
R804	301 224 9019	MT-GLAZE	10K	JA	1/16W
R8042	301 226 1516	MT-GLAZE	0.000	ZA	1/16W
R8043	301 225 1418	MT-GLAZE	47K	JA	1/16W
R8044	301 225 1418	MT-GLAZE	47K	JA	1/16W
R8045	301 240 9116	MT-GLAZE	5.6	JA	1/16W
R8046	301 240 9116	MT-GLAZE	5.6	JA	1/16W
R8047	301 240 9116	MT-GLAZE	5.6	JA	1/16W
R8048	301 240 9116	MT-GLAZE	5.6	JA	1/16W
R8049	301 341 0616	MT-GLAZE	49.9	FA	1/16W
R8051	301 240 9116	MT-GLAZE	5.6	JA	1/16W
R8052	301 240 9116	MT-GLAZE	5.6	JA	1/16W
R8053	301 240 9116	MT-GLAZE	5.6	JA	1/16W
R8054	301 240 9116	MT-GLAZE	5.6	JA	1/16W
R8056	301 225 1418	MT-GLAZE	47K	JA	1/16W
R8057	301 225 1418	MT-GLAZE	47K	JA	1/16W
R8059	301 341 0616	MT-GLAZE	49.9	FA	1/16W
R806	301 226 1516	MT-GLAZE	0.000	ZA	1/16W
R8064	301 150 6014	MT-GLAZE	0.000	ZA	1/10W
R8069	301 341 0616	MT-GLAZE	49.9	FA	1/16W
R807	301 224 9019	MT-GLAZE	10K	JA	1/16W
R808	301 224 9019	MT-GLAZE	10K	JA	1/16W
R8084	301 224 9316	MT-GLAZE	1K	JA	1/16W
R8088	301 150 6014	MT-GLAZE	0.000	ZA	1/10W
R809	301 294 4419	MT-GLAZE	1.8K	FA	1/16W
R8091	301 224 9019	MT-GLAZE	10K	JA	1/16W
R8101	301 225 1814	MT-GLAZE	47	JA	1/16W
R8102	301 226 1516	MT-GLAZE	0.000	ZA	1/16W
R8103	301 225 1814	MT-GLAZE	47	JA	1/16W
R812	301 225 0213	MT-GLAZE	3.3K	JA	1/16W
R8201	301 225 1814	MT-GLAZE	47	JA	1/16W
R8202	301 226 1516	MT-GLAZE	0.000	ZA	1/16W
R8204	301 225 1814	MT-GLAZE	47	JA	1/16W
R8206	301 263 7420	MT-GLAZE	75	JA	1/16W
R8207	301 263 7420	MT-GLAZE	75	JA	1/16W
R8208	301 226 5514	MT-GLAZE	120	JA	1/16W
R8209	301 226 5514	MT-GLAZE	120	JA	1/16W
R8211	301 226 5514	MT-GLAZE	120	JA	1/16W
R8243	301 225 0015	MT-GLAZE	270	JA	1/16W
R8244	301 225 0015	MT-GLAZE	270	JA	1/16W
R8245	301 225 0015	MT-GLAZE	270	JA	1/16W
R8311	301 224 9712	MT-GLAZE	22	JA	1/16W
R8312	301 226 1516	MT-GLAZE	0.000	ZA	1/16W
R8313	301 224 9712	MT-GLAZE	22	JA	1/16W
R8314	301 226 1516	MT-GLAZE	0.000	ZA	1/16W
R8316	301 226 1516	MT-GLAZE	0.000	ZA	1/16W
R8801	301 224 9316	MT-GLAZE	1K	JA	1/16W
R8802	301 226 1516	MT-GLAZE	0.000	ZA	1/16W
R8804	301 225 1210	MT-GLAZE	4.7K	JA	1/16W
R8805	301 224 9316	MT-GLAZE	1K	JA	1/16W
R8807	301 226 1516	MT-GLAZE	0.000	ZA	1/16W

Electrical Parts List

Key No.	Part No.	Description
R8808	301 226 1516	MT-GLAZE 0.000 ZA 1/16W
R8812	301 225 8110	MT-GLAZE 10 JA 1/16W
R8814	301 224 9415	MT-GLAZE 1M JA 1/16W
R8816	301 264 6511	MT-GLAZE 2.2K FA 1/10W
R8821	301 225 8110	MT-GLAZE 10 JA 1/16W
R8833	301 229 3913	MT-GLAZE 180 JA 1/16W
R8837	301 226 1516	MT-GLAZE 0.000 ZA 1/16W
R8838	301 226 1516	MT-GLAZE 0.000 ZA 1/16W
R8839	301 229 3913	MT-GLAZE 180 JA 1/16W
R8840	301 226 1516	MT-GLAZE 0.000 ZA 1/16W
R8841	301 224 9019	MT-GLAZE 10K JA 1/16W
R8843	301 224 9019	MT-GLAZE 10K JA 1/16W
R8844	301 224 9019	MT-GLAZE 10K JA 1/16W
R8846	301 224 8913	MT-GLAZE 100K JA 1/16W
R8850	301 253 3712	MT-GLAZE 0.000 ZA 1/4W
R8861	301 225 8110	MT-GLAZE 10 JA 1/16W
R8864	301 225 8110	MT-GLAZE 10 JA 1/16W
R8881	301 224 9019	MT-GLAZE 10K JA 1/16W
R9004	301 226 1516	MT-GLAZE 0.000 ZA 1/16W
R9005	301 226 1516	MT-GLAZE 0.000 ZA 1/16W
R9006	301 226 1516	MT-GLAZE 0.000 ZA 1/16W
R9007	301 224 9316	MT-GLAZE 1K JA 1/16W
R9008	301 224 8814	MT-GLAZE 100 JA 1/16W
R9009	301 224 8814	MT-GLAZE 100 JA 1/16W
R9010	301 224 8814	MT-GLAZE 100 JA 1/16W
R9014	301 226 1516	MT-GLAZE 0.000 ZA 1/16W
R9021	301 226 1516	MT-GLAZE 0.000 ZA 1/16W
R9022	301 226 1516	MT-GLAZE 0.000 ZA 1/16W
R9023	301 226 1516	MT-GLAZE 0.000 ZA 1/16W
R9028	301 224 9415	MT-GLAZE 1M JA 1/16W
R9029	301 224 9514	MT-GLAZE 2.2K JA 1/16W
R9035	301 226 1516	MT-GLAZE 0.000 ZA 1/16W
R9305	301 225 8110	MT-GLAZE 10 JA 1/16W
R9312	301 224 8913	MT-GLAZE 100K JA 1/16W
R9317	301 225 8110	MT-GLAZE 10 JA 1/16W
R9318	301 225 8110	MT-GLAZE 10 JA 1/16W
R9319	301 225 8110	MT-GLAZE 10 JA 1/16W
R9330	301 224 9019	MT-GLAZE 10K JA 1/16W
R9611	301 225 0213	MT-GLAZE 3.3K JA 1/16W
R9612	301 225 0213	MT-GLAZE 3.3K JA 1/16W
R9613	301 225 0213	MT-GLAZE 3.3K JA 1/16W
R9631	301 224 9316	MT-GLAZE 1K JA 1/16W
R9632	301 224 9019	MT-GLAZE 10K JA 1/16W
R9633	301 225 1210	MT-GLAZE 4.7K JA 1/16W
R9634	301 225 3818	MT-GLAZE 1.5K JA 1/16W
R9869	301 225 8110	MT-GLAZE 10 JA 1/16W
R9873	301 255 7312	MT-GLAZE 510K JA 1/10W
R9876	301 225 8110	MT-GLAZE 10 JA 1/16W
R9878	301 225 3818	MT-GLAZE 1.5K JA 1/16W
R9882	301 225 8110	MT-GLAZE 10 JA 1/16W
R9884	301 225 8110	MT-GLAZE 10 JA 1/16W
R9888	301 224 9316	MT-GLAZE 1K JA 1/16W
R9889	301 225 8110	MT-GLAZE 10 JA 1/16W
R9890	301 225 8110	MT-GLAZE 10 JA 1/16W
R9892	301 224 9019	MT-GLAZE 10K JA 1/16W
R9893	301 224 9019	MT-GLAZE 10K JA 1/16W
R9894	301 224 9019	MT-GLAZE 10K JA 1/16W
R9899	301 224 9712	MT-GLAZE 22 JA 1/16W
R9907	301 224 8814	MT-GLAZE 100 JA 1/16W
R9908	301 224 8814	MT-GLAZE 100 JA 1/16W
R9914	301 224 9019	MT-GLAZE 10K JA 1/16W
R9915	301 224 9019	MT-GLAZE 10K JA 1/16W
R9916	301 224 9019	MT-GLAZE 10K JA 1/16W
R9927	301 226 1516	MT-GLAZE 0.000 ZA 1/16W
R9928	301 224 9019	MT-GLAZE 10K JA 1/16W
R9929	301 225 0213	MT-GLAZE 3.3K JA 1/16W
RB2201	945 036 0986	R-NETWORK 47X4 1/32W
	945 037 0831	R-NETWORK 47X4 1/16W
RB2203	945 036 0986	R-NETWORK 47X4 1/32W
	945 037 0831	R-NETWORK 47X4 1/16W
RB2206	945 036 0986	R-NETWORK 47X4 1/32W
	945 037 0831	R-NETWORK 47X4 1/16W
RB2208	945 036 0986	R-NETWORK 47X4 1/32W
	945 037 0831	R-NETWORK 47X4 1/16W
RB2211	945 036 0986	R-NETWORK 47X4 1/32W
	945 037 0831	R-NETWORK 47X4 1/16W
RB2213	945 036 0986	R-NETWORK 47X4 1/32W
	945 037 0831	R-NETWORK 47X4 1/16W
RB301	945 018 8931	R-NETWORK 47X4 1/16W
	945 037 0671	R-NETWORK 47X4 0.063W
RB302	945 018 8931	R-NETWORK 47X4 1/16W
	945 037 0671	R-NETWORK 47X4 0.063W
RB303	945 018 8931	R-NETWORK 47X4 1/16W
	945 037 0671	R-NETWORK 47X4 0.063W
RB304	945 018 8931	R-NETWORK 47X4 1/16W
	945 037 0671	R-NETWORK 47X4 0.063W
RB306	945 018 8931	R-NETWORK 47X4 1/16W
	945 037 0671	R-NETWORK 47X4 0.063W
RB307	945 018 8931	R-NETWORK 47X4 1/16W
	945 037 0671	R-NETWORK 47X4 0.063W
RB308	945 018 8931	R-NETWORK 47X4 1/16W
	945 037 0671	R-NETWORK 47X4 0.063W
RB309	945 018 8931	R-NETWORK 47X4 1/16W
	945 037 0671	R-NETWORK 47X4 0.063W
RB311	945 018 8931	R-NETWORK 47X4 1/16W
	945 037 0671	R-NETWORK 47X4 0.063W
RB312	945 018 8931	R-NETWORK 47X4 1/16W
	945 037 0671	R-NETWORK 47X4 0.063W
RB313	945 018 8931	R-NETWORK 47X4 1/16W
	945 037 0671	R-NETWORK 47X4 0.063W
RB316	945 018 8931	R-NETWORK 47X4 1/16W
	945 037 0671	R-NETWORK 47X4 0.063W
RB317	945 018 8931	R-NETWORK 47X4 1/16W
	945 037 0671	R-NETWORK 47X4 0.063W
RB318	945 028 5982	R-NETWORK 10X4 1/16W
	945 037 3108	R-NETWORK 10X4 0.063W
RB321	945 018 8931	R-NETWORK 47X4 1/16W
	945 037 0671	R-NETWORK 47X4 0.063W
RB322	945 018 8931	R-NETWORK 47X4 1/16W
	945 037 0671	R-NETWORK 47X4 0.063W
RB331	945 036 0986	R-NETWORK 47X4 1/32W
	945 037 0831	R-NETWORK 47X4 1/16W
RB332	945 036 0986	R-NETWORK 47X4 1/32W
	945 037 0831	R-NETWORK 47X4 1/16W
RB333	945 036 0986	R-NETWORK 47X4 1/32W
	945 037 0831	R-NETWORK 47X4 1/16W
RB334	945 036 0986	R-NETWORK 47X4 1/32W
	945 037 0831	R-NETWORK 47X4 1/16W
RB336	945 036 0986	R-NETWORK 47X4 1/32W
	945 037 0831	R-NETWORK 47X4 1/16W
RB337	945 036 0986	R-NETWORK 47X4 1/32W
	945 037 0831	R-NETWORK 47X4 1/16W
RB411	945 037 0831	R-NETWORK 47X4 1/16W
RB412	945 037 0831	R-NETWORK 47X4 1/16W
RB413	945 037 0831	R-NETWORK 47X4 1/16W
RB414	945 037 0831	R-NETWORK 47X4 1/16W
RB416	945 037 0831	R-NETWORK 47X4 1/16W
RB417	945 037 0831	R-NETWORK 47X4 1/16W
RB418	945 037 0831	R-NETWORK 47X4 1/16W
RB419	945 037 0831	R-NETWORK 47X4 1/16W
RB421	945 037 0831	R-NETWORK 47X4 1/16W
RB422	945 037 0831	R-NETWORK 47X4 1/16W
RB423	945 037 0831	R-NETWORK 47X4 1/16W
RB424	945 037 0831	R-NETWORK 47X4 1/16W

Electrical Parts List

Key No.	Part No.	Description
RB426	945 037 0831	R-NETWORK 47X4 1/16W
RB427	945 037 0831	R-NETWORK 47X4 1/16W
RB428	945 037 0831	R-NETWORK 47X4 1/16W
RB429	945 037 0831	R-NETWORK 47X4 1/16W
RB431	945 037 0831	R-NETWORK 47X4 1/16W
RB432	945 037 0831	R-NETWORK 47X4 1/16W
RB433	945 037 0831	R-NETWORK 47X4 1/16W
RB434	945 037 0831	R-NETWORK 47X4 1/16W
RB436	945 037 0831	R-NETWORK 47X4 1/16W
RB437	945 037 0831	R-NETWORK 47X4 1/16W
RB501	945 036 3529	R-NETWORK 0X4 1/32W
	945 037 0817	R-NETWORK 0X4 1/16W
RB503	945 036 3529	R-NETWORK 0X4 1/32W
	945 037 0817	R-NETWORK 0X4 1/16W
RB504	945 036 3529	R-NETWORK 0X4 1/32W
	945 037 0817	R-NETWORK 0X4 1/16W
RB506	945 036 3529	R-NETWORK 0X4 1/32W
	945 037 0817	R-NETWORK 0X4 1/16W
RB531	945 036 3529	R-NETWORK 0X4 1/32W
	945 037 0817	R-NETWORK 0X4 1/16W
RB533	945 036 3529	R-NETWORK 0X4 1/32W
	945 037 0817	R-NETWORK 0X4 1/16W
RB534	945 036 3529	R-NETWORK 0X4 1/32W
	945 037 0817	R-NETWORK 0X4 1/16W
RB536	945 036 3529	R-NETWORK 0X4 1/32W
	945 037 0817	R-NETWORK 0X4 1/16W
RB561	945 036 3529	R-NETWORK 0X4 1/32W
	945 037 0817	R-NETWORK 0X4 1/16W
RB563	945 036 3529	R-NETWORK 0X4 1/32W
	945 037 0817	R-NETWORK 0X4 1/16W
RB564	945 036 3529	R-NETWORK 0X4 1/32W
	945 037 0817	R-NETWORK 0X4 1/16W
RB566	945 036 3529	R-NETWORK 0X4 1/32W
	945 037 0817	R-NETWORK 0X4 1/16W
RB8001	645 049 0675	R-NETWORK 33X4 1/32W
	945 049 0690	R-NETWORK 33X4 1/16W
RB8002	645 049 0675	R-NETWORK 33X4 1/32W
	945 049 0690	R-NETWORK 33X4 1/16W
RB8003	645 049 0675	R-NETWORK 33X4 1/32W
	945 049 0690	R-NETWORK 33X4 1/16W
RB8004	645 049 0675	R-NETWORK 33X4 1/32W
	945 049 0690	R-NETWORK 33X4 1/16W
RB8006	645 049 0675	R-NETWORK 33X4 1/32W
	945 049 0690	R-NETWORK 33X4 1/16W
RB8007	645 049 0675	R-NETWORK 33X4 1/32W
	945 049 0690	R-NETWORK 33X4 1/16W
RB8008	945 049 0690	R-NETWORK 33X4 1/16W
RB9881	945 028 0697	R-NETWORK 100X4 1/16W
COIL		
L001	652 002 8500	INDUCTOR 330OHM, P
L011	945 062 2855	INDUCTOR,33U M
L012	945 062 2855	INDUCTOR,33U M
L1002	945 086 7577	FILTER,EMI 400MHZ
L1012	945 086 7577	FILTER,EMI 400MHZ
L1022	945 086 7577	FILTER,EMI 400MHZ
L1051	945 086 7577	FILTER,EMI 400MHZ
L1061	945 086 7577	FILTER,EMI 400MHZ
L1071	945 086 7577	FILTER,EMI 400MHZ
L2210	945 036 3895	INDUCTOR,220 OHM
L2220	945 036 3895	INDUCTOR,220 OHM
L2221	945 036 3895	INDUCTOR,220 OHM
L2222	945 036 3895	INDUCTOR,220 OHM
L2303	945 086 6600	IMPEDANCE,220 OHM P
L2891	652 002 8524	INDUCTOR 220OHM, P
L2892	652 002 8685	INDUCTOR 1000OHM, P
L2893	652 002 8685	INDUCTOR 1000OHM, P
L2895	945 086 6037	IMPEDANCE,330 OHM P
L2896	945 086 6037	IMPEDANCE,330 OHM P
L2897	945 086 6037	IMPEDANCE,330 OHM P
L2898	945 086 6037	IMPEDANCE,330 OHM P
L2899	652 002 8685	INDUCTOR 1000OHM, P
L301	945 050 8449	IMPEDANCE,1000 OHM P
L302	945 050 8449	IMPEDANCE,1000 OHM P
L303	945 050 8449	IMPEDANCE,1000 OHM P
L304	945 050 8449	IMPEDANCE,1000 OHM P
L305	945 050 8449	IMPEDANCE,1000 OHM P
L306	945 050 8449	IMPEDANCE,1000 OHM P
L307	945 050 8449	IMPEDANCE,1000 OHM P
L308	945 050 8449	IMPEDANCE,1000 OHM P
L309	945 050 8449	IMPEDANCE,1000 OHM P
L310	301 150 6014	MT-GLAZE 0.000 ZA 1/10W
L311	945 050 8449	IMPEDANCE,1000 OHM P
L312	945 050 8449	IMPEDANCE,1000 OHM P
L313	945 050 8449	IMPEDANCE,1000 OHM P
L314	945 050 8449	IMPEDANCE,1000 OHM P
L3501	652 002 8500	INDUCTOR 330OHM, P
L3531	652 002 8500	INDUCTOR 330OHM, P
L3534	945 041 2210	INDUCTOR,0.12U K
L3561	652 002 8500	INDUCTOR 330OHM, P
L3620	652 002 8524	INDUCTOR 220OHM, P
L3621	652 002 8524	INDUCTOR 220OHM, P
L3622	652 002 8524	INDUCTOR 220OHM, P
L3624	652 002 8524	INDUCTOR 220OHM, P
L3626	652 002 8524	INDUCTOR 220OHM, P
L3627	652 002 8524	INDUCTOR 220OHM, P
L3630	652 002 8524	INDUCTOR 220OHM, P
L3631	652 002 8524	INDUCTOR 220OHM, P
L3632	652 002 8524	INDUCTOR 220OHM, P
L3633	652 002 8524	INDUCTOR 220OHM, P
L3634	652 002 8524	INDUCTOR 220OHM, P
L3635	652 002 8524	INDUCTOR 220OHM, P
L3636	652 002 8524	INDUCTOR 220OHM, P
L3637	652 002 8524	INDUCTOR 220OHM, P
L402	652 002 8500	INDUCTOR 330OHM, P
L4809	652 002 8685	INDUCTOR 1000OHM, P
L4810	652 002 8685	INDUCTOR 1000OHM, P
L4811	652 002 8685	INDUCTOR 1000OHM, P
L4812	652 002 8524	INDUCTOR 220OHM, P
L4813	652 002 8685	INDUCTOR 1000OHM, P
L4814	652 002 8685	INDUCTOR 1000OHM, P
L501	652 002 8500	INDUCTOR 330OHM, P
L502	652 002 8500	INDUCTOR 330OHM, P
L5031	652 002 8524	INDUCTOR 220OHM, P
L5032	652 002 8524	INDUCTOR 220OHM, P
L531	652 002 8500	INDUCTOR 330OHM, P
L532	652 002 8500	INDUCTOR 330OHM, P
L5331	301 037 5017	MT-GLAZE 0.000 ZA 1/10W
L5332	945 032 8344	INDUCTOR,39U J
L5602	945 040 6455	INDUCTOR,4.7U M
L5606	652 002 8500	INDUCTOR 330OHM, P
L5608	652 002 8500	INDUCTOR 330OHM, P
L5609	652 002 8500	INDUCTOR 330OHM, P
L561	652 002 8500	INDUCTOR 330OHM, P
L5611	652 002 8500	INDUCTOR 330OHM, P
L562	652 002 8500	INDUCTOR 330OHM, P
L5701	652 002 8500	INDUCTOR 330OHM, P
L5703	652 002 8500	INDUCTOR 330OHM, P
L5721	652 002 8524	INDUCTOR 220OHM, P
L5802	652 002 8500	INDUCTOR 330OHM, P
L5821	645 101 6683	INDUCTOR,4.7U M
L5822	652 002 8500	INDUCTOR 330OHM, P
L5825	652 002 8500	INDUCTOR 330OHM, P
L5826	652 002 8500	INDUCTOR 330OHM, P

Electrical Parts List

Key No.	Part No.	Description
L5828	652 002 8500	INDUCTOR 330OHM, P
L5832	652 002 8500	INDUCTOR 330OHM, P
L5842	652 002 8500	INDUCTOR 330OHM, P
L5851	652 002 8500	INDUCTOR 330OHM, P
L5861	645 101 6683	INDUCTOR,4.7U M
L5862	652 002 8500	INDUCTOR 330OHM, P
L5863	652 002 8500	INDUCTOR 330OHM, P
L5865	652 002 8500	INDUCTOR 330OHM, P
L5868	652 002 8500	INDUCTOR 330OHM, P
L7811	645 104 1159	INDUCTOR,15U M
L7861	645 104 1159	INDUCTOR,15U M
L8001	945 086 6600	IMPEDANCE,220 OHM P
L8002	945 086 6600	IMPEDANCE,220 OHM P
L8003	945 086 6600	IMPEDANCE,220 OHM P
L8004	945 086 6600	IMPEDANCE,220 OHM P
L8006	945 086 6600	IMPEDANCE,220 OHM P
L8007	945 086 6600	IMPEDANCE,220 OHM P
L8010	652 003 6499	INDUCTOR ,90 OHM
	645 092 3494	IMPEDANCE,90 OHM P
L8011	652 003 6499	INDUCTOR ,90 OHM
	645 092 3494	IMPEDANCE,90 OHM P
L8013	652 003 6499	INDUCTOR ,90 OHM
	645 092 3494	IMPEDANCE,90 OHM P
L8014	652 003 6499	INDUCTOR ,90 OHM
	645 092 3494	IMPEDANCE,90 OHM P
L8801	945 068 8318	FILTER,EMI 100MHZ
L8806	652 002 8500	INDUCTOR 330OHM, P
L8835	645 100 9340	IMPEDANCE,120 OHM P
L8836	645 100 9340	IMPEDANCE,120 OHM P
DIODE		
D011	307 247 8827	DIODE RF101L2S
D013	307 247 8827	DIODE RF101L2S
D1041	307 209 1214	ZD UDZS-TE-176.2B
	307 223 1115	ZENER DIODE 02DZ6.2Y(TPH3
	408 063 7507	ZENER DIODE MM3Z6V2B
D1042	307 209 1214	ZD UDZS-TE-176.2B
	307 223 1115	ZENER DIODE 02DZ6.2Y(TPH3
	408 063 7507	ZENER DIODE MM3Z6V2B
D1091	307 205 5216	DIODE RB521S-30-TE61
D1092	307 205 5216	DIODE RB521S-30-TE61
D2891	307 209 1214	ZD UDZS-TE-176.2B
	307 223 1115	ZENER DIODE 02DZ6.2Y(TPH3
	408 063 7507	ZENER DIODE MM3Z6V2B
D2892	307 209 1214	ZD UDZS-TE-176.2B
	307 223 1115	ZENER DIODE 02DZ6.2Y(TPH3
	408 063 7507	ZENER DIODE MM3Z6V2B
D2893	307 209 1214	ZD UDZS-TE-176.2B
	307 223 1115	ZENER DIODE 02DZ6.2Y(TPH3
	408 063 7507	ZENER DIODE MM3Z6V2B
D2894	307 209 1214	ZD UDZS-TE-176.2B
	307 223 1115	ZENER DIODE 02DZ6.2Y(TPH3
	408 063 7507	ZENER DIODE MM3Z6V2B
D3051	307 210 1923	DIODE 1SS400 TE-61
	307 235 0816	DIODE 1SS387 TPL3
D3601	307 210 1923	DIODE 1SS400 TE-61
	307 235 0816	DIODE 1SS387 TPL3
D3613	307 210 1923	DIODE 1SS400 TE-61
	307 235 0816	DIODE 1SS387 TPL3
D3614	307 210 1923	DIODE 1SS400 TE-61
	307 235 0816	DIODE 1SS387 TPL3
D3617	307 210 1923	DIODE 1SS400 TE-61
	307 235 0816	DIODE 1SS387 TPL3
D3621	307 210 1923	DIODE 1SS400 TE-61
	307 235 0816	DIODE 1SS387 TPL3
D3622	307 210 1923	DIODE 1SS400 TE-61
	307 235 0816	DIODE 1SS387 TPL3
D3623	307 210 1923	DIODE 1SS400 TE-61
	307 235 0816	DIODE 1SS387 TPL3
D3626	307 210 1923	DIODE 1SS400 TE-61
	307 235 0816	DIODE 1SS387 TPL3
D3627	307 210 1923	DIODE 1SS400 TE-61
	307 235 0816	DIODE 1SS387 TPL3
D3636	307 210 1923	DIODE 1SS400 TE-61
	307 235 0816	DIODE 1SS387 TPL3
D3637	307 210 1923	DIODE 1SS400 TE-61
	307 235 0816	DIODE 1SS387 TPL3
D3802	307 210 5416	DIODE RB551V-30-TE-17
D4802	307 210 1923	DIODE 1SS400 TE-61
	307 235 0816	DIODE 1SS387 TPL3
D4811	307 209 1214	ZD UDZS-TE-176.2B
	307 223 1115	ZENER DIODE 02DZ6.2Y(TPH3
	408 063 7507	ZENER DIODE MM3Z6V2B
D4812	307 209 1214	ZD UDZS-TE-176.2B
	307 223 1115	ZENER DIODE 02DZ6.2Y(TPH3
	408 063 7507	ZENER DIODE MM3Z6V2B
D4813	307 209 1214	ZD UDZS-TE-176.2B
	307 223 1115	ZENER DIODE 02DZ6.2Y(TPH3
	408 063 7507	ZENER DIODE MM3Z6V2B
D4816	307 209 1214	ZD UDZS-TE-176.2B
	307 223 1115	ZENER DIODE 02DZ6.2Y(TPH3
	408 063 7507	ZENER DIODE MM3Z6V2B
D5021	307 210 1923	DIODE 1SS400 TE-61
	307 235 0816	DIODE 1SS387 TPL3
D5061	307 210 1923	DIODE 1SS400 TE-61
	307 235 0816	DIODE 1SS387 TPL3
D5062	307 210 1923	DIODE 1SS400 TE-61
	307 235 0816	DIODE 1SS387 TPL3
D5602	307 210 5416	DIODE RB551V-30-TE-17
D5603	307 210 5416	DIODE RB551V-30-TE-17
D5622	307 210 1923	DIODE 1SS400 TE-61
	307 235 0816	DIODE 1SS387 TPL3
D5623	307 210 1923	DIODE 1SS400 TE-61
	307 235 0816	DIODE 1SS387 TPL3
D5624	307 210 1923	DIODE 1SS400 TE-61
	307 235 0816	DIODE 1SS387 TPL3
D591	307 210 1923	DIODE 1SS400 TE-61
	307 235 0816	DIODE 1SS387 TPL3
D592	307 210 1923	DIODE 1SS400 TE-61
	307 235 0816	DIODE 1SS387 TPL3
D6801	307 209 1214	ZD UDZS-TE-176.2B
	307 223 1115	ZENER DIODE 02DZ6.2Y(TPH3
	408 063 7507	ZENER DIODE MM3Z6V2B
D6802	307 209 1214	ZD UDZS-TE-176.2B
	307 223 1115	ZENER DIODE 02DZ6.2Y(TPH3
	408 063 7507	ZENER DIODE MM3Z6V2B
D6803	307 209 1214	ZD UDZS-TE-176.2B
	307 223 1115	ZENER DIODE 02DZ6.2Y(TPH3
	408 063 7507	ZENER DIODE MM3Z6V2B
D6831	408 068 5508	LED KPT-2012YC
D6832	408 071 8503	LED KPT-2012SRC-PRV
D6833	408 068 5201	LED KPTB-1612ESGC
D6841	307 209 1214	ZD UDZS-TE-176.2B
	307 223 1115	ZENER DIODE 02DZ6.2Y(TPH3
	408 063 7507	ZENER DIODE MM3Z6V2B
D6842	307 209 1214	ZD UDZS-TE-176.2B
	307 223 1115	ZENER DIODE 02DZ6.2Y(TPH3
	408 063 7507	ZENER DIODE MM3Z6V2B
D6843	307 209 1214	ZD UDZS-TE-176.2B
	307 223 1115	ZENER DIODE 02DZ6.2Y(TPH3
	408 063 7507	ZENER DIODE MM3Z6V2B
D6844	307 209 1214	ZD UDZS-TE-176.2B
	307 223 1115	ZENER DIODE 02DZ6.2Y(TPH3
	408 063 7507	ZENER DIODE MM3Z6V2B

Electrical Parts List

Key No.	Part No.	Description
D6850	307 210 1923	DIODE 1SS400 TE-61
	307 235 0816	DIODE 1SS387 TPL3
D6852	307 210 1923	DIODE 1SS400 TE-61
	307 235 0816	DIODE 1SS387 TPL3
D6853	307 210 1923	DIODE 1SS400 TE-61
	307 235 0816	DIODE 1SS387 TPL3
D6854	307 210 1923	DIODE 1SS400 TE-61
	307 235 0816	DIODE 1SS387 TPL3
D6855	307 210 1923	DIODE 1SS400 TE-61
	307 235 0816	DIODE 1SS387 TPL3
D6856	307 210 1923	DIODE 1SS400 TE-61
	307 235 0816	DIODE 1SS387 TPL3
D7812	407 272 1415	DIODE SS3P4-M3/84A
D7862	407 272 1415	DIODE SS3P4-M3/84A
D8091	407 272 1415	DIODE SS3P4-M3/84A
D8092	307 210 1923	DIODE 1SS400 TE-61
	307 235 0816	DIODE 1SS387 TPL3
D8093	307 210 1923	DIODE 1SS400 TE-61
	307 235 0816	DIODE 1SS387 TPL3
D8094	307 210 1923	DIODE 1SS400 TE-61
	307 235 0816	DIODE 1SS387 TPL3
D9881	307 209 1214	ZD UDZS-TE-176.2B
	307 223 1115	ZENER DIODE 02DZ6.2Y(TPH3
	408 063 7507	ZENER DIODE MM3Z6V2B
D9882	307 209 1214	ZD UDZS-TE-176.2B
	307 223 1115	ZENER DIODE 02DZ6.2Y(TPH3
	408 063 7507	ZENER DIODE MM3Z6V2B
D9883	307 209 1214	ZD UDZS-TE-176.2B
	307 223 1115	ZENER DIODE 02DZ6.2Y(TPH3
	408 063 7507	ZENER DIODE MM3Z6V2B
MISCELLANEOUS		
FB3620	945 086 6037	IMPEDANCE,330 OHM P
FB3621	945 086 6037	IMPEDANCE,330 OHM P
FB3622	945 086 6037	IMPEDANCE,330 OHM P
FB3624	945 086 6037	IMPEDANCE,330 OHM P
FB3626	945 086 6037	IMPEDANCE,330 OHM P
FB3627	945 086 6037	IMPEDANCE,330 OHM P
FB3633	945 086 6037	IMPEDANCE,330 OHM P
K10A	652 003 4945	SOCKET,HDMI 19P
K10B	652 003 3856	SOCKET,D-SUB 15P
K10C	652 003 3863	SOCKET,D-SUB 15P
K30B	652 002 6704	JACK,PHONE D3.6
K9602	645 093 6760	TRANS,PULSE
	652 003 2743	TRANS,PULSE
SC1031	945 076 3503	SURGE-ABSORBER
SC1041	945 076 3503	SURGE-ABSORBER
SC1081	945 076 3503	SURGE-ABSORBER
SC1091	945 076 3503	SURGE-ABSORBER
SC3001	945 076 3503	SURGE-ABSORBER
SC3011	945 076 3503	SURGE-ABSORBER
SC3021	945 076 3503	SURGE-ABSORBER
SC3031	945 076 3503	SURGE-ABSORBER
SC3051	945 076 3503	SURGE-ABSORBER
SC3061	945 076 3503	SURGE-ABSORBER
SC5031	945 076 3503	SURGE-ABSORBER
SC5032	945 076 3503	SURGE-ABSORBER
SC8001	945 076 3503	SURGE-ABSORBER
SC8002	945 076 3503	SURGE-ABSORBER
SW6801	952 001 8830	SWITCH,PUSH 1P-1TX1
	945 026 2792	SWITCH,PUSH 1P-1TX1
SW6802	952 001 8830	SWITCH,PUSH 1P-1TX1
	945 026 2792	SWITCH,PUSH 1P-1TX1
SW6803	952 001 8830	SWITCH,PUSH 1P-1TX1
	945 026 2792	SWITCH,PUSH 1P-1TX1
SW6804	952 001 8830	SWITCH,PUSH 1P-1TX1
	945 026 2792	SWITCH,PUSH 1P-1TX1
SW6806	952 001 8830	SWITCH,PUSH 1P-1TX1
	945 026 2792	SWITCH,PUSH 1P-1TX1
SW6807	952 001 8830	SWITCH,PUSH 1P-1TX1
	945 026 2792	SWITCH,PUSH 1P-1TX1
SW6808	952 001 8830	SWITCH,PUSH 1P-1TX1
	945 026 2792	SWITCH,PUSH 1P-1TX1
SW6810	952 001 8830	SWITCH,PUSH 1P-1TX1
	945 026 2792	SWITCH,PUSH 1P-1TX1
SW6811	952 001 8830	SWITCH,PUSH 1P-1TX1
	945 026 2792	SWITCH,PUSH 1P-1TX1
X1331	645 102 6934	OSC,CRYSTAL 27.000MHZ
X2202	945 076 2407	OSC,CRYSTAL 25.000MHZ
X5001	645 103 8722	OSC,CRYSTAL 12.288MHZ
X8001	645 102 6934	OSC,CRYSTAL 27.000MHZ
X8802	945 083 7556	OSC,CRYSTAL 25.0MHZ
X9001	645 103 6254	OSC,CRYSTAL 16.0MHZ
X9885	945 060 9900	OSC,CERAMIC 8.00MHZ

A1001 655 004 4228 ASSY,PWB,AV KC2AC

CAPACITOR				
C2051	303 294 6110	CERAMIC	100P J	50V
	303 454 0910	CERAMIC	100P J	50V
	303 453 6319	CERAMIC	100P J	50V
C2052	303 294 6110	CERAMIC	100P J	50V
	303 454 0910	CERAMIC	100P J	50V
	303 453 6319	CERAMIC	100P J	50V
RESISTOR				
R2001	301 260 4115	MT-GLAZE	75 JA	1/3W
R2015	301 260 4115	MT-GLAZE	75 JA	1/3W
R2025	301 260 4115	MT-GLAZE	75 JA	1/3W
R2051	301 224 8913	MT-GLAZE	100K JA	1/16W
R2052	301 224 8913	MT-GLAZE	100K JA	1/16W
MISCELLANEOUS				
K20A	652 002 8135	PLUG,D-SUB 9P		
K20B	645 089 9041	SOCKET,DIN 4P		
	952 001 4740	SOCKET,DIN 4P		
K50A	945 068 3740	JACK,RCA-3		
SC2001	945 076 3503	SURGE-ABSORBER		
SC2011	945 076 3503	SURGE-ABSORBER		
SC2021	945 076 3503	SURGE-ABSORBER		
SC2051	945 076 3503	SURGE-ABSORBER		
SC2052	945 076 3503	SURGE-ABSORBER		
SC2061	945 076 3503	SURGE-ABSORBER		
SC2062	945 076 3503	SURGE-ABSORBER		

A1002 655 004 4235 ASSY,PWB,RC KC2AC

INTEGRATED CIRCUIT				
IC8811	410 654 4802	IC ADT75BRMZ-REEL		
CAPACITOR				
C2901	403 455 1012	CERAMIC	1U K	10V
	303 433 1112	CERAMIC	1U K	10V
C2902	303 282 5118	CERAMIC	470P K	50V
	303 453 9211	CERAMIC	470P K	50V
	303 453 8719	CERAMIC	470P K	50V
C2903	303 370 0018	CERAMIC	10U K	6.3V
	303 368 7319	CERAMIC	10U K	6.3V
	303 358 3215	CERAMIC	10U K	6.3V
C8836	303 409 3426	CERAMIC	0.1U K	16V
	303 453 8610	CERAMIC	0.1U K	16V

Electrical Parts List

Key No.	Part No.	Description		
	303 453 8917	CERAMIC	0.1U K	16V
RESISTOR				
R2901	301 225 1814	MT-GLAZE	47 JA	1/16W
R2903	301 224 8814	MT-GLAZE	100 JA	1/16W
R8847	301 225 8110	MT-GLAZE	10 JA	1/16W
R8848	301 225 8110	MT-GLAZE	10 JA	1/16W
MISCELLANEOUS				
A2901	645 102 3773	UNIT,REMOCON RECEIVER		
A1003	**655 004 4242**	**ASSY,PWB,ID CONNECT KC2AC**		
RESISTOR				
R8738	301 226 1516	MT-GLAZE	0.000 ZA	1/16W
COIL				
L8731	945 086 6037	IMPEDANCE,330 OHM P		
L8732	945 086 6037	IMPEDANCE,330 OHM P		
L8733	945 086 6037	IMPEDANCE,330 OHM P		
L8734	945 086 6037	IMPEDANCE,330 OHM P		
L8737	945 086 6037	IMPEDANCE,330 OHM P		
A2200	**655 004 3313**	**ASSY,PWB,SUB POWER KA2AC**		
TRANSISTOR				
Q7803	305 002 8327	TR 2SA1203-Y-TE12L		
Q7804	305 002 8327	TR 2SA1203-Y-TE12L		
Q7805	305 015 8727	TR 2SC2812-L6-TB		
	305 015 8925	TR 2SC2812-L7-TB		
	305 163 1615	TR 2SC2812N-L6-TB0		
	305 173 9816	TR 2SC3928A1R		
	305 173 9915	TR 2SC3928A1S		
Q7806	305 015 8727	TR 2SC2812-L6-TB		
	305 015 8925	TR 2SC2812-L7-TB		
	305 163 1615	TR 2SC2812N-L6-TB0		
	305 173 9816	TR 2SC3928A1R		
	305 173 9915	TR 2SC3928A1S		
Q7807	305 015 8727	TR 2SC2812-L6-TB		
	305 015 8925	TR 2SC2812-L7-TB		
	305 163 1615	TR 2SC2812N-L6-TB0		
	305 173 9816	TR 2SC3928A1R		
	305 173 9915	TR 2SC3928A1S		
Q7811	305 128 9618	TR 2SC2411K-T146-Q		
Q7812	305 128 9618	TR 2SC2411K-T146-Q		
CAPACITOR				
C7801	403 485 9910	DL-ELECT	3.3F M	2.5V
C7802	403 485 9910	DL-ELECT	3.3F M	2.5V
C7803	403 485 9910	DL-ELECT	3.3F M	2.5V
C7804	403 485 9910	DL-ELECT	3.3F M	2.5V
C7805	303 396 9613	CERAMIC	1U K	25V
	303 397 7618	CERAMIC	1U K	25V
RESISTOR				
R7802	301 104 6015	MT-GLAZE	100 JA	1W
R7804	301 102 7519	MT-GLAZE	22 JA	1W
R7806	301 150 5918	MT-GLAZE	10K JA	1/10W
R7807	301 150 5918	MT-GLAZE	10K JA	1/10W
R7808	301 150 5918	MT-GLAZE	10K JA	1/10W
R7809	301 150 5918	MT-GLAZE	10K JA	1/10W
R7810	301 162 3711	MT-GLAZE	4.7K JA	1/10W
R7811	301 150 5918	MT-GLAZE	10K JA	1/10W
R7812	301 256 2613	MT-GLAZE	2.4K JA	1/10W
R7814	301 256 2613	MT-GLAZE	2.4K JA	1/10W
R7815	301 256 2613	MT-GLAZE	2.4K JA	1/10W
R7851	301 162 3612	MT-GLAZE	470 JA	1/10W
R7853	301 150 6212	MT-GLAZE	1K JA	1/10W
R7855	301 150 5918	MT-GLAZE	10K JA	1/10W
R7856	301 256 2613	MT-GLAZE	2.4K JA	1/10W
DIODE				
D7801	307 224 6515	ZD UDZS4.7B-TE-17		
D7802	307 224 6515	ZD UDZS4.7B-TE-17		
D7803	307 210 5416	DIODE RB551V-30-TE-17		
D7804	307 210 1111	ZENER DIODE UDZS7.5BTE-17		

Electrical Parts List

Key No.	Part No.	Description	Key No.	Part No.	Description

EIKI

A-key to better communications

(KC2BC) June 2011 Japan